the Crosby group®

PRODUCT CATALOG

with application & warning information

Metric

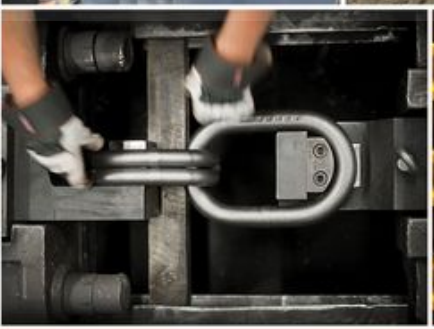

Crosby® Gunnebo Industries® Crosby Straightpoint® McKissick®
Crosby BlokCam® CrosbyIP® Crosby Feubo® Speedbinders®

GLOBAL HEADQUARTERS

RICHARDSON
2600 North Central Expwy
Richardson, TX 75080 USA

NORTH AMERICA FACILITIES

LONGVIEW
2414 Crosby Way
Longview, TX 75602 USA

TULSA
2801 Dawson Rd
Tulsa, OK 74110 USA

LITTLE ROCK
2511 West Main St
Jacksonville, AR 72076 USA

ARLINGTON
2101 Exchange Dr
Arlington, TX 76011 USA

MISSISSAUGA
3660 Odyssey Dr, #4
Mississauga, Ontario, Canada
L5M 7N4

LATIN AMERICA FACILITIES

SAO PAULO
Rua Guarani, 485, Vila Conceicâo
CEP 09991-060 Diadema, Sao Paulo

EUROPE FACILITIES

HEIST
Industriepark 26/B, 2220
Heist-op-den-Berg, Belgium

PUTTE
Leuvensebaan 51
2580, Putte, Belgium

EDE
Celsiusstraat 51, 6716 BZ
Ede, The Netherlands

GUNNEBO
Trådgatan 5
593 75, Gunnebo, Sweden

VÄXJÖ
Stinavägen 1
352 46, Växjö, Sweden

GOTHENBURG
Marieholmsgatan 44
415 02 Gothenburg, Sweden

LONEVÅG
Osterøyvegen 1328
N-5282, Lonevåg, Norway

ORNETA
Przemysłowa 43, 11-130
Orneta, Poland

HAMPSHIRE
123 Proxima Park, Houghton Ave
Waterlooville, Hants, PO7 3DU, UK

CRADLEY HEATH
Station St
Cradley Heath B64 6AJ, UK

DÜSSELDORF
Heerdter Lohweg 93
40549, Germany

JOIGNY
47, rue de la gare
08700, Joigny-sur-Meuse, France

ASIA PACIFIC FACILITIES

BRISBANE
Unit 1, 24 Gassman Dr
Yatala Qld 4207
Brisbane, Australia

PERTH
46 Goodwood Parade
Burswood WA 6100
Perth, Australia

CUSTOMER SERVICE

UNITED STATES
800-772-1500
crosbycustomerservice@thecrosbygroup.com

CANADA
877-462-7672
sales@crosby.ca

LATIN AMERICA & ASIA
+1 918-832-5036
internationalcs@thecrosbygroup.com

EUROPE, MIDDLE EAST & AFRICA
+32 1575 7125
salesbelgium@thecrosbygroup.com

UNITED KINGDOM
+44 1384 353 100
salesuk@thecrosbygroup.com

SWEDEN
+46 31-764-37 10
salessweden@thecrosbygroup.com

NORWAY
+47 561 933 00
sales.norway@thecrosbygroup.com

GERMANY
+49 2324 950 754
cs.germany@thecrosbygroup.com

SALES

Visit thecrosbygroup.com/saleslocator to find the local area sales manager for your region.

ENGINEERED SOLUTIONS

To learn more about our global Engineered Solutions group and submit a request for a custom project, visit thecrosbygroup.com/engineeredsolutions.

AUTHORIZED DISTRIBUTORS

Products manufactured by The Crosby Group are available globally through authorized distributors.

Contact your local authorized Crosby Group distributor for product availability, service and support.

Copyright © 2023 The Crosby Group LLC All Rights Reserved

LIMITED WARRANTY & LIMITATIONS OF LIABILITY

"Crosby" as used in these terms related to Crosby's Limited Warranty and Limitation of Liability means: the applicable product- or service-selling entity listed in the Order Acknowledgment issued to the Purchaser. For example, the product- or service-selling entity may be THE CROSBY GROUP LLC or a different product- or service-selling entity that is an affiliate of THE CROSBY GROUP LLC, including, without limitation, Gunnebo Industries; Speedbinders; The Crosby Group UK Limited; and Straightpoint UK Ltd. If there is any question as to the identity of "Crosby" or no Order Acknowledgment is issued, then THE CROSBY GROUP LLC (upon request) will specify the identity of "Crosby" as it relates to these terms.

Purchaser and Crosby expressly agree that Crosby's warranty with respect to sale of its products is LIMITED solely to Crosby's choice of repair, replacement or refund of the purchase price of any product or part thereof determined by Crosby to be defective within the first 12 months following the transfer of title of the product from Crosby to the purchaser. Installation or operation of the product in any manner other than as recommended by Crosby, shall void the warranty. No warranty is made for components and accessories made by others when such items are warranted by their respective manufacturer. Purchaser and Crosby expressly agree that upon termination of the aforementioned 12-month period, the purchased product carries no warranty whatsoever. Purchaser and Crosby expressly agree that the remedies provided in this section are the purchaser's exclusive remedies in connection with the purchase or use of the product.

Neither Purchaser, user nor any third party shall be entitled to recover from Crosby (1) any consequential, incidental, punitive, special or indirect damages of any nature, including but not limited to, the cost of any labor expended by others in connection with the goods sold by reason of any alleged non-conformity or breach of warranty on the part of Crosby or costs of material on account thereof, (2) damages of any kind for loss of profits, revenue, data or data use, or (3) damages of any kind for business interruption whether determinable or speculative, loss of business information, goodwill, reputation or privacy, (4), for costs of procuring substitute goods, software or services, incurred by Purchaser, user or any third party, however, arising, whether in an action in contract, tort, under statute or otherwise, and whether or not the possibility or likelihood of such damages were reasonably foreseeable.

ALL OTHER WARRANTIES, INCLUDING EXPRESS WARRANTIES AND THE IMPLIED WARRANTIES OF MERCHANTABILITY AND FITNESS FOR A PARTICULAR PURPOSE ARE HEREBY DISCLAIMED. ADDITIONALLY, CROSBY HEREBY DISCLAIMS ANY OF ITS OBLIGATIONS OR LIABILITIES ARISING FROM STATUTE, WARRANTY, CONTRACT, TORT OR NEGLIGENCE.

Complete Agreement: This Warranty between purchaser and Crosby is complete. All prior or contemporaneous discussions, representations and/or understandings are merged into this Warranty. All prior or contemporaneous agreements between the parties are superseded by this Warranty.

Choice of Law and Venue: If the applicable Crosby entity's principal place of business is not in Europe, then Purchaser and Crosby expressly agree that any dispute arising out of these terms and all disputes concerning or relating to the purchase, use or operation of the goods shall be governed by the laws of the State of Oklahoma, USA, excluding any conflicts-of-law rules, and any lawsuit shall be filed in Tulsa, Oklahoma, USA. If the applicable Crosby entity's principal place of business is in Europe, then Purchaser and Crosby expressly agree that any dispute arising out of these terms and all disputes concerning or relating to the purchase, use or operation of the goods shall be governed by the laws of England, excluding any conflicts-of-law rules, and any lawsuit shall be filed in London, England. If there is any question as to the location of Crosby's principal place of business, then (upon request) Crosby shall provide specify the location of Crosby's principal place of business.

DIGITAL CATALOG

Download the digital version of this catalog or order print copies at **thecrosbygroup.com/catalog**

SUPPLEMENTAL CATALOGS

Brand-specific catalogs for Gunnebo Industries and Crosby Straightpoint are available. For more information, visit **thecrosbygroup.com/catalog**

SHACKLES 1
LOAD MONITORING 2
CAMERA SYSTEMS 3
HOOKS & SWIVELS 4
MASTER LINKS 5
CHAIN & ACCESSORIES 6
WIRE ROPE END FITTINGS 7
ROV 8
SYNTHETIC SLING FITTINGS 9
TURNBUCKLES 10
LIFTING POINTS 11
LIFTING CLAMPS & MAGNETS 12
LOAD SECUREMENT 13
SHEAVES 14
BLOCKS 15
ENGINEERED SOLUTIONS 16
APPLICATIONS & WARNINGS 17
INDEX INDEX

DEFINITIONS

STATIC LOAD
The load resulting from a constant applied force or load.

WORKING LOAD LIMIT
The maximum mass or force that the product is authorized to support in general service when the pull is applied in-line, unless noted otherwise, with respect to the centerline of the product. This term is used interchangeably with the following terms: WLL, Rated Load Value, Resultant Working Load.

WORKING LOAD
The maximum mass or force that the product is authorized to support in a particular service.

PROOF LOAD
The average force applied in the performance of a proof test; the average force to which a product may be subjected before deformation occurs.

PROOF TEST
A test applied to a product solely to determine injurious material or manufacturing defects.

ULTIMATE LOAD
The average load or force at which the product fails or no longer supports the load. Interchangeable with Ultimate Strength.

SHOCK LOAD
A force that results from the rapid application of a force (such as impacting or jerking) or rapid movement of a static load. A shock load significantly adds to the static load.

DESIGN FACTOR
An industry term denoting a product's theoretical reserve capacity; usually computed by dividing the ultimate load by the Working Load Limit. Generally expressed as a ratio (for example, 5:1).

COMMERCIAL SURFACE QUALITY
The surface condition of the products shown in this catalog. The surface condition associated with the normal methods of production of raw material and machined surfaces. More refined surface qualities are considered as special.

FATIGUE RATED
Tested to a minimum standard of 20,000 cycles at 1.5 times the Working Load Limit. Will meet the requirements of the Euronorm standards for fatigue.

ADJUSTED WORKING LOAD LIMIT
The reduced maximum mass or force which the product is authorized to support for specific non-standard loading applications.

SHORT TON (T)
North American unit of measure that equals 2,000 lb. Abbreviated by capital T.

METRIC TON (t)
Metric unit of measure that equals 1,000 kg. Abbreviated by lower case t.

GENERAL CAUTIONS & WARNINGS

All products manufactured by Crosby are sold with the express understanding that the purchaser is thoroughly familiar with the safe and proper use and application of the product.

Responsibility for the use and application of the products rests with the user. Crosby disseminates products warnings and end user application information through various channels. In addition, Crosby provides formal product training seminars and our engineering personnel are readily available to answer your technical questions. For more information read the Crosby General Catalog, refer to Crosby's website at thecrosbygroup.com, or contact your Crosby distributor or Crosby direct at 918-834-4611.

Failure of the product can occur due to misapplication, abuse, or improper maintenance. Product failure could allow the load to become out of control, resulting in possible property damage, personal injury or death.
There are numerous government and industry standards that cover products made by Crosby. This catalog makes no attempt to reference all of them. We do reference the standards that are most frequently asked about.
Ratings shown in Crosby literature are applicable only to new or in "as-new" condition products.

Load Limit ratings indicate the greatest force or load a product can carry under usual environmental conditions. Shock loading and extraordinary conditions must be taken into account when selecting products for use in a system.

In general, the products displayed in Crosby literature are used as parts of a system being employed to accomplish a task. Therefore, we can only recommend within the Working Load Limit ("WLL"), or other stated limitations, the use of products for this purpose.

The WLL, or Design Factor, or Efficiency Rating of each Crosby product may be affected by wear, misuse, overloading, corrosion, deformation, intentional alteration, and other use conditions. Regular inspection must be conducted to determine whether use can be continued at the catalog assigned WLL, a reduced WLL, or whether the product must be withdrawn from service.

Crosby products are generally intended for tension or pull. Side-loading must be avoided because it exerts additional force or loading which the product is not designed to accommodate.

Welding Crosby load support parts or products can be hazardous. Knowledge of materials, heat treatment, and welding procedures are necessary for proper welding. Crosby should be consulted for information. The assigned Ultimate Load Rating of Crosby products for the reeving of wire, manila, or synthetic rope is based upon design; the catalog ultimate strength for the rope parts, when totaled, may exceed the assigned Ultimate Load Rating.

The WLL of a sling must not exceed the lowest WLL of the components in the system. The recommended Proof Load on all items in this catalog is 2 times the WLL unless otherwise shown. Products that Crosby intends for swaging are identified in this catalog. For proper swaging machine training, operations and die selection, refer to specific product section in this manual. To develop other product for swaging requires knowledge of materials, heat treatment, product design, die design and performance of the final product. Use only new genuine Crosby parts as replacements when servicing or repairing Crosby products. Crosby products are to be considered as sparking, unless otherwise noted.

Two decimal and fractional dimensions shown in catalog are intended as nominal dimensions only. If three decimal dimensions are shown, contact Crosby for tolerance information.

Product Label Replacement: In accordance with ANSI Z535.4, Product Safety Labels should be periodically inspected and cleaned. Product Safety Labels should be replaced when they are no longer legible. Current Crosby warning and application labels, for applicable products, are available from Crosby.

Warning and application instructions for specific products are included in Section 17 of this catalog. The graphic below will appear on product pages for which this information can be found:

APPLICATION AND WARNING INFORMATION
SECTION 17

Copyright © 2023 The Crosby Group LLC All Rights Reserved

ABBREVIATIONS

Below are common symbols that appear on product pages within The Crosby Group catalog:

C = Carbon
A = Alloy
B = Bronze
L = Hook supplied with latch kit

SS = Stainless steel
S or SC = Self colored, painted, or oiled
G = Coated for corrosion protection; may include hot dip galvanizing, electrolytic depositing, dimetcoted, impact galvanizing, spraying, etc.

All ratings given in tons refer to short tons of 2,000 lbs. Ratings given in metric tons equal 2,204 lbs, and are mentioned as "tonnes" (t) or "metric tons." Hot-dip galvanized Crosby products meet or exceed ASTM A 153 requirements.

SYMBOLS & EXPLANATIONS

Below are common symbols that appear on product pages within The Crosby Group catalog:

QUIC-CHECK® is a patented concept developed by The Crosby Group's research and development department that represents Crosby's ongoing commitment to quality. QUIC-CHECK incorporates the strategic placement of marking indicators on traditional rigging hardware to indicate reference points designed to enhance the safe and proper use of Crosby products.

Load Rated® is a registered Crosby trademark that identifies products that have the Working Load Limit indicated or affixed to them.

Fatigue Rated® is a registered Crosby trademark that identifies products that have proven to provide improved fatigue life (fatigue resistance) in actual use.

Quenched & Tempered® is a registered Crosby trademark that identifies products that are heat treated utilizing Crosby's perfected quench and tempering methods.

MAXTOUGH® is a registered Crosby trademark identifying products that are statistically verified to meet or exceed impact values of 42 Joules at -20° C (31 ft•lbf at -4° F) based on a high level of confidence. The confidence level is an index of certainty.

The CE marking is an administrative marking with which the manufacturer or importer affirms its conformity with European health, safety, and environmental protection standards for products sold within the European Economic Area (EEA).

The IECEx symbol indicates a product is approved by the International Electrotechnical Commission and meets certification to standards relating to equipment for use in explosive atmospheres.

This symbol indicates The Crosby Group's Engineered Solutions department provides custom-designed variations of the product to meet your specific project requirements. Engineered Solutions designs simple variations of off-the-shelf products, as well as fully custom solutions for challenging applications.

Type Approved is a symbol that identifies products that have been type approved by a third party organization. Meeting a standard can be declared as a result of Type Approval by a third party organization. Type Approval requires:

1. A **Type Approval certificate** that verifies that the product design complies with the referenced standard(s) and,
2. A **manufacturing survey (MSA)** that verifies that the manufacturing location has been verified as capable of making the product.
3. A **product certificate** must be made available that verifies that the product shipped meets the requirements of the Type Approval and MSA. This product certificate must reference a serial number or PIC and is issued for each product produced.

Low Temperature Service

Crosby forged and cast steel products can be used in general service conditions down to temperatures of -40° F (-40° C). McKissick blocks can be used in general service conditions down to temperatures of -4° F (-20° C). At temperatures from 0° F to -40° F (-18° C to -40° C), good rigging practice requires special attention in the following areas.

1. Lifting should be performed at a steady rate. Shock loading should be avoided.
2. Equipment containing bearings should have increased inspection and maintenance schedule, and may require special lubrication.
3. All lifting equipment should be given a thorough visual inspection before each lift.
4. Remove nicks, gouges, or cracks by grinding (5% maximum material removal).
5. Do not use fittings that have been welded or modified after leaving the factory.
6. If determined to be necessary by the user, lifting equipment should undergo periodic inspection by dye penetrant or magnetic particle
7. surface inspection.

For operation at temperatures below -40° F (-40° C), consider "Cold Tuff" products or contact Crosby Engineering.

Elevated Temperature Service

Crosby forged and cast steel products can be used in general service conditions up to temperatures of 400° F (204° C). The following should be considered when operating up to temperatures of 400 ° F (204° C).

1. Products that contain non-ferrous materials, and lubricants, plastics, etc. may be adversely affected by high temperatures, and typically should not exceed 200° F (93° C).
2. Galvanized, plated or painted fittings may suffer some or total degradation of the surface finish.
3. Extended exposure to elevated temperatures can cause severe surface scaling and significant permanent reduction of properties.
4. Repeated heating and cooling to room temperatures can result in temper embrittlement.

For other operating temperatures or products, contact Crosby Engineering.

Copyright © 2023 The Crosby Group LLC All Rights Reserved

THERE IS NO EQUAL

When you choose The Crosby Group, you choose quality. No other rigging, lifting, and securement hardware manufacturer delivers more trusted product solutions, education, and service as close to the point of use. If the contract reads, 'Crosby or equal,' remember... there is no equal.

The Crosby Group is built upon:

- **Engineering & manufacturing excellence**
- **Unmatched quality & dependability**
- **World-class training programs**
- **Exceptional service & technical support**
- **Risk management tools & resources**
- **The broadest product portfolio in the industry**
- **Global distribution network with local support**

ISO 9001:2015
Since 2006

CÔNG TY CỔ PHẦN PHÁT TRIỂN KINH TẾ ĐÔNG NAM Á
ASEAN JSC.VN
ASEAN DEVELOPMENT JOINT STOCK COMPANY
ISO 9001:2015
Since 2003

COMPLETE WIND PROJECTS ON TIME & WITHIN BUDGET

Partner with the leading rigging provider with the most comprehensive product portfolio, training opportunities & local support

Keep your project on track through improved job site efficiency and safety with lifting and rigging hardware from The Crosby Group.

- Get the product you need, when you need it through a global network of 3,000+ authorized distributors with stock ready to ship.
- Ensure a well-trained workforce with access to extensive training curriculum and industry experience.
- Reduce time between lifts with quick-release shackle bolt securement and an adjustable, lightweight chain sling system.
- Prevent incidents through the use of top-quality hardware from a highly vertically integrated manufacturer.
- Create smarter lift plans with center of gravity calculations using wireless load cells.
- Obtain product authenticity certificates online at any time.

VISIT OUR NEW WIND WEBSITE

- On-demand wind webinars
- Wind training course details
- Product information

thecrosbygroup.com/wind

the Crosby group

CÔNG TY CỔ PHẦN ĐẦU TƯ PHÁT TRIỂN KINH TẾ ĐÔNG NAM Á
ASEAN JSC VN
ASEAN DEVELOPMENT JOINT STOCK COMPANY
ISO 9001:2015
Since 2008

No other manufacturer in the industry can deliver the added value that you receive when you choose The Crosby Group

ENGINEERING & MANUFACTURING EXCELLENCE

The Crosby Group boasts a global team of leading engineering experts, modern facilities, and state-of-the-art processes that deliver unique and extensive capabilities to provide the highest quality products on the market. Our Product Identification Code (PIC) traceability system helps ensure proper controls are maintained throughout the entire manufacturing process, from raw material to finished goods.

UNMATCHED QUALITY & DEPENDABILITY

Our products provide consistent performance and enhanced material strength, ductility, and resilience because of careful selection of raw material and the most scientifically sophisticated heat treatment and quality control processes.

WORLD-CLASS TRAINING PROGRAMS

The Crosby Group is known for its world-class training program. Since 1991, we have trained more than 500,000 people through our in-person seminars, on-site safe rigging clinics, and self-paced online courses.

EXCEPTIONAL SERVICE & TECHNICAL SUPPORT

Customer service begins with product availability, a seamless order-placing process, and support after the sale. At The Crosby Group, delivering exceptional service is a company-wide initiative driven by all of our teams, including customer service, technical support, sales, distributor support, engineered solutions, marketing, product management, and training departments.

RISK MANAGEMENT TOOLS & RESOURCES

We provide the most comprehensive product literature, in-person and online training in the industry. Many Crosby Group products are individually bagged or tagged with warning and proper application information to help users control and manage factors of uncertain hazards.

THE BROADEST PRODUCT PORTFOLIO IN THE INDUSTRY

With leading brands, including Crosby, Gunnebo Industries, Crosby Straightpoint, McKissick, Crosby IP, Crosby Feubo, and Speedbinders, The Crosby Group is the leading source of rigging, lifting, and securement hardware. Our Engineered Solutions group is also available to work with you on custom product designs to meet your specific requirements.

GLOBAL DISTRIBUTION NETWORK WITH LOCAL SUPPORT

Our global network of more than 3,000 authorized distributors means you have access to local stock, ready to ship, and local service worldwide. No one else can provide more support closer to the point of use than The Crosby Group.

Copyright © 2023 The Crosby Group LLC All Rights Reserved

THIRD PARTY CERTIFICATION

ISO 9001 certification provides you:

- **Third party certification** that The Crosby Group meets the rigorous requirements of ISO 9001.
- **Third party proof** that Crosby's quality assurance system is ongoing through a comprehensive audit program.
- **Third party proof** that Crosby meets the high standards of design, manufacture, and service now demanded by global markets.
- **Manufacturing accountability** at all of Crosby's facilities. This, in addition to Crosby's comprehensive traceability system (PIC) and our material verification program, provides total accountability.
- **Audit savings**. Sourcing from Crosby saves you time and costs associated with your audits or third party audits because, by being ISO 9001 certified, Crosby is regularly audited by a third party.
- **Global competitiveness**. Sourcing from Crosby positions you to be competitive in more markets throughout the world. Many major end users who operate internationally require their suppliers be ISO 9000 certified or offer products that are produced by an ISO 9001-certified source.
- **A long-term partner**. Crosby's ability to meet ISO 9001 standards and to maintain third party certification makes it clear that The Crosby Group is a long-term partner you can depend on to provide the needed product at required performance levels.
- **Support**. The Crosby Group will support committed distributors in their efforts to define and accomplish what is needed for them to attain ISO 9002 certification.

DNV

MANAGEMENT SYSTEM CERTIFICATE

This is to certify that the management system of
Crosby Group LLC - Crosby Tulsa
2957 Dawson Road, Tulsa, OK, 74101, USA
and the sites as mentioned in the appendix accompanying this certificate

has been found to conform to the Quality Management System standard:
ISO 9001:2015

This certificate is valid for the following scope:
Sales, Design Engineering, Purchasing and Manufacturing of Fittings for Chain and Wire Rope, Swage Fittings and Presses, Blocks, Tackle, Sheaves, Standard and Custom Lifting Clamps used in Material Handling Systems for Construction, Energy, Industrial and Marine Applications

Third party certification by product provides one or more of the following services:

- Inspection
- Certification Service
- Testing Service

This certification can be confirmed to their standards, the customer's standards, or the manufacturer's own standards. If requested at time of order, The Crosby Group will work with you to certify any of our products to any third party organization.

TYPE APPROVED PRODUCTS

Several Crosby products have been Type Approved by various third party organizations.

Type Approval requires:

1. A **Type Approval certificate** that verifies that the product design complies with the referenced standard(s) and,
2. A **manufacturing survey (MSA)** that verifies that the manufacturing location has been verified as capable of making the product.
3. A **product certificate** must be made available that verifies that the product shipped meets the requirements of the Type Approval and MSA. This product certificate must reference a serial number or PIC and is issued for each product produced.

Order our popular training resources online

- Rigging seminar workbooks
- Users Guide for Lifting pocket cards
- Wall charts
- Catalogs

Shop now at:
thecrosbygroup.com/training

Copyright © 2023 The Crosby Group LLC All Rights Reserved

Ensure only genuine Crosby Group products are being used on your job site

Access and verify the authenticity of certificates for your Crosby Group products – all online

COMPANY WITH QUALITY SYSTEM CERTIFIED BY DNV GL

Crosby
2801 Dawson Rd
Tulsa, OK 74110
thecrosbygroup.com

Certificate of Conformance

Certificate Number: CC1-2021071219204
Location of Issue: ABC Rigging & Lifting
100 W. 3rd St.
Houston, TX 77001 USA
Phone: 713-555-0022

Stock No: 1019515
Description of Gear: G2130 4-3/4t Bolt Type Anchor Shackle 3/4" Maxtough®
Working Load Limit: 4-3/4t | Max. Allowed Proof Load: 9-1/2t | t indicates metric tons
Comments: 6:1 Design Factor
Note: Meets the performance requirements of Federal Specification RR-C-271G Type IVA, Grade A, Class 3, except for those provisions required of the contractor.
Meets or exceeds all requirements of ASME B30.26.
Crosby forged shackles can be used in general service with good rigging practice down to temperatures of -40 °F (-40 °C).
Has not been contaminated by Mercury or Asbestos in the manufacturing process.
Number of Pieces: 16 Bow: 6VC Distributor Note: 2R-4541 to 2R-4556
PICs are based on visual observation
Certificate based on item being the Crosby product described above.

Mentioned products are in conformity to the Crosby literature available at the time of the manufacturer. We hereby certify that the above described material was manufactured and processed in a manner compatible to meeting the specified load ratings when used under normal and proper applications. This product at the time of manufacture does not contain any ozone-depleting substances.

This product at the time of manufacture does not exceed the threshold for any of the hazardous listed chemicals in Appendix 1 of MEPC.269(68) 2015 Guidelines.

Load Rated Fatigue Rated MAXTOUGH ABS CE

For Product Delivered To: LIFTING PLUS
TULSA, OK 74110
USA

Supplier (Distributor) Order Number: 2021-0475
Customer (User) Order Number: 8300 055360

Date: September 15, 2021
Date of Issuance

Signature: Michael Gill, Crosby Director of Quality

3 key questions about the authenticity of your product:

1. **Did you buy from an authorized Crosby Group distributor?** It's important to only purchase product through authorized distributors. Our global network of authorized distributors are poised to provide you local support and the many value added services available from The Crosby Group.

2. **Did you receive a Certificate of Conformance?** Always require a Certificate of Conformance to provide assurance you are purchasing authentic Crosby products. These certificates include the item's Product Identification Code (PIC) and additional important information.

   Your authorized distributor can generate Certificates of Conformance online through Crosby CertPro® at thecrosbygroup.com/certpro.

   Other certificates are also available through Crosby CertPro, including Material Certificates and Type Approval Certificates.

3. **Did you validate the Crosby CertPro certificate?** If you have any questions about the authenticity of a Crosby CertPro certificate, you can verify it online yourself through Crosby VerificationPro® at thecrosbygroup.com/verificationpro

CERT PRO®

For authorized distributors to access and generate customer certificates.
thecrosbygroup.com/certpro

VERIFICATION PRO®

For anyone looking to verify the authenticity of a Crosby certificate.
thecrosbygroup.com/verificationpro

Gunnebo Industries certificates are now available on CertPro and VerificationPro.

Copyright © 2023 The Crosby Group LLC All Rights Reserved

WORLD STANDARDS

ISO 9001

The International Standardization Organization (ISO) brought standardization to the international level in 1987 by defining three levels of quality assurance. These are ISO 9001, ISO 9002, and ISO 9003.

ISO 9001 is the most comprehensive level. This level involves design, development, production, and shipping. A total of 20 quality system elements apply to ISO 9001. ISO 9001 requires that all procedures, work instructions, processes and related activities be documented. Certification to ISO 9001 requires a third party audit of all facilities prior to attainment and ongoing auditing every six months.

Certification to ISO 9001 is a solid foundation for transparency. Attainment of ISO 9001 forms the basis for meeting other world standards and provides customers with documented proof of the organization's ability to consistently provide product quality and performance. Adherence to ISO 9001 is a major element of purchasing contracts throughout the world.

Questions to ask your rigging provider

Do they meet ISO 9001 standards?

Are they an ISO 9001 certified company or have an implementation schedule?

If not, how willthey support the future needs of international companies and the Department of Defense?

What other world standards of performance to they meet?

Why choose Crosby

The Crosby Group makes the commitment and investment needed to attain ISO 9001 certification to support the needs of our distributors and end users.

Crosby facilities worldwide have been awarded certification for our Quality Assurance Program according to ISO 9001 by DET NORSKE VERITAS (DNV).

The criteria outlined by ISO 9001 have been adopted by the company through our ongoing quality programs. Quality has been built into our products and corporate philosophy from the beginning.

AMERICAN PETROLEUM INSTITUTE

The American Petroleum Institute (API) provides third party certification for products used in the oil field and other petroleum related activities. It provides quality assurance certification under the API-Q1 program. Manufacturers who meet the criteria qualify to manufacture under the API-Q1 program and utilize the API monogram. The API also provides design and manufacturing criteria for API-8C. All oil field blocks should meet API-8C criteria.

Questions to ask your rigging provider

Are they certified to API-Q1?

Do they have the capability to meet API-8C when required?

Why choose Crosby

McKissick is certified under API-Q1 to manufacture blocks and sheaves for use in the oil field. All oil field blocks are designed and manufactured to API-8C requirements.

OTHER WORLD STANDARDS

American Bureau of Shipping (ABS)
Lloyds Register of Shipping (Lloyd's)
DET NORSKE VERITAS (DNV)
Association of Belgian Industry for Safety and Health (AIB-VINÇOTTE) (AV) (VGS)
Control Organization of German Industry for Safety and Health (DIN)
Netherland Labor Inspection (AI)
Nuclear Regulatory Commission (NRC)
Defense Contract Administration Services Management Area (DCAS)
Registro Italiano Navale (RINA)

Questions to ask your rigging provider

What world standards are they familiar with?

Can they demonstrate the ability to meet these standards when needed?

Do they have the quality systems and product peformance needed to document adherence to these standards?

Why choose Crosby

Crosby has demonstrated capability in various countries and with many products. Crosby actively participates in standards-setting committees in both the United States and Europe and has frequently certified shackles, sheaves, blocks, and hooks to various world standards when required.

CAD DRAWINGS

Download 2D DWG and 3D STEP files for most products from The Crosby Group website.

thecrosbygroup.com/CAD

theCrosbygroup

Account required.

Copyright © 2023 The Crosby Group LLC All Rights Reserved

MATERIAL PROPERTIES

PROCESS

The material used in a forged fitting, such as carbon or alloy steel, determines the potential properties. The manufacturing processes determine what the properties will actually be. The material must be special bar forging quality steel and fine grained. The heating of steel to forging temperature must be properly controlled to ensure that the steel is not 'injured' by overheating. Proper forging equipment and techniques must be employed to assure proper material flow in the dies and tooling. The heat treatment process must be well defined and precisely controlled.

Questions to ask your rigging provider

What processes do they consider important, and how do they select their material?

Is the steel fine grained?

Are standards established to ensure sufficient cleanliness of the steel?

Why choose Crosby

The Crosby Group's attention to material selection, forging techniques, machining, and heat treatment processes assures the properties required will be attained, thus providing superior performance of the product. Crosby has specific and demanding cleanliness requirements.

TENSILE STRENGTH & DUCTILITY

The mechanical properties that are important when lifting a load under normal conditions are tensile strength and ductility. The ability to carry a load increases with the tensile (pulling) strength of the steel. The ability of steel to deform in an overload condition is known as its ductility.

Both of these factors enter greatly into determining the working load limit of a forging. Ductility is measured by standard engineering tests of elongation and reduction of area. It is also measured by how much deformation the fitting incurs when overloaded. The tensile strength determines the actual working load, while ductility allows the product to deform significantly when overloaded, thus giving warning before ultimate failure.

Questions to ask your rigging provider

Do they have an active program to determine tensile and ductility properties?

Are testing audits performed continuously on all products?

Is the actual deformation of a fitting when overloaded a major consideration for their shackles?

Why choose Crosby

The Crosby Group has an active program to determine tensile and ductility properties, and testing audits are continuously performed on all products. Crosby's design philosophy considers the deformation of a fitting when loading is a key requirement.

FATIGUE PROPERTIES

The mechanical properties of steel when a load is repeatedly applied is known as its fatigue strength. Fatigue testing determines the ability of a material to withstand repeated applications of a load. The load by itself may be too small to produce a failure. There are three factors involved when considering fatigue strength: the number of cycles at which a crack initiates, the number of cycles at which the crack starts to grow, and the number of cycles at which the fitting fails. One accepted method of fatigue rating fittings is to test them to 1-1/2 times the working load limit for 20,000 cycles, without failure. This standard test is accepted as indicating indefinite life when used within the working load limit under normal circumstances.

Questions to ask your rigging provider

Does the material selection process recognize fatigue properties?

Do they have an active program to design and test fatigue properties?

Is there a program in place to fatigue rate all load-bearing products that are used in critical applications?

Why choose Crosby

Crosby has an active program to determine fatigue properties. Included in this program is the use of finite element design methods to predict possible weak areas, which in turn allows us to design in superior fatigue properties.

Crosby specifies material of specific cleanliness and guaranteed hardenability which enhances fatigue. We design and manufacture products with fatigue in mind and ensure all load-bearing products used in critical applications being fatigue rated.

IMPACT PROPERTIES

The mechanical properties of steel when a load is rapidly applied is known as its impact strength. Impact tests are made by applying a sudden load to a test piece and measuring the energy absorbed when the specimen breaks. The tougher the material, the greater the energy required to break the piece. A brittle piece can absorb virtually no energy upon breaking. The Charpy V Notched Impact test is one common method of performing the testing and measurement. Fittings must be able to have impact strengths that match the requirements of their application at all temperatures, even low temperatures commonly found in winter conditions. The difficulty of crack initiation and crack growth under impact is an important consideration.

Questions to ask your rigging provider

Does the material selection process recognize impact properties?

Do they have an active program to perform actual testing of impact properties?

Do they recognize the need for good impact properties?

Why choose Crosby

Crosby recognizes the importance of impact properties and has an active program to determine impact properties at various temperatures of each material used in the various heat treat conditions.

Our products are designed to be used in a wide range of temperatures. Crosby specifies material of specific cleanliness and guaranteed hardenability which enhances fatigue and impact properties.

PERFORMANCE

Performance of a fitting requires a tensile strength that meets working load limits, ductility that allows deformation when overloaded, fatigue properties that support repeated use, and impact properties that provide toughness. All of these properties are essential if the product is to perform time after time in adverse conditions. They are also important to assure that the inspection criteria set forth by ANSI will effectively monitor the ability of the fitting to continue in service.

Questions to ask your rigging provider

Does the fitting have required tensile strength, ductility, fatigue, and impact properties?

Are all material properties met?

Why choose Crosby

Crosby designs its fittings to include required working load limits and design factors. Equally important are the ductility, fatigue, and impact properties. We provide you with material properties that minimize the risk of failure. No shortcuts in processing are made to save cost while sacrificing any of these performance elements.

Material properties by product group (value added qualities)

Tensile Strength – Hooks, Shackles, Turnbuckles, Chain Fittings **(***Crosby can provide typical hardness, tensile, and typical yield strength values.)*

Ductility – Hooks, Shackles, Turnbuckles, Chain Fittings **(***Crosby can provide typical reduction of area and elongation values upon special request.)*

Impact Properties – Hooks, Shackles, Turnbuckles, Chain Fittings (*Crosby's quenched and tempered products have enhanced impact properties for greater toughness at all temperatures. Charpy impact properties are available if requested at time of order.)*

Fatigue Properties – Hoist Hooks, Shackles, Eye Bolts, Turnbuckles, Swivel Hoist Rings, Chain Fittings, Snatch Blocks are fatigue rated to 20,000 cycles at 1-1/2 times the WLL. (*Crosby products are designed to meet specific fatigue performance levels. If requested at time of order, these fatigue properties can be provided.)*

Proof Testing – All products *(Proof testing and certification are furnished standard with some products. If requested at time of order, proof testing certification is available for most of Crosby's remaining product line, with the exception of swage sockets and sleeves, spelter sockets, thimbles, etc.)*

QC 1400 Audits – Hoist Hooks only [*Crosby's QC 1400 program provides reduction of are and elongation values, as well as hardness, tensile, and yield strength values for each production lot of hoist hooks. These factors are traceable by the Product Identification Code (PIC).]*

MAG Certification, Ultrasonic, X-Ray & Dye Penetrant Testing – All products *(If requested at time of order, different non-destructive testing and certification is available.)*

Chemistry Analysis – All products (*Each heat of steel is individually verified to confirm chemical analysis prior to manufacturing.)*

Copyright © 2023 The Crosby Group LLC All Rights Reserved

HEAT TREATMENT

The heat treatment of steel is an ancient art and science that dates back to the Iron Age. Today, it has been refined to a sophisticated science. It is now possible to greatly enhance the strength, ductility, and resilience of steel through a properly controlled heat treatment process. The 'as forged' fitting results in variability that is detrimental in applications that require toughness. Normalizing, spheroidized annealing, and quench and tempering are heat treat processes. Proper heat treatment eliminates the risk of cooling variation at the forging process. This is true of all steels regardless of material grades.

Crosby heat treats all fittings that are load bearing components and minimizes risk by the effective heat treatment of fittings. We do not take shortcuts for the sake of cutting cost. A non-heat treated product compromises the performance ability of that product.

Microstructures for various heat treatment processes

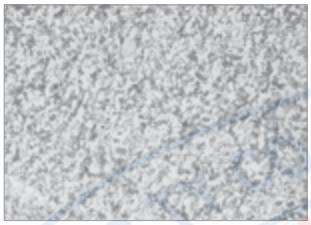

AS FORGED

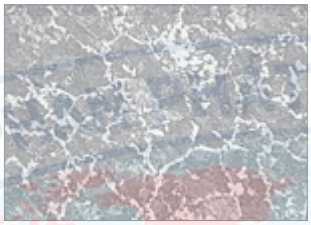

NORMALIZED

QUENCHED & TEMPERED

COLD TUFF®

QUENCHED & TEMPERED

Quenching and tempering of steel has been found to be the heat treatment best suited to fully develop the strength and enhance the grain flow of carbon and alloy forgings.

The quenched and tempered product will deform before ultimate failure, thus giving warning.

The quenching process is rapid cooling in water or oil, after heating, to form a strong but brittle structure. The tempering process is the reheating of the steel to obtain the desired strength while increasing the ductility and toughness.

Quench and tempering provides the consistency of performance needed by all critical applications, especially overhead lifting.

Questions to ask your rigging provider

Are load-bearing fittings heat treated, and what type of heat treatment is used?

What products do they quench and temper, and are their products exposed to high-stress quenched and temper?

If not, why are they willing to accept inferior impact toughness properties of non-quenched and tempered products?

Some supply critical fittings in 'as forged' or 'as cast' condition, and many normalize their forgings but do not quench and temper.

Why choose Crosby

Crosby fittings are exposed to high stress applications, designed as load-bearing elements, and are quenched and tempered.

The Crosby Quenched & Tempered process is the most consistent method of assuring that every fitting performs as needed, especially in overhead lifting.

Q&T
QUENCHED & TEMPERED

MATERIAL CONTROL

The proper heat treatment of forged fittings depends on the appropriate selection of materials and use of heat treat procedures. Fine grained, special bar forging quality steel of specific cleanliness requirements and guaranteed hardenability in the appropriate grades must be used.

Proper selection of steel is not enough, however. The control and management of these steels, from purchase through the entire manufacturing process, is essential to assure that the proper results are attained in the designated product. This control should utilize a production traceability program.

Questions to ask your rigging provider

Do they have an identification code forged into the product that traces material back to verified certification?

Are all heat records maintained by the traceability code?

Most do not provide traceability of material.

Why choose Crosby

Crosby uses the Product Identification Code (PIC) for material control, from receipt and verification of steel throughout the entire manufacturing process.

Crosby can provide certified material analysis for each production lot.

ULTIMATE STRENGTH, DUCTILITY, IMPACT & FATIGUE PROPERTIES

The mechanical properties of steel when a load is very rapidly applied is known as its *impact strength*. Forged fittings must be able to have impact strengths that match the requirements of their application, especially in cold temperatures. The ability of a steel to withstand repeated applications of a load is measured by fatigue testing. The proper heat treatment of forgings, which includes quenching and tempering, can develop these properties to their desired level in a consistent and reliable manner. The ability to perform when overloaded is known as *ductility*.

Question to ask your rigging provider

Are the products designed and manufactured with considerations for strength, fatigue, impact, and ductility?

Some do not utilize materials that have good impact and fatigue properties.

Why choose Crosby

Crosby's product line benefits from the selection of steel and the heat treatment process that allows for superior strength, ductility, impact, and fatigue performance. The product deforms if overloaded, giving warning before ultimate failure. All of these properties are essential if the product is to perform time after time. They are also important to assure that the inspection criteria set forth by ANSI will effectively monitor the ability of the fitting to continue in service.

Heat treatment process by product group

Shackles – Pins and bows are Quenched and Tempered
Eye Hooks – Quenched and Tempered
Shank Hooks – Quenched and Tempered
Master Links – Quenched and Tempered
Hoist Rings – Quenched and Tempered
Swivels – Quenched and Tempered
Turnbuckles – All ends are Q&T or Normalized bodies Normalized

Pad Eyes – Quenched and Tempered
Eye Bolts – Quenched and Tempered
Load Binders – Quenched and Tempered
Swage Sockets – Spheroidized Annealed
Swage Sockets – Cold Tuff®
Spelter Sockets – Normalized

QUALITY SYSTEM CERTIFICATION
DNV·GL
ISO 9001:2015

Copyright © 2023 The Crosby Group LLC All Rights Reserved

YouTube

Subscribe & watch

Training and insights, new product announcements, application demonstrations, behind-the-scenes factory tours and much more.

what is hook ductility?

youtube.com/thecrosbygroup

CÔNG TY CỔ PHẦN PHÁT TRIỂN KINH TẾ ASEAN
ASEAN DEVELOPMENT JOINT STOCK COMPANY
ISO 9001:2015
Since 2006

VALUE LONG AFTER THE SALE

Crosby Group products are well known for quality, design, and safety features. It's important to know how to identify, interpret, and utilize the forged-in markings on your hardware to help ensure proper rigging for the life of the shackle, hook, or clip.

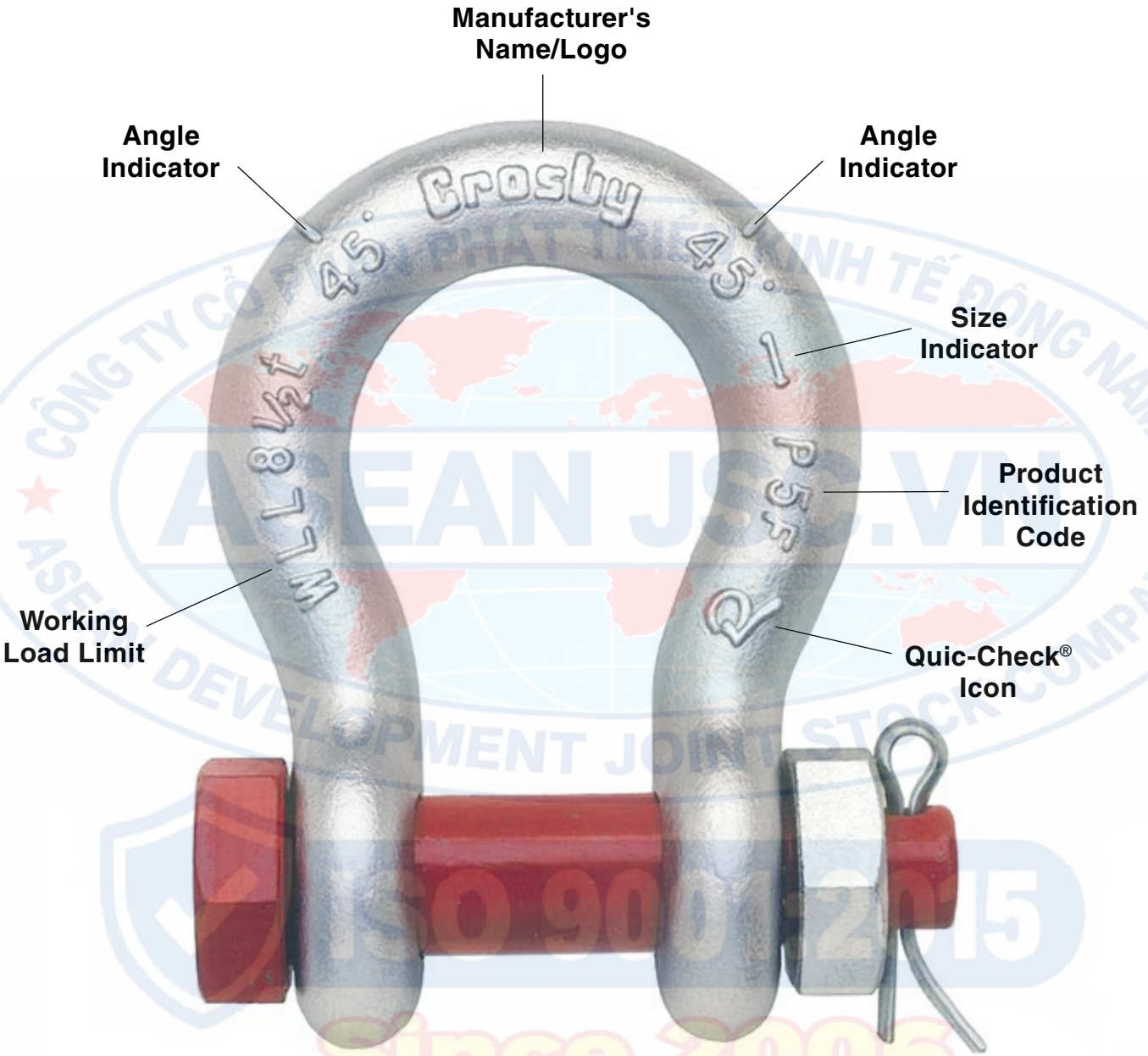

Watch our latest video training series on product identification

Shackle identification

Hook identification

Clip identification

thecrosbygroup.com/identification

Copyright © 2023 The Crosby Group LLC All Rights Reserved

IDENTIFICATION

PRODUCT IDENTIFICATION

The most effective way of knowing the product you are purchasing is as reliable as possible is to only buy from a reputable company that maintains consistent and adequate quality. The company should clearly mark its components and finished products with the company name or logo, the component size or working load limit, and a traceability code that is actively used by the manufacturer to control material and processes.

Questions to ask your rigging provider

Do they have a traceability system?

If yes, is their traceability system also utilized for cast fittings, swage fittings, and all load-bearing components?

Why choose Crosby

Crosby forges the Product Identification Code (PIC), each item's size or Working Load Limit (or a cross-reference code to working load limit) and 'Crosby' into each product.

MATERIAL TRACEABILITY

A forged-in identification code should be used to record the material grade and origin. This record should trace the material to the heat lot of material of steel as rolled at the supplying mill. Verification checks of all materials purchased for forging must be done to ensure the steel supplied meets the specifications required. This verification should be traceable by a forged-in product identification code. The source and verification of material actually used in each forging must be able to be determined through appropriate documentation.

Questions to ask your rigging provider

Do they have a permanently marked code in each product that traces material back to a verified certification?

Do they test each heat of steel with their own testing facilities?

Why choose Crosby

Crosby uses the Product Identification Code (PIC) to maintain material control from the steel mill, to receipt at our plant, to verification, and throughout the manufacturing process. We can provide certified material analysis for each production lot, traceable by the PIC. Through our own laboratory, we verify the analysis of each heat of steel and only purchase special bar forging quality steel with specific cleanliness requirements and guaranteed hardenability.

MANUFACTURING CONTROL

The permanent identification code should be used to maintain a record of which manufacturing facility produced the product and production dates. All quality records and product performance testing for audit and engineering purposes should also reference the code so that a history can be maintained.

Question to ask your rigging provider

Do their products have a permanent code that is used to maintain control throughout the manufacturing process?

PERFORMANCE & APPLICATION DATA

Detailed performance, application, and warning information will assist you in the proper use of products. This information is most effective when provided in supporting brochures and engineering documents. An identification marking must be used to reference this information by use of a cross reference between the product code and the literature. Proper performance data should include each item's working load limit, proof load and design factor. It should also include the item's manufacturing processes, such as heat treatment and galvanizing, and list any specification the product meets or exceeds.

Questions to ask your rigging provider

What warning and application information do they provide?

Are there markings in products to aid in the proper use of the fitting?

Do they provide training support?

Why choose Crosby

Crosby provides a comprehensive catalog that describes each product's performance, along with detailed application and warning information on selected products. Selected products incorporate markings forged into the product to aid in the proper use of the fitting.

In addition, we provide product and application training in both in-person and digital formats.

Identification & labeling on product by product group	Name/Logo	Size	WLL	Rated in Metric Tons (t)	Product Identification Code	Serial Number	QUIC-CHECK® Markings
Shackles							
Shank Hooks		*See note below					
Eye Hooks							
Other Forged Hooks							S-322
Snatch Blocks					Forged components		
Clips					Forged components		
Fist Grip Clips							
Turnbuckles							
Load Binders							
Eye Bolts							
Master Links							
Tapered Swivel Bearings							
Chain Components							
Swage Sockets							
Sleeves & Buttons							
380 Blocks							
680 Blocks							
Oil Field Blocks							
750 Bridge Crane Blocks							
Shackles CT & 2160							CT only
Swivel Hoist Rings				Select sizes			
Eliminator® Chain							
Lifting Clamps							
Angular Contact Swivel Bearings							

*Both size and WLL are identified with a frame size that can be referenced back to our literature.

Copyright © 2023 The Crosby Group LLC All Rights Reserved

30+ years of making industries safer through world-class training

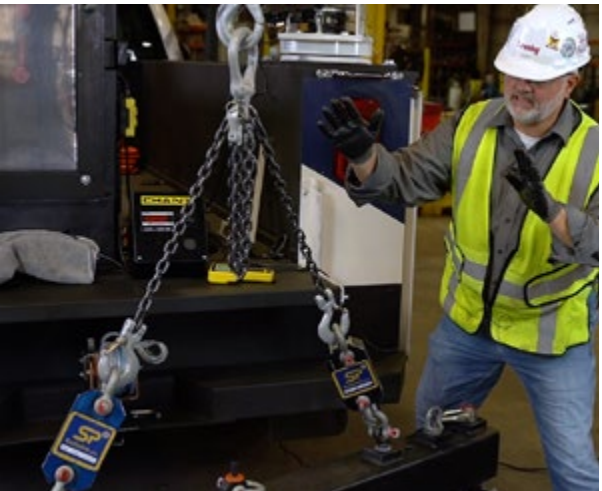

TRAINING

The Crosby Group launched its official training program in 1991 with the mission of delivering unparalleled support through product and application education and demonstrations. Since then, we are proud to have trained more than **500,000 people** through in-person courses and seminars, live safe rigging clinics, online courses, webinars, and other digital content. Register for a training session today, or contact your area sales manager if you are interested in organizing an in-person or digital Crosby Group training event with your company.

Training opportunities available from The Crosby Group

ONLINE COURSES

User's Guide for Lifting – Learn the fundamentals of rigging through this self-paced course that covers topics featured in the popular Crosby User's Guide for Lifting rigging card. This course is designed for anyone who uses Crosby products. Certificate available upon successful completion.

Crosby Knowledge Center – This course is designed to assist authorized Crosby Group distributors and their sales and marketing teams. The self-paced course covers, in detail, the value added features of the Crosby product line and other topics covered in this catalog.

WEBINARS & OTHER DIGITAL CONTENT

Webinars – We host numerous free topical training webinars throughout the year (public and private). Follow The Crosby Group on social media to be the first to know when a new public event is announced.

Podcast – Watch our popular *Ask the Expert* video podcast series on our YouTube channel, in which Crosby experts answer safe rigging, lifting, and securement questions from viewers.

Video Training – We offer on-demand toolbox-style training videos, available for select companies upon request.

IN-PERSON COURSES

ASME/OSHA* – For individuals who work in manufacturing facilities, construction sites, utilities, etc., and anyone who must comply with the OSHA regulations. These courses also draw heavily from the ASME standards. Similar courses are offered in Europe, Latin America, Asia, and Middle East, except the OSHA emphasis is reduced and other applicable standards that apply such as EN standards may be inserted. The Rigging Trainer Development course is available in select cities.

Land Based Energy (Oil & Gas)* – For individuals who work in land based oil and gas industry. These courses provide an extra emphasis on ASME (American Society of Mechanical Engineers) and API (American Petroleum Institute) information coupled with well servicing, gin pole truck, and energy industry specifics. The Rigging Trainer Development course is available in select cities.

Offshore Energy (Oil & Gas)* – For individuals who work in offshore energy environments. These courses draw heavily from the API RP 2D recommended practices, coupled with ASME and Crosby recommendations. Rigging Trainer Development course is available in select cities.

Fundamentals of Rigging for Wind Turbine Installation & Maintenance* – Offers in-depth discussions that address the standards and regulations pertaining to rigging equipment, such as OSHA, ASME and API, as well as Crosby recommendations that can assist onshore and offshore wind energy personnel in their endeavors for safe material handling activities. Interactive workshops and classroom exercises are designed to enhance the learning experience and cover information that is not always found in most rigging courses or readily available in industry literature.

**certificate available upon successful completion*

ON-SITE SAFE RIGGING CLINICS

Rig Safe, Rig Smart Truck (North America)

Rig Safe, Rig Smart Trailer (Europe)

The Crosby Group hosts on-site safe rigging clinics across North America and the United Kingdom. The custom-designed Rig Safe, Rig Smart Truck (North America) and Trailer (Europe) delivers valuable, practical hands-on rigging training at your job site. Clinics provide insights into key safe, effective, and efficient rigging best practices through a 30-45 minute toolbox talk, along with live demonstrations of a product proof test and live load application.

To learn more about any of these opportunities,
visit **thecrosbygroup.com/training**.

Copyright © 2023 The Crosby Group LLC All Rights Reserved

Crosby Group hardware used on the SpaceX Starship lift

The latest news, events, insights (and some pretty interesting project photos).
Follow and connect with us at **linkedin.com/company/thecrosbygroup**.

LinkedIn

SHACKLES

Forged, heat treated, and tested for unmatched strength and performance.

CÔNG TY CỔ PHẦN PHÁT TRIỂN KINH TẾ ĐÔNG NAM Á
ASEAN JSC.VN
ASEAN DEVELOPMENT JOINT STOCK COMPANY
ISO 9001:2015
Since 2006

thecrosbygroup

thecrosbygroup.com

SHACKLES

DESIGN

The theoretical reserve capability of carbon shackles should be at a minimum 5 to 1, and alloy shackles a minimum of 4 to 1. Known as the Design Factor, it is usually computed by dividing the catalog Ultimate Load by the Working Load Limit.

The Ultimate Load is the average load or force at which the product fails or no longer supports the load.

The Working Load Limit is the maximum mass or force which the product is authorized to support in general service. The Design Factor is generally expressed as a ratio such as 5 to 1, or 5:1.

Also important to the design of shackles is the selection of proper steel to support fatigue, ductility, and impact properties.

Questions to ask your rigging provider

What is the Working Load Limit and Design Factor for shackles?

Is deformation upon overloading a critical consideration in their design?

Do they jeopardize other properties by having high hardness in order to increase Working Load Limit or Design Factor?

Why choose Crosby

Crosby carbon shackles have the highest design factor (6 to 1) in the industry. All of Crosby's Design Factors are documented.

Crosby purchases only special bar forging quality steel with cleanliness and guaranteed harden ability. All material chemistry is independently verified prior to manufacturing.

The design of Crosby shackles assures that strength, ductility, and fatigue properties are met.

CLOSED DIE FORGING

The proper performance of premium shackles depends on good manufacturing techniques that include proper forging and accurate machining. Closed-die forging of shackles assures clear lettering, superior grain flow, and consistent dimensional accuracy.

A closed-die forged bow allows for an increased cross section that, when coupled with quench and tempering, enhances strength and ductility.

Closed-die bow forgings combined with close tolerance pin holes assures good fatigue life. Close pin-to-hole tolerance has been proven to be critical for good fatigue life, particularly with screw pin shackles.

Questions to ask your rigging provider

Are their shackles closed-die forged with close tolerance pin holes?

Do their shackles have good fatigue life?

Do their shackles have a fatigue life that meets the new world standards?

Many forge bows utilize an open die forging process which allows for inconsistent dimensional accuracy and increased pin hole clearance, thus jeopardizing the fatigue life of the shackle in actual use.

Why choose Crosby

Each shackle is closed-die forged. Closed-die forging produces consistent dimensions. A closed-die forged bow allows for an increased cross section that, when coupled with quench and tempering, enhances strength and ductility.

Close tolerance holes and concentric pins with good surface finishes are provided by Crosby and are proven to provide improved fatigue life in actual use.

Crosby shackles are fatigue rated as well as load rated. Close pin to hole tolerance has been proven to be critical for good fatigue life, particularly with screw pin shackles.

FATIGUE PROPERTIES

The mechanical properties of steel when a load is repeatedly applied is known as its fatigue strength. Fatigue testing determines the ability of a material to withstand repeated applications of a load. The load by itself may be too small to produce a failure. There are three factors involved when considering fatigue strength: the number of cycles at which a crack initiates, the number of cycles at which the crack starts to grow, and the number of cycles at which the fitting fails. One accepted method of fatigue rating fittings is to test them to 1-1/2 times the working load limit for 20,000 cycles, without failure. This standard test is accepted as indicating indefinite life when used within the working load limit under normal circumstances.

Questions to ask your rigging provider

Does the material selection process recognize fatigue properties?

Do they have an active program to design and test fatigue properties?

Is there a program in place to fatigue rate all load-bearing products that are used in critical applications?

Why choose Crosby

Crosby has an active program to determine fatigue properties. Included in this program is the use of finite element design methods to predict possible weak areas, which in turn allows us to design in superior fatigue properties.

Crosby specifies material of specific cleanliness and guaranteed hardenability which enhances fatigue. We design and manufacture products with fatigue in mind and ensure all load-bearing products used in critical applications being fatigue rated.

QUENCHED & TEMPERED

Quench and tempering assures the uniformity of performance and maximizes the properties of the steel. This means that each shackle meets its rated strength and has required ductility, toughness, impact, and fatigue properties.

The requirements of your job demand this reliability and consistency. This process develops a tough material that reduces the risk of brittle, catastrophic failure.

The shackle bow will deform if overloading occurs, giving warning before ultimate failure.

Questions to ask your rigging provider

Are their bows and pins quenched and tempered?

If not, are they willing to accept inferior impact toughness, product deformation, and the increased risk of inconsistency?

Why do many manufacturers not recommend non-heat-treated shackles for overhead lifting?

Why do some recommend quench and tempering for alloy but not carbon grades?

Many normalize the shackle bows. As a result, desired properties are not achieved. A few even provide bows in an 'as-forged' condition, resulting in the possibility of brittle failure.

Why choose Crosby

All Crosby shackle bows and pins are quenched and tempered, which enhances their performance under cold temperatures and adverse field conditions. Crosby's carbon shackles are recommended for all critical applications including overhead lifting. Alloy shackles are recommended when specific dimensional requirements dictate a size that requires higher working load limits. Crosby shackles provide the tensile strength, ductility, impact, and fatigue properties that are essential if they are to perform time after time in adverse conditions.

These properties assure that the inspection criteria set forth by ANSI will effectively monitor the ability of the shackles to continue in service.

Watch our video on the Quench & Tempered process at **thecrosbygroup.com/QT**.

IDENTIFICATION & APPLICATION INFO

The proper application of shackles requires that the correct type and size of shackle be used. The shackle's Working Load Limit, its size, a traceability code, and the manufacturer's name should be clearly marked in the bow.

Traceability of the material chemistry and properties is essential for total confidence in the product. Material chemistry should be independently verified prior to manufacturing.

Questions to ask your rigging provider

Do they have an active traceability system used in manufacturing?

Is the material chemistry independently verified?

What training support is provided?

Why choose Crosby

We forge the Crosby name or "CG," the Working Load Limit, and the Product Identification Code (PIC) into each bow, and the Crosby name or "CG," and the PIC into each pin of its full line of screw pin, round pin, and bolt type anchor and chain shackles. Crosby also provides training on the proper use of shackles.

Watch our training video on shackle identification at **thecrosbygroup.com/identification**.

Copyright © 2023 The Crosby Group LLC All Rights Reserved

CROSBY VALUE ADDED

- **Charpy impact properties:** Crosby shackles are quenched and tempered and have enhanced impact properties for greater toughness at all temperatures. If requested at the time of order, Crosby can provide Charpy impact properties.
- **Fatigue properties:** Fatigue properties are available for 1/3 to 55 metric ton shackles. These Crosby shackles are fatigue rated to 20,000 cycles at 1-1/2 times the Working Load Limit.
- **Ductility properties:** Typical ductility properties are available for all sizes upon special request.
- **Hardness levels and material tensile strengths:** Typical values are available for all sizes of shackles, and actual values can be furnished if requested at the time of order.
- **Proof Testing:** If requested at the time of order, shackles can be proof tested with certificates.
- **Mag Certification:** If requested at the time of order, shackles can be magnetic particle inspected with certificates.
- **Certification:** Certification to world class standards is available upon special request at the time of order; American Bureau of Shipping, Lloyds Register of Shipping, Det Norske Veritas, American Petroleum Institute, RINA, Nuclear Regulatory Commission, and several other worldwide standards.
- **Applications:** ***Round pin shackles*** can be used in tie down, towing, suspension or lifting applications where the load is strictly applied in-line. ***Screw pin shackles*** can be used in any application where a round pin shackle is used. In addition, screw pin shackles can be used for applications involving side-loading circumstances. Reduced working load limits are required for side-loading applications. ***Bolt type shackles*** can be used in any application where round pin or screw pin shackles are used. In addition, they are recommended for permanent or long-term installations and where the load may slide on the shackle pin causing the pin to rotate.
- **Material analysis:** Crosby can provide certified material (mill) analysis for each production lot, traceable by the Product Identification Code (PIC). Crosby, through its own laboratory, verifies the analysis of each heat of steel. Crosby purchases only ***special bar*** forging quality steel with specific cleanliness requirements and guaranteed hardenability.
- **Field inspection:** Written instructions for visual, magnaflux, and dye penetrant inspection of shackles are available from Crosby. In addition, acceptance criteria and repair procedures for shackles are available.
- **QUIC-CHECK®**: Shackles incorporate two marking indicators forged into the shackle bow at 45° angles from vertical. These are utilized to quickly check the approximate angle of a two-legged hitch or check the angle of a single leg hitch. If the load is off vertical or side loaded a reduction in the Working Load Limit of the shackle is required.

G-213

Round pin anchor shackles meet the performance requirements of Federal Specification RR-C-271G, Type IVA, Grade A, Class 1, except for those provisions required of the contractor.

G-209

Screw pin anchor shackles meet the performance requirements of Federal Specification RR-C-271G, Type IVA, Grade A, Class 2, except for those provisions required of the contractor.

G-2130

Bolt type anchor shackles meet the performance requirements of Federal Specification RR-C-271G, Type IVA, Grade A, Class 3, except for those provisions required of the contractor.

G-210

Screw pin chain shackles meet the performance requirements of Federal Specification RR-C-271G, Type IVB, Grade A, Class 2, except for those provisions required of the contractor.

G-215

Round pin chain shackles meet the performance requirements of Federal Specification RR-C-271G, Type IVB, Grade A, Class 1, except for those provisions required of the contractor.

G-2150

Bolt type chain shackles meet the performance requirements of Federal Specification RR-C-271G, Type IVB, Grade A, Class 3, except for those provisions required of the contractor.

Copyright © 2022 The Crosby Group LLC All Rights Reserved

Crosby

G-213/S-213

- Forged, Quenched & Tempered, with alloy pins.
- Working Load Limit permanently shown on every shackle.
- Hot-dip galvanized (G) or self colored (S).
- Sizes 3/8 inch and below are mechanically galvanized.
- Fatigue rated to 20,000 cycles at 1-1/2 times the Working Load Limit.
- Shackles can be furnished proof tested with certificates to designated standards, such as ABS, DNV, Lloyds, or other certification. Charges for proof testing and certification available when requested at the time of order.
- Shackles are Quenched & Tempered and can meet DNV impact requirements of 42 Joules (31 ft-lb) at -20° C (-4° F).
- G-213 Round pin anchor shackles meet the performance requirements of Federal Specification RR-C-271H, Type IVA, Grade A, Class 1, except for those provisions required of the contractor.
- DO NOT SIDE LOAD ROUND PIN SHACKLES.
- Look for the Red Pin®... the mark of genuine Crosby quality.

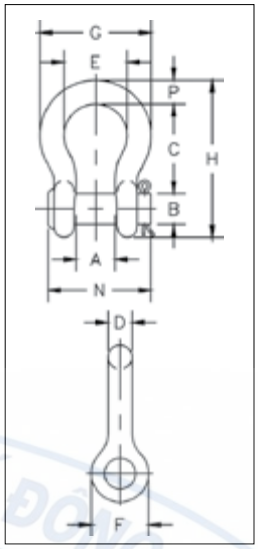

G-213 / S-213 Round Pin Anchor Shackles

Nominal Size (in)	Working Load Limit (t)	Stock No. G-213	Stock No. S-213	Weight Each (kg)	Dimensions (mm) A	B	C	D	E	F	G	H	N	P	Tolerance (+ / - mm) C	A
1/4	0.5	1018017	1018026	.06	11.9	7.85	28.7	6.35	19.8	15.5	32.5	46.7	34.0	6.35	1.50	1.50
5/16	0.75	1018035	1018044	.08	13.5	9.65	31.0	7.85	21.3	19.1	37.3	53.0	40.4	7.85	1.50	1.50
3/8	1	1018053	1018062	.13	16.8	11.2	36.6	9.65	26.2	23.1	45.2	63.0	47.2	9.65	3.30	1.50
7/16	1.5	1018071	1018080	.17	19.1	12.7	42.9	11.2	29.5	26.9	51.5	74.0	54.0	11.2	3.30	1.50
1/2	2	1018099	1018106	.32	20.6	16.0	47.8	12.7	33.3	30.2	58.5	83.5	60.5	12.7	3.30	1.50
5/8	3.25	1018115	1018124	.68	26.9	19.1	60.5	16.0	42.9	38.1	74.5	106	74.0	17.5	3.30	1.50
3/4	4.75	1018133	1018142	1.05	31.8	22.4	71.5	19.1	51.0	46.0	89.0	126	87.0	20.6	6.35	1.50
7/8	6.5	1018151	1018160	1.58	36.6	25.4	84.0	22.4	58.0	53.0	102	148	96.5	24.6	6.35	1.50
1	8.5	1018179	1018188	2.27	42.9	28.7	95.5	25.4	68.5	60.5	119	167	115	26.9	6.35	1.50
1-1/8	9.5	1018197	1018204	3.16	46.0	31.8	108	28.7	74.0	68.5	131	190	130	31.8	6.35	1.50
1-1/4	12	1018213	1018222	4.42	51.5	35.1	119	32.8	82.5	76.0	146	210	140	35.1	6.35	1.50
1-3/8	13.5	1018231	1018240	6.01	57.0	38.1	133	36.1	92.0	84.0	162	233	156	38.1	6.35	3.30
1-1/2	17	1018259	1018268	7.82	60.5	41.4	146	39.1	98.5	92.0	175	254	165	41.1	6.35	3.30
1-3/4	25	1018277	1018286	13.4	73.0	51.0	178	46.7	127	106	225	313	197	57.0	6.35	3.30
2	35	1018295	1018302	20.8	82.5	57.0	197	53.0	146	122	253	348	222	61.0	6.35	3.30

6:1 Design Factor. Maximum Proof Load is 2 times the Working Load Limit.

Load Rated · Fatigue Rated · QUIC-CHECK® · Q&T QUENCHED & TEMPERED · MAXTOUGH® · CE

APPLICATION AND WARNING INFORMATION SECTION 17

Copyright © 2023 The Crosby Group LLC All Rights Reserved

G-215/S-215

- Forged, Quenched & Tempered, with alloy pins.
- Working Load Limit permanently shown on every shackle.
- Hot-dip galvanized (G) or self colored (S).
- Sizes 3/8 inch and below are mechanically galvanized.
- Fatigue rated to 20,000 cycles at 1-1/2 times the Working Load Limit.
- Shackles can be furnished proof tested with certificates to designated standards, such as ABS, DNV, Lloyds, or other certification. Charges for proof testing and certification available when requested at the time of order.
- Shackles are Quenched and Tempered and can meet DNV impact requirements of 42 Joules (31 ft-lb) at -20° C (-4° F).
- G-215 Round pin chain shackles meet the performance requirements of Federal Specification RR-C-271H, Type IVB, Grade A, Class 1, except for those provisions required of the contractor.
- DO NOT SIDE LOAD ROUND PIN SHACKLES.
- DO NOT SIDE LOAD ROUND PIN SHACKLES.

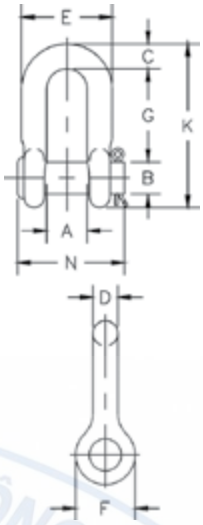

G-215 / S-215 Round Pin Chain Shackles

Nominal Size (in)	Working Load Limit (t)	Stock No.		Weight Each (kg)	Dimensions (mm)									Tolerance (+ / - mm)	
		G-215	S-215		A	B	C	D	E	F	G	K	N	G	A
1/4	0.5	1018810	1018829	.05	11.9	7.85	6.35	6.35	24.6	15.5	22.4	40.4	34.0	1.50	1.50
5/16	0.75	1018838	1018847	.08	13.5	9.65	7.85	7.85	29.5	19.1	26.2	48.5	40.4	1.50	1.50
3/8	1	1018856	1018865	.11	16.8	11.2	9.65	9.65	35.8	23.1	31.8	58.5	47.2	3.30	1.50
7/16	1.5	1018874	1018883	.18	19.1	12.7	11.2	11.2	41.4	26.9	36.6	67.5	54.0	3.30	1.50
1/2	2	1018892	1018909	.23	20.6	16.0	12.7	12.7	46.0	30.2	41.4	77.0	60.5	3.30	1.50
5/8	3.25	1018918	1018927	.55	26.9	19.1	15.7	16.0	58.5	38.1	51.0	95.5	74.0	3.30	1.50
3/4	4.75	1018936	1018945	.91	31.8	22.4	20.6	19.1	70.0	46.0	60.5	115	87.0	6.35	1.50
7/8	6.5	1018954	1018963	1.49	36.6	25.4	24.6	22.4	81.0	53.0	71.5	135	96.5	6.35	1.50
1	8.5	1018972	1018981	2.15	42.9	28.7	25.4	25.4	93.5	60.5	81.0	151	115	6.35	1.50
1-1/8	9.5	1018990	1019007	2.86	46.0	31.8	31.8	28.7	103	68.5	91.0	172	130	6.35	1.50
1-1/4	12	1019016	1019025	4.08	51.5	35.1	35.1	31.8	115	76.0	100	191	140	6.35	3.30
1-3/8	13.5	1019034	1019043	5.44	57.0	38.1	38.1	35.1	127	84.0	111	210	156	6.35	3.30
1-1/2	17	1019052	1019061	7.33	60.5	41.4	41.1	38.1	137	92.0	122	230	165	6.35	3.30
1-3/4	25	1019070	1019089	13.6	73.0	51.0	54.0	44.5	162	106	146	279	197	6.35	3.30
2	35	1019098	1019105	19.6	82.5	57.0	51.0	53.3	184	122	172	312	222	6.35	3.30

6:1 Design Factor. Maximum Proof Load is 2 times the Working Load Limit.

Load Rated Fatigue Rated QUIC-CHECK® Q&T MAXTOUGH® CE

APPLICATION AND WARNING INFORMATION SECTION 17

Copyright © 2022 The Crosby Group LLC All Rights Reserved

Crosby

G-209/S-209

- Meets performance requirements of Grade 6 shackles.
- Forged, Quenched & Tempered, with alloy pins.
- Working Load Limit and Grade 6 permanently shown on every shackle.
- Hot-dip galvanized (G) or self colored (S).
- Sizes 3/8 inch and below are mechanically galvanized.
- Fatigue rated at 1-1/2 times the Working Load Limit at 20,000 cycles.
- Shackles can be furnished proof tested with certificates to designated standards, such as ABS, DNV, Lloyds, or other certifications. Proof testing and certification available when requested at the time of order, charges will apply.
- Approved for use at -40° C (-40° F) to 204° C (400° F).
- All 209 and 210 shackles can meet charpy requirements of 42 Joules (31 ft-lb) avg. at -20° C (-4° F) upon special request.
- Meets or exceeds all requirements of ASME B30.26.
- Type Approval certification in accordance with ABS 2016 Steel Vessel Rules and ABS Guide for Certification of Lifting Appliances available. Certificates available when requested at time of order and may include additional charges.
- G-209 Screw pin anchor shackles meet the performance requirements of Federal Specification RR-C-271H, Type IVA, Grade A, Class 2, except for those provisions required of the contractor.
- Look for the Red Pin®... the mark of genuine Crosby quality.

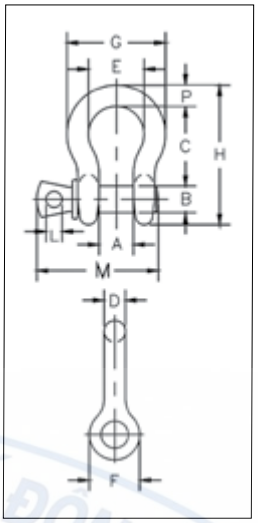

G-209 / S-209 Screw Pin Anchor Shackles

Nominal Size (in)	Working Load Limit (t)	Stock No. G-209	Stock No. S-209	Weight Each (kg)	Dimensions (mm) A	B	C	D	E	F	G	H	L	M	P	Tolerance (+ / - mm) C	A
3/16	0.33	1018357	–	.03	9.7	6.4	22.4	4.8	15.2	14.2	24.9	37.3	4.1	29.0	4.8	1.50	1.50
1/4	0.5	1018375	1018384	.05	11.9	7.9	28.7	6.4	19.8	15.7	32.5	46.7	4.8	36.3	6.4	1.50	1.50
5/16	0.75	1018393	1018400	.09	13.5	9.7	30.7	7.9	21.3	19.1	37.1	53.1	5.6	43.4	7.9	3.30	1.50
3/8	1	1018419	1018428	.14	16.8	11.2	36.8	9.7	26.2	23.4	45.5	63.5	6.4	52.3	9.7	3.30	1.50
7/16	1.5	1018437	1018446	.17	19.1	12.7	42.9	11.2	29.5	26.9	51.8	73.9	7.9	60.2	11.2	3.30	1.50
1/2	2	1018455	1018464	.33	20.6	15.7	47.8	12.7	33.3	30.0	58.7	83.3	9.7	68.3	12.7	3.30	1.50
5/8	3.25	1018473	1018482	.62	26.9	19.1	60.5	15.7	42.9	38.1	74.4	106	11.2	84.8	17.5	6.35	1.50
3/4	4.75	1018491	1018507	1.07	31.8	22.4	71.4	19.1	50.8	46.0	88.9	126	12.7	101	20.6	6.35	1.50
7/8	6.5	1018516	1018525	1.64	36.6	25.4	84.1	22.4	57.9	53.3	103	148	12.7	114	24.6	6.35	1.50
1	8.5	1018534	1018543	2.28	42.9	28.4	95.5	25.4	68.3	60.5	119	167	14.2	130	26.9	6.35	1.50
1-1/8	9.5	1018552	1018561	3.36	46.0	31.8	108	29.5	73.9	68.1	131	190	16.0	152	31.8	6.35	1.50
1-1/4	12	1018570	1018589	4.31	51.6	35.1	119	32.8	82.8	76.2	146	210	17.5	165	35.1	6.35	1.50
1-3/8	13.5	1018598	1018605	6.14	57.2	38.9	133	36.1	91.9	84.1	162	233	19.1	176	38.1	6.35	3.30
1-1/2	17	1018614	1018623	7.80	60.5	41.4	146	38.9	98.6	91.9	176	254	20.6	189	41.1	6.35	3.30
1-3/4	25	1018632	1018641	12.6	73.2	50.8	178	46.7	127	106	224	313	25.4	233	57.2	6.35	3.30
2	35	1018650	1018669	20.4	82.6	57.2	197	52.8	146	122	258	347	28.7	263	61.0	6.35	3.30
2-1/2	55	1018678	1018687	38.9	105	69.9	267	69.1	184	148	324	455	35.1	335	79.5	6.35	6.35

6:1 Design Factor. Maximum Proof Load is 2 times the Working Load Limit. For Working Load Limit reduction due to side loading applications, see Warnings & Applications.

Load Rated · Fatigue Rated · TA TYPE APPROVED · QUIC-CHECK® · Q&T QUENCHED & TEMPERED · MAXTOUGH® · CE

APPLICATION AND WARNING INFORMATION SECTION 17

Copyright © 2023 The Crosby Group LLC All Rights Reserved

G-210 / S-210

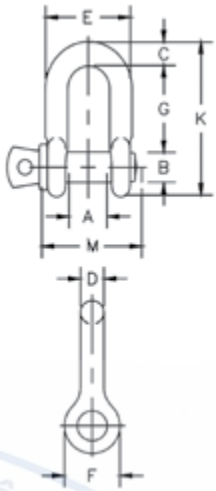

- Forged, Quenched & Tempered, with alloy pins.
- Working Load Limit and Grade 6 permanently shown on every shackle.
- Hot-dip galvanized (G) or self colored (S).
- Sizes 3/8 inch and below are mechanically galvanized.
- Fatigue rated at 1-1/2 times the Working Load Limit at 20,000 cycles.
- Shackles can be furnished proof tested with certificates to designated standards, such as ABS, DNV, Lloyds, or other certifications. Proof testing and certification available when requested at the time of order, charges will apply.
- Approved for use at -40° C (-40° F) to 204° C (400° F).
- All 209 and 210 shackles can meet charpy requirements of 42 Joules (31 ft-lb) avg. at -20° C (-4° F) upon special request.
- Meets or exceeds all requirements of ASME B30.26.
- Type Approval certification in accordance with ABS 2016 Steel Vessel Rules and ABS Guide for Certification of Lifting Appliances available. Certificates available when requested at time of order and may include additional charges.
- G-210 Screw pin anchor shackles meet the performance requirements of Federal Specification RR-C-271H, Type IVB, Grade A, Class 2, except for those provisions required of the contractor.
- Look for the Red Pin®... the mark of genuine Crosby quality.

G-210 / S-210 Screw Pin Chain Shackles

Nominal Size (in)	Working Load Limit (t)	Stock No.		Weight Each (kg)	Dimensions (mm)										Tolerance (+ / - mm)	
		G-210	S-210		A	B	C	D	E	F	G	K	L	M	G	A
1/4	0.5	1019150	1019169	.05	11.9	7.85	6.35	6.35	24.6	15.5	22.4	40.4	4.85	35.1	1.50	1.50
5/16	0.75	1019178	1019187	.08	13.5	9.65	7.85	7.85	29.5	19.1	26.2	48.5	5.60	42.2	1.50	1.50
3/8	1	1019196	1019203	.13	16.8	11.2	9.65	9.65	35.8	23.1	31.8	58.5	6.35	51.5	3.30	1.50
7/16	1.5	1019212	1019221	.20	19.1	12.7	11.2	11.2	41.4	26.9	36.6	67.5	7.85	60.5	3.30	1.50
1/2	2	1019230	1019249	.27	20.6	16.0	12.7	12.7	46.0	30.2	41.4	77.0	9.65	68.5	3.30	1.50
5/8	3.25	1019258	1019267	.57	26.9	19.1	15.7	16.0	58.5	38.1	51.0	95.5	11.2	85.0	3.30	1.50
3/4	4.75	1019276	1019285	1.20	31.8	22.4	20.6	19.1	70.0	46.0	60.5	115	12.7	101	6.35	1.50
7/8	6.5	1019294	1019301	1.43	36.6	25.4	24.6	22.4	81.0	53.0	71.5	135	12.7	114	6.35	1.50
1	8.5	1019310	1019329	2.15	42.9	28.7	25.4	25.4	93.5	60.5	81.0	151	14.2	129	6.35	1.50
1-1/8	9.5	1019338	1019347	3.06	46.0	31.8	31.8	28.7	103	68.5	91.0	172	16.0	142	6.35	1.50
1-1/4	12	1019356	1019365	4.11	51.5	35.1	35.1	31.8	115	76.0	100	191	17.5	156	6.35	3.30
1-3/8	13.5	1019374	1019383	5.28	57.0	38.1	38.1	35.1	127	84.0	111	210	19.1	174	6.35	3.30
1-1/2	17	1019392	1019409	7.23	60.5	41.4	41.1	38.1	137	92.0	122	230	20.6	187	6.35	3.30
1-3/4	25	1019418	1019427	12.1	73.0	51.0	54.0	44.5	162	106	146	279	25.4	231	6.35	3.30
2	35	1019436	1019445	19.2	82.5	57.0	60.0	51.0	184	122	172	312	31.0	263	6.35	3.30
2-1/2	55	1019454	1019463	32.5	105	70.0	66.5	66.5	238	145	203	377	35.1	330	6.35	6.35

6:1 Design Factor. Maximum Proof Load is 2 times the Working Load Limit. For Working Load Limit reduction due to side loading applications, see Warnings & Applications.

Load Rated Fatigue Rated TA TYPE APPROVED QUIC-CHECK® Q&T QUENCHED & TEMPERED MAXTOUGH® CE

APPLICATION AND WARNING INFORMATION SECTION 17

Copyright © 2023 The Crosby Group LLC All Rights Reserved

Crosby

G-2130 / S-2130

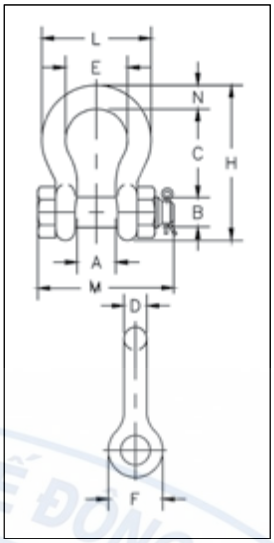

- Working Load Limit and Grade 6 permanently shown on every shackle.
- Forged, Quenched & Tempered, with alloy bolts.
- Hot-dip galvanized (G) or self colored (S). 85, 120, and 150-metric ton shackles are all hot-dip galvanized bows and the bolts are Dimetcoted® and painted red.
- Sizes 3/8 and below are mechanically galvanized.
- Fatigue rated to 20,000 cycles at 1-1/2 times the Working Load Limit (1/3t - 55t).
- Approved for use at -40° C (-40° F) to 204° C (400° F).
- Meets or exceeds all requirements of ASME B30.26.
- Shackles 85 metric tons and larger are individually proof tested to 2.0 times the working load limit.
- Type Approval certification in accordance with ABS 2016 Steel Vessel Rules ABS Guide for Certification of Lifting Appliances available. Certificates available when requested at time of order and may include additional charges.
- 3.1 Certification as standard available for charpy and statistical proof test from 3.25t up to 25 tons to DNV 2.7-1 and EN13889.
- Crosby 3.25t through 25t G-2130OC anchor shackles are type approved to DNV Certification Notes 2.7-1-Offshore Containers. These Crosby shackles are statistical proof and impact tested to 42 Joules (31 ft-lb) min. avg. at -20° C (-4° F). The tests are conducted by Crosby and 3.1 test certification is available upon request.
- All other 2130 shackles can meet charpy requirements of 42 Joules (31 ft-lb) avg at -20° C (-4° F) when requested at time of order.
- Meets the performance requirements of Federal Specification RR-C-271H, Type IVA, Grade A, Class 3, except for those provisions required of the contractor.
- Look for the Red Pin®... the mark of genuine Crosby quality.

G-2130 / S-2130 Bolt Type Anchor Shackles

Nominal Size (in)	Working Load Limit (t)	Stock No.			Weight Each (kg)	Dimensions (mm)										Tolerance (+ / - mm)	
		G-2130	S-2130	G-2130OC		A	B	C	D	E	F	H	L	M	N	C	A
3/16	0.33 ‡	1019464	-	-	.03	9.7	6.4	22.4	4.9	15.2	14.2	37.3	24.9	32.8	4.85		1.50
1/4	0.5	1019466	-	-	.05	11.9	7.9	28.7	6.4	19.8	15.5	46.7	32.5	39.6	6.35	1.50	1.50
5/16	0.75	1019468	-	-	.10	13.5	9.7	31.0	7.9	21.3	19.1	53.0	37.3	46.2	7.85	1.50	1.50
3/8	1	1019470	-	-	.15	16.8	11.2	36.6	9.7	26.2	23.1	63.0	45.2	55.1	9.65	1.50	1.50
7/16	1.5	1019471	-	-	.22	19.1	12.7	42.9	11.2	29.5	26.9	74.0	51.5	63.8	11.2	3.30	1.50
1/2	2	1019472	1019481	-	.36	20.6	16.0	47.8	12.7	33.3	30.2	83.5	58.5	71.1	12.7	3.30	1.50
5/8	3.25	1019490	1019506	1262013	.62	26.9	19.1	60.5	16.0	42.9	38.1	106	74.5	90.4	17.5	3.30	1.50
3/4	4.75	1019515	1019524	1262022	1.23	31.8	22.4	71.5	19.1	51.0	46.0	126	89.0	105	20.6	3.30	1.50
7/8	6.5	1019533	1019542	1262031	1.79	36.6	25.4	84.0	22.4	58.0	53.0	148	102	122	24.6	6.35	1.50
1	8.5	1019551	1019560	1262040	2.28	42.9	28.7	95.5	25.4	68.5	60.5	167	119	137	26.9	6.35	1.50
1-1/8	9.5	1019579	1019588	1262059	3.75	46.0	31.8	108	28.7	74.0	68.5	190	131	150	31.8	6.35	1.50
1-1/4	12	1019597	1019604	1262068	5.31	51.5	35.1	119	31.8	82.5	76.0	210	146	170	35.1	6.35	1.50
1-3/8	13.5	1019613	1019622	1262077	7.18	57.0	38.1	133	35.1	92.0	84.0	233	162	183	38.1	6.35	3.30
1-1/2	17	1019631	1019640	1262086	8.62	60.5	41.4	146	38.1	98.5	92.0	254	175	196	41.1	6.35	3.30
1-3/4	25	1019659	1019668	1262095	15.4	73.0	51.0	178	44.5	127	106	313	225	246	57.0	6.35	3.30
2	35	1019677	1019686	-	23.7	82.5	57.0	197	51.0	146	122	348	253	275	61.0	6.35	3.30
2-1/2	55	1019695	1019702	-	44.6	105	70.0	267	66.5	184	145	453	327	345	79.5	6.35	6.35
3	† 85	1019711	-	-	70	127	82.5	330	76.0	200	165	546	365	384	92.0	6.35	6.35
3-1/2	† 120 ‡	1019739	-	-	120	133	95.5	372	92.0	229	203	626	419	432	105	6.35	6.35
4	† 150 ‡	1019757	-	-	153	140	108	368	104	254	229	653	468	451	116	6.35	6.35

6:1 Design Factor. Maximum Proof Load is 2 times the Working Load Limit. For Working Load Limit reduction due to side loading applications, see Warnings & Applications..
† Individually Proof Tested with certification. ‡ Furnished with eye bolts for handling.

Load Rated Fatigue Rated TA TYPE APPROVED QUIC-CHECK® Q&T QUENCHED & TEMPERED MAXTOUGH® CE

APPLICATION AND WARNING INFORMATION SECTION 17

Copyright © 2023 The Crosby Group LLC All Rights Reserved

G-2150 / S-2150

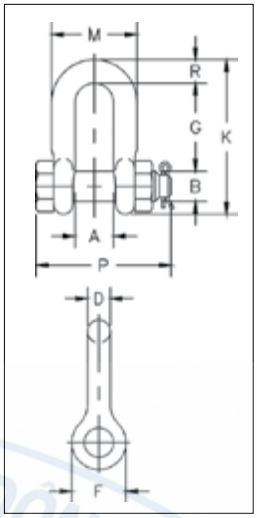

- Working Load Limit and Grade 6 permanently shown on every shackle.
- Forged, Quenched & Tempered, with alloy pins.
- Hot-dip galvanized (G) or self-colored (S). 85 ton shackles have hot-dip galvanized bows and the bolts are Dimetcoted® and painted red.
- Sizes 3/8 inch and below are mechanically galvanized.
- Fatigue rated to 20,000 cycles at 1-1/2 times the Working Load Limit. (1/2t - 55t).
- Approved for use at -40° C (-40 degrees F) to 204° C (400° F).
- Meets or exceeds all requirements of ASME B30.26.
- Sizes 1/2 - 25t meet the performance requirements of EN13889:2003.
- Shackles 55 metric tons and smaller can be furnished proof tested with certificates to designated standards, such as ABS, DNV, Lloyds, or other certification when requested at time of order.
- Type Approval certification in accordance with ABS 2016 Steel Vessel Rules and 2016 ABS Guide for Certification of Lifting Appliance. Certificates available when requested at time of order and may include additional charges.
- Meets the performance requirements of Federal Specification RR-C-271H, Type IVB, Grade A, Class 3, except for those provisions required of the contractor.
- All 2150 shackles can meet charpy requirements of 42 Joules (31 ft-lb) avg at -20° C (-4° F) upon special request.
- Look for the Red Pin®... the mark of genuine Crosby quality.

G-2150 / S-2150 Bolt Type Chain Shackles

Nominal Size (in)	Working Load Limit (t)*	Stock No. G-2150	Stock No. S-2150	Weight Each (kg)	Dimensions (mm) A	B	D	F	G	K	M	P	R	Tolerance (+ / - mm) G	A
1/4	0.5	1019768	-	.06	11.9	7.9	6.4	15.5	19.1	40.4	24.6	39.6	6.35	1.50	1.50
5/16	0.75	1019770	-	.10	13.5	9.7	7.9	19.1	25.4	48.5	29.5	46.2	7.85	1.50	1.50
3/8	1	1019772	-	.15	16.8	11.2	9.7	23.1	31.0	58.5	35.8	55.0	9.65	3.30	1.50
7/16	1.5	1019774	-	.22	19.1	12.7	11.2	26.9	36.1	67.5	41.1	63.5	11.2	3.30	1.50
1/2	2	1019775	1019784	.34	20.6	16.0	12.7	30.2	41.4	77.0	46.0	71.0	12.7	3.30	1.50
5/8	3.25	1019793	1019800	.67	26.9	19.1	16.0	38.1	51.0	95.5	58.5	89.5	16.0	3.30	1.50
3/4	4.75	1019819	1019828	1.14	31.8	22.4	19.1	46.0	60.5	115	70.0	103	20.6	6.35	1.50
7/8	6.5	1019837	1019846	1.74	36.6	25.4	22.4	53.0	71.5	135	81.0	120	24.6	6.35	1.50
1	8.5	1019855	1019864	2.52	42.9	28.7	25.4	60.5	81.0	151	93.5	135	25.4	6.35	1.50
1-1/8	9.5	1019873	1019882	3.45	46.0	31.8	28.7	68.5	91.0	172	103	150	31.8	6.35	1.50
1-1/4	12	1019891	1019908	4.90	51.5	35.1	31.8	76.0	100	191	115	165	35.1	6.35	1.50
1-3/8	13.5	1019917	1019926	6.24	57.0	38.1	35.1	84.0	111	210	127	183	38.1	6.35	3.30
1-1/2	17	1019935	1019944	7.72	60.5	41.4	38.1	92.0	122	230	137	196	41.1	6.35	3.30
1-3/4	25	1019953	1019962	14.2	73.0	51.0	44.5	106	146	279	162	230	54.0	6.35	3.30
2	35	1019971	1019980	21.2	82.5	57.0	51.0	122	172	312	184	264	60.0	6.35	3.30
2-1/2	55	1019999	1020004	38.6	105	70.0	66.5	145	203	377	238	344	66.5	6.35	6.35
3	† 85	1020013	-	56	127	82.5	76.0	165	216	429	279	419	89.0	6.35	6.35

6:1 Design Factor. Maximum Proof Load is 2 times the Working Load Limit. For Working Load Limit reduction due to side loading applications, see Warnings & Applications.
† Individually Proof Tested with certification.

APPLICATION AND WARNING INFORMATION
SECTION 17

Copyright © 2023 The Crosby Group LLC All Rights Reserved

Crosby

G-209A
Grade 8

- Forged alloy steel, Quenched & Tempered, with alloy pins.
- Meets performance requirements of Grade 8 shackles.
- Working Load Limit permanently shown on every shackle.
- Hot-dip galvanized.
- Size 3/8 inch is mechanically galvanized.
- Shackles can be furnished proof tested with certificates to designated standards, such as ABS, DNV, Lloyds, or other certification. Charges for proof testing and certification available when requested at the time of order.
- Approved for use at -40° C (-40° F) to 204° C (400° F).
- Meets or exceeds all requirements of ASME B30.26 including identification, ductility, design factor, proof load and temperature requirements. Importantly, these shackles meet other critical performance requirements including impact properties and material traceability, not addressed by ASME B30.26.
- G-209A Screw pin anchor shackles meet the performance requirements of Federal Specification RR-C-271H, Type IVA, Grade B, Class 2, except for those provisions required of the contractor.

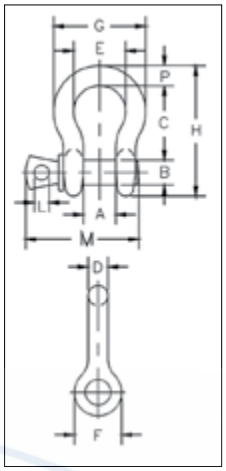

G-209A Alloy Screw Anchor Pin Shackles

Lead Rated QUIC-CHECK® Q&T CE

APPLICATION AND WARNING INFORMATION SECTION 17

Nominal Size (in)	Working Load Limit (t)	Stock No.	Weight Each (kg)	Dimensions (mm) A	B	C	D	E	F	G	H	L	M	P	Tolerance (+ / - mm) C	A
3/8	2	1017450	.14	16.8	11.2	36.6	9.65	26.2	23.1	45.2	63.5	6.35	51.5	9.65	3.30	1.50
7/16	2.67	1017472	.17	19.1	12.7	42.9	11.2	29.5	26.9	51.5	74.0	7.85	60.5	11.2	3.30	1.50
1/2	3.33	1017494	.29	20.6	16.0	47.8	12.7	23.3	30.2	58.5	83.5	9.65	68.5	12.7	3.30	1.50
5/8	5	1017516	.63	26.9	19.1	60.5	16.0	42.9	38.1	74.5	106	11.2	85.0	17.5	3.30	1.50
3/4	7	1017538	1.02	31.8	22.4	71.5	19.1	51.0	46.0	89.0	126	12.7	101	20.6	6.35	1.50
7/8	9.5	1017560	1.53	36.6	25.4	84.0	22.4	58.0	53.0	102	148	12.7	114	24.6	6.35	1.50
1	12.5	1017582	2.41	42.9	28.7	95.5	25.4	68.5	60.5	119	167	14.2	129	26.9	6.35	1.50
1-1/8	15	1017604	3.09	46.0	31.8	108	29.5	74.0	68.5	131	190	16.0	142	31.8	6.35	1.50
1-1/4	18	1017626	4.31	51.5	35.1	119	32.8	82.5	76.0	146	210	17.5	156	35.1	6.35	1.50
1-3/8	21	1017648	6.01	57.0	38.1	133	36.1	92.0	84.0	162	233	19.1	174	38.1	6.35	3.30

4.5:1 Design Factor. Maximum Proof Load is 2 times the Working Load Limit (metric tons) and 2.2 times the Working Load Limit (short tons).
For Working Load Limit reduction due to side loading applications, see Warnings & Applications.

G-2169

S-2169

- Quenched & Tempered for maximum strength.
- Forged alloy steel.
- Available in galvanized (G) and self colored (S) finish.
- Can be individually proof tested and magnetic particle inspected upon request. Crosby certification available at time of order.
- Meets or exceeds all requirements of ASME B30.26 including identification, ductility, design factor, proof load and temperature requirements. Importantly, these shackles meet other critical performance requirements including fatigue life, impact properties and material traceability, not addressed by ASME B30.26.
- Look for the Red Pin®... the mark of genuine Crosby quality.

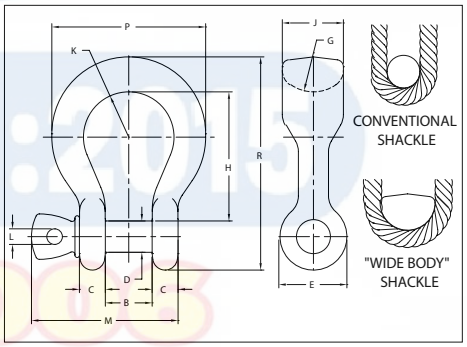

G-2169 / S-2169 Alloy Screw Pin Wide Body Shackles

Lead Rated Q&T

APPLICATION AND WARNING INFORMATION SECTION 17

Working Load Limit (t)	G-2169 Stock No.	S-2169 Stock No.	Weight Each (kg)	Dimensions (mm) B +/- .25	C	D +/- .02	E	G	H	J	K	L	M	P	R
7	1021655	1021664	1.6	31.8	17.5	22.4	46.2	31.8	90.4	40.6	31.8	12.7	101	104	149
12.5	1021673	1021682	4.0	42.9	23.4	28.7	60.5	34.8	118	54.1	41.4	14.2	130	140	194
18	1021691	1021699	5.9	51.6	29.5	35.1	68.3	38.1	148	63.5	50.8	17.5	159	172	238

5:1 Design Factor. Proof Load is 2 times the Working Load Limit.

Copyright © 2023 The Crosby Group LLC All Rights Reserved

G-2130A
Grade 8

- Forged alloy steel, Quenched & Tempered, with bow and bolt.
- Meets or exceeds all requirements of Grade 8 shackles.
- Working Load Limit permanently shown on every shackle.
- Hot-dip galvanized.
- Meets or exceeds all requirements of ASME B30.26, including identification, ductility, design factor, proof load, and temperature requirements. Importantly, G-2130A meet other critical performance requirements, including impact properties, and material traceability not addressed by ASME B30.26.
- Shackles can be furnished proof tested with certificates to designated standards, such as ABS, DNV, Lloyds, or other certification when requested at time of order.
- Type Approval and certification in accordance with DNV 2.7-1 offshore containers.
- Shackles are Quenched & Tempered and meet DNV impact requirements of 42 Joules (31 ft-lb) at -40° C (-40° F).
- G-2130A Bolt Type Anchor shackles with thin head bolt – nut with cotter pin. Meets the performance requirements of Federal Specification RR-C-271H, Type IVA, Grade B, Class 3, except for those provisions required of the contractor.

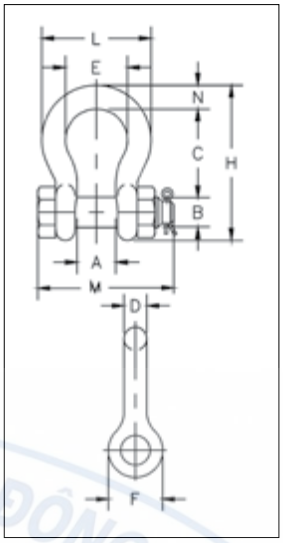

G-2130A Alloy Bolt Type Anchor Shackles Grade 8

Nominal Size (in)	Working Load Limit (t)*	Stock No.	Weight Each (kg)	Dimensions (mm)										Tolerance (+ / - mm)	
				A	B	C	D	E	F	H	L	M	N	C	A
1/2	2	1219472	.36	20.6	16.0	47.8	12.7	33.3	30.2	83.5	58.5	71.1	12.7	3.30	1.50
5/8	3.25	1219491	.62	26.9	19.1	60.5	16.0	42.9	38.1	106	74.5	90.4	17.5	6.35	1.50
3/4	4.75	1219516	1.23	31.8	22.4	71.5	19.1	51.0	46.0	126	89.0	105	20.6	6.35	1.50
7/8	6.5	1219534	1.79	36.6	25.4	84.0	22.4	58.0	53.0	148	102	122	24.6	6.35	1.50
1	8.5	1219552	2.28	42.9	28.0	95.5	25.4	68.5	60.5	167	119	137	26.9	6.35	1.50
1-1/8	9.5	1219578	3.75	46.0	31.8	108	28.7	74.0	68.5	190	131	150	31.8	6.35	1.50
1-1/4	12	1219598	5.31	51.5	35.1	119	31.8	82.5	76.0	210	146	170	35.1	6.35	1.50
1-3/8	13.5	1219614	7.18	57.0	38.1	133	35.1	92.0	84.0	233	162	183	38.1	6.35	3.30
1-1/2	17	1219632	8.62	60.5	41.4	146	38.1	98.5	92.0	254	175	196	41.1	6.35	3.30

8:1 Design Factor. Maximum Proof Load is 2 times the Working Load Limit. For Working Load Limit reduction due to side loading applications, see Warnings & Applications..

APPLICATION AND WARNING INFORMATION
SECTION 17

Copyright © 2023 The Crosby Group LLC All Rights Reserved

Crosby

G-2140 / S-2140

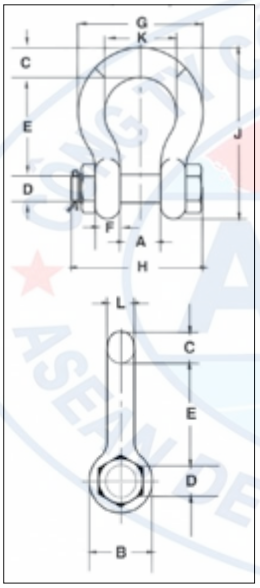

- Quenched & Tempered.
- Alloy bows, alloy bolts.
- Forged alloy steel 2 through 250 metric tons. Cast alloy steel 400 metric tons.
- Meets performance requirements of Grade 8 shackles.
- Working Load Limit is permanently shown on every shackle.
- 30, 40, 55, and 85 metric ton shackle bows are available galvanized (G) or self colored (S) with bolts that are galvanized and painted red.
- Size 3/8 inch is mechanically galvanized.
- 120, 150, 175 metric ton shackle bows are hot-dip galvanized; bolts are Dimetcoted and painted red.
- 200, 250, 300, 400 metric ton shackle bows are Dimetcoted; bolts are Dimetcoted and painted red.
- Approved for use at -40° C (-40° F) to 204° C (400° F).
- Shackles are Quenched & Tempered and can meet DNV impact requirements of 42 Joules (31 ft-lb) at -20° C (-4° F).
- Crosby COLD TUFF® shackles that meet the additional requirements of DNV rules for certification of lifting applications - loose gear are available.
- Shackles 200 metric tons and larger are provided as follows:
  - Serialized bolt and bow
  - Material certification (chemical)
  - Magnetic particle inspected.
  - Certification must be requested at time of order.
- Meets or exceeds all requirements of ASME B30.26 including identification, ductility, design factor, proof load and temperature requirements. 2140 shackles meet other critical performance requirements including impact properties and material traceability, not addressed by ASME B30.26.
- Type Approval certification in accordance with ABS 2016 Steel Vessel Rules and 2016 ABS Guide for Certification of Lifting Appliances. Certificates are available when requested at time of order and may include additional charges.
- G-2140 meets the performance requirements of Federal Specification RR-C-271H, Type IVA, Grade B, Class 3, except for those provisions required of the contractor. For additional information, see Warnings & Applications.
- Look for the Red Pin®... the mark of genuine Crosby quality.

G-2140 / S-2140 Alloy Bolt Type Anchor Shackles

Nominal Shackle Size (in)	Working Load Limit (t)	Stock No.			Weight Each (kg)	Dimensions (mm)													Tolerance (+ / - mm)		
		G-2140	S-2140	G-2140OC		A	B	C	D	E	F	G	H	J	K	L	M	N	A	D	E
3/8	2	1021015	-	-	0.15	16.8	23.1	9.7	11.2	36.6	9.7	45.2	55.1	63.2	26.2	9.7	-	-	1.5	0.3	3.3
7/16	2.67	1021020	-	-	0.22	19.1	26.9	11.2	12.7	42.9	10.4	51.6	63.8	73.9	29.5	11.2	-	-	1.5	0.3	3.3
1/2	3.33	1021029	-	-	0.36	20.6	30.2	12.7	16.3	47.8	11.7	58.7	71.1	83.3	33.3	12.7	-	-	1.5	0.5	3.3
5/8	5	1021038	-	-	0.76	26.9	38.1	17.5	19.6	60.5	14.7	74.7	90.4	106.4	42.9	16.0	-	-	1.5	0.5	3.3
3/4	7	1021047	-	-	1.23	31.8	46.0	20.6	22.6	71.4	17.5	88.9	105.4	126.2	50.8	19.1	-	-	1.5	0.5	6.4
7/8	9.5	1021056	-	-	1.79	36.6	53.1	24.6	25.9	84.1	20.6	102.4	122.4	148.1	57.9	22.4	-	-	1.5	0.5	6.4
1	12.5	1021065	-	-	2.57	42.9	60.5	26.9	29.2	95.3	23.4	119.1	136.9	166.6	68.3	25.4	-	-	1.5	0.5	6.4
1-1/8	15	1021074	-	-	3.75	46.0	68.3	31.8	31.8	108.0	26.4	131.1	149.9	189.7	73.9	28.7	-	-	1.5	0.5	6.4
1-1/4	18	1021083	-	-	5.31	51.6	76.2	35.1	35.6	119.1	29.5	146.1	169.9	209.6	82.6	32.8	-	-	1.5	0.8	6.4
1-3/8	21	1021092	-	-	7.18	57.2	84.1	38.1	38.9	133.4	32.5	162.1	183.1	232.7	92.2	36.1	-	-	3.3	0.8	6.4
1-1/2	30	1021110	1021129	1262407	8.52	60.5	91.9	41.1	41.4	146	35.3	175	196	254	98.6	38.9	-	-	3.3	0.8	6.4
1-3/4	40	1021138	1021147	1262416	15.4	73.2	106	57.2	50.8	178	44.5	224	237	313	127	46.7	-	-	3.3	0.8	6.4
2	55	1021156	1021165	1262425	23.6	82.6	122	61.0	57.2	197	50.8	258	264	347	146	52.8	-	-	3.3	0.8	6.4
2-1/2	85	1021174	1021183	1262434	43.5	105	148	79.2	69.9	267	66.5	324	345	455	184	68.8	-	-	6.4	0.8	6.4
3	120	1021192	-	1262443	81	127	165	92.2	82.6	330	76.2	371	384	546	200	79.2	-	-	6.4	1.0	6.4
3-1/2	† 150	1021218	-	1262452	120	133	203	111	95.3	372	95.3	432	448	632	229	91.9	102	46	6.4	0.3	6.4
4	† 175	1021236	-	1262461	153	140	229	116	108	368	102	457	517	652	254	102	102	46	6.4	0.3	6.4
4-3/4	† 200	1021234	-	-	209	184	267	127	121	386	116	529	611	706	279	121	102	46	6.4	0.3	6.4
5	† 250	1021243	-	-	276	216	305	143	127	470	123	600	632	828	330	127	102	46	4.0	0.3	1.8
6	† 300	1021252	-	-	362	213	330	154	152	475	124	629	666	871	330	149	102	46	4.0	0.3	1.8
7*	† 400	1021478	-	-	500	210	356	184	178	572	165	660	728	1022	330	152	102	46	6.4	0.3	6.4

4.5:1 Design Factor for sizes 2 through 21 metric tons, 5.4:1 Design Factor for sizes 30 through 175 metric tons. 4:1 Design Factor for 200 through 400 metric tons. Maximum Proof Load is 2 times the Working Load Limit. *Cast alloy steel.†Furnished with round head bolts with a handle. For Working Load Limit reduction due to side loading applications, see Warnings & Applications.

APPLICATION AND WARNING INFORMATION SECTION 17

Copyright © 2023 The Crosby Group LLC All Rights Reserved

G-2140E

- Quenched & Tempered.
- Alloy bows, alloy bolts.
- Meets performance requirements of Grade 8 shackles.
- Working Load Limit is permanently shown on every shackle.
- 200, 250, and 300 metric ton shackle bows are Dimetcoted®; Pins are Dimetcoted and painted red.
- Approved for use at -40° C (-40° F) to 204° C (400° F).
- Shackles are Quenched & Tempered and can meet DNV impact requirements of 42 Joules (31 ft-lb) at -20° C (-4° F).
- All sizes are individually proof tested to 2.0 times the Working Load Limit.
- Shackles are provided as follows:
  - Serialized bolt and bow
  - Material certification (chemical)
  - Magnetic particle inspected
  - Certification must be requested at time of order
- Meets or exceeds all requirements of ASME B30.26 including identification, ductility, design factor, proof load and temperature requirements. Importantly, these shackles meet other critical performance requirements including impact properties and material traceability, not addressed by ASME B30.26.
- Type Approval certification in accordance with ABS 2016 Steel Vessel Rules and 2016 ABS Guide for Certification of Lifting Appliances. Certificates available when requested at time of order and may include additional charges.
- G-2140E meets the performance requirements of Federal Specification RR-C-271H, Type IVA, Grade B, Class 3, except for those provisions required of the contractor.
- Look for the Red Pin®... the mark of genuine Crosby quality.

G-2140E Alloy Easy-Loc Shackles

Nominal Shackle Size (in)	Working Load Limit (t)	Stock No.	Weight Each (kg)	Dimensions (mm)													Tolerance (+ / - mm)	
				A	B	C	D +/- .02	E	F	G	H	J	K	L	M	N	A	E
4-3/4	200	1021475	208	184	267	127	121	386	116	529	587	706	279	121	101	45.7	6.4	6.4
5	250	1021484	271	216	305	143	127	470	114	600	617	829	330	127	101	45.7	6.4	6.4
6	300	1021493	359	213	330	154	152	475	124	629	646	871	330	149	101	45.7	6.4	6.4

4:1 Design Factor. Maximum Proof Load is 2 times the Working Load Limit.For Working Load Limit reduction due to side loading applications, see Warnings & Applications.

APPLICATION AND WARNING INFORMATION SECTION 17

Copyright © 2023 The Crosby Group LLC All Rights Reserved

Shackle Bolt Securement

MADE EASY

The patented Easy-Loc V2™ shackle bolt securement system will change the way you make your critical lifts.

1 Open collar

2 Push collar onto bolt

3 Close collar

- No cotter pins or tools required, reducing install/release time up to 90%.
- Meets all industry standards.
- Up to 60% lighter than conventional nut and cotter pin design.

Crosby®

Watch video: **thecrosbygroup.com/easy-loc**

G-2160 / S-2160

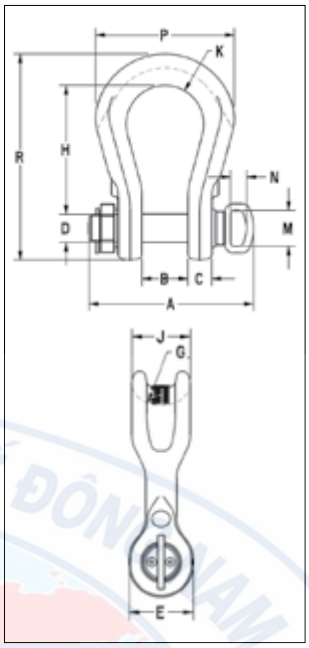

- Increase in shackle bow radius provides minimum 58% gain in sling bearing surface and eliminates need for a thimble.
- Increases usable sling strength a minimum of 15% and greatly improves life of wire rope slings.
- Can be used to connect synthetic web slings, synthetic round slings or wire rope slings.
- All sizes Quenched & Tempered for maximum strength.
- Forged alloy steel from 7 through 300 metric tons.
- Cast alloy steel from 400 through 1550 metric tons.
- Proof tested as follows:
  - 7 through 75 metric tons and 200 through 300 metric tons: 2 x WLL
  - 125 metric tons: 1.6 x WLL
  - 400 metric tons and higher: 1.33 x WLL
- All ratings are in metric tons, embossed on side of bow.
- G-2160, (7 through 55t), are hot-dip galvanized and pins are painted red.
- G-2160 (75t and larger), bows are furnished Dimetcoted; Pins are Dimetcoted, then painted red.
- S-2160 bows and pins are painted red.
- Approved for use at -40° C (-40° F) to 204° C (400° F).
- Bow and bolt are certified to meet Charpy impact testing of 42 Joules (31 ft-lb) min. avg. at -20° C (-4° F).
- All 2160 shackles are individually proof tested and magnetic particle inspected. Crosby certification available at time of order.
- Shackles requiring ABS, Lloyds and other certifications are available upon special request and must be specified at time of order.
- Type approved and certification to DNV Rules for Certification of Lifting Appliances, and are produced in accordance with DNV MSA requirements. Databook is provided that includes required documents.
  - Serialization / Identification
  - Material Testing (physical / chemical / Charpy)
  - Proof Testing
- Look for the Red Pin®... the mark of genuine Crosby quality.

G-2160 / S-2160 Wide Body Shackles

Working Load Limit (t)*	Stock No.		Weight Each (kg)	Dimensions (mm)													
	G-2160	S-2160		A	B +/- 6.35	C	D +/- .5	E	G	H	J	K	M	N	P	R	Effective Body Diameter
7	1021256	1021548	1.81	105	31.8	17.5	22.4	46.2	31.8	90.4	40.6	31.8	-	-	104	149	53.3
12.5	1021265	1021557	4.54	137	42.9	23.4	28.7	60.5	34.8	118	54.1	41.4	-	-	140	194	61.0
18	1021274	1021566	6.8	170	51.6	29.5	35.1	68.3	38.1	148	63.5	50.8	-	-	172	238	71.1
30	1021283	1021575	11.34	195	60.2	35.1	41.4	88.9	63.5	176	79.5	63.5	-	-	216	289	104
40	1021285	1021584	20.9	236	73.2	42.9	50.8	102	44.4	205	95.3	76.2	-	-	270	346	91.4
55	1021287	1021593	32.21	263	82.6	50.8	57.2	118	66.8	238	114	88.9	-	-	311	397	109
75	1022101	-	51	382	105	60.7	69.9	136	95.3	293	127	92.5	102	45.7	321	474	160
125	1022110	-	87	465	130	78.7	80.0	165	95.3	365	150	110	102	45.7	393	584	173
200	1022118	-	191	491	150	86.1	105	214	133	480	217	138	102	45.7	515	773	241
300	1022127	-	365	574	187	109	133	267	156	600	264	160	102	45.7	608	957	290
400	1021334	-	518	772	220	131	160	320	203	575	320	185	102	45.7	690	985	363
500	1021343	-	653	849	250	146	180	340	205	630	340	225	102	45.7	790	1085	376
600	1021352	-	967	916	275	158	200	394	330	700	370	247	146	57.2	865	1200	516
700	1021361	-	1170	990	300	167	215	433	223	735	400	270	146	57.2	940	1275	422
800	1021254	-	1372	1059	325	185	230	449	248	750	420	277	146	57.2	975	1323	457
900	1021389	-	1712	1112	350	198	250	478	330	757	440	293	146	57.2	1025	1387	569
1000	1021370	-	1850	1169	380	212	270	508	261	760	460	308	146	57.2	1075	1405	490
1250	1021272	-	2588	1278	432	233	300	573	354	930	530	323	-	-	1175	1660	620
1550	1021281	-	3650	1588	465	282	320	616	318	1075	580	338	-	-	1316	1896	693

5:1 Design Factor on 75 through 300 metric tons. Maximum Proof Load is 2 times the Working Load Limit on 75 through 300 metric tons (except for 125 metric tons which is proof tested to 1.6 times the Working Load Limit). 4.5:1 Design Factor on 400 through 1550 metric tons. Maximum Proof Load is 1.33 times the Working Load Limit on 400 through 1550 metric tons.

APPLICATION AND WARNING INFORMATION SECTION 17

Copyright © 2023 The Crosby Group LLC All Rights Reserved

Crosby

G-2160E

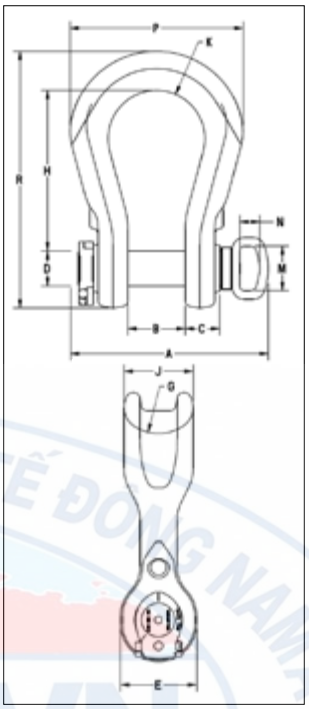

- Increase in shackle bow radius provides minimum 58% gain in sling bearing surface and eliminates need for a thimble.
- Increases usable sling strength a minimum of 15% and greatly improves life of wire rope slings.
- Can be used to connect synthetic web slings, synthetic round slings or wire rope slings.
- All sizes Quenched & Tempered for maximum strength.
- Forged alloy steel from 75 through 300 metric tons.
- Proof tested as follows:
  - 75 metric tons and 200-300 metric tons: 2 x WLL.
  - 125 metric tons: 1.6 x WLL.
- All ratings are in metric tons, embossed on side of bow.
- G-2160E, (75t and larger), bows are furnished Dimetcoted, and pins are Dimetcoted, then painted red.
- Approved for use at -40° C (-40° F) to 204 degrees C (400° F).
- Bow and bolt are certified to meet Charpy impact testing of 42 Joules (31 ft-lb) min. avg. at -20° C (-4 degrees F).
- All 2160E shackles are individually proof tested and magnetic particle inspected. Crosby certification available at time of order.
- Shackles requiring ABS, Lloyds and other certifications are available upon special request and must be specified at time of order.
- Shackles have DNV Type Approval to Rules for Certification of Lifting Appliances, and are produced in accordance with DNV MSA requirements. Databook is provided that includes required documents.
  - Serialization / Identification
  - Material Testing (physical / chemical / Charpy)
  - Proof Testing
- Look for the Red Pin®... the mark of genuine Crosby quality.

G-2160E Easy-Loc Wide Body Shackles

Working Load Limit (t)	Stock No.	Weight Each (kg)	Dimensions (mm)													
			A	B +/- 6.35	C	D +/- .5	E	G	H	J	K	M	N	P	R	Effective Body Diameter
75	1021500	49.9	382	105	60.7	69.9	136	95.3	293	127	92.5	102	45.7	321	474	160
125	1021509	86.2	450	130	78.7	80.0	165	95.3	365	150	110	102	45.7	393	584	173
200	1021518	185	491	150	86.1	105	214	133	480	219	138	102	45.7	515	773	241
300	1021527	357	574	187	109	133	267	156	600	264	160	102	45.7	608	953	290

5:1 Design Factor on 75 through 300 metric tons. Maximum Proof Load is 2 times the Working Load Limit on 75 through 300 metric tons (except for 125 metric tons which is proof tested to 1.6 times the Working Load Limit).

Lead Free TA TYPE APPROVED QUIC-CHECK® Q&T QUENCHED & TEMPERED

APPLICATION AND WARNING INFORMATION SECTION 17

Copyright © 2023 The Crosby Group LLC All Rights Reserved

S-2135 / S-2145

- Trusted Crosby quality.
- Embossed Angle Indicators included.
- Meets performance requirements of Grade 8 shackles.
- 5:1 Design Factor.
- Individually proof loaded to 2 times the Working Load Limit.
- S-2135 and S-2145 shackles are available with aluminum paint and are not galvanized.
- Operating temperature range -20° C (-4° F) to 200° C (392° F) for S-2135 and S-2145.
- Material inspection certificate Type 3.1 according to EN 10204.
- DNV type approved: DNVGL-ST-0377 and DNVGL-ST-0378.
- Meets performance requirements of federal specification RR-C-271H, except for those provisions required of the contractor.
- Meets or exceeds all requirements of ASME B30.26.
- S-2135CT COLD TUFF® available from 85t to 400t with an operating temperature range of -60°C (-76°F) up to +200°C (392°F).
- DNV witness proof testing available on request for all sizes and models.
- Magnetic Particle Inspection available on request for all sizes and models.
- Look for the Red Pin®... the mark of genuine Crosby quality.

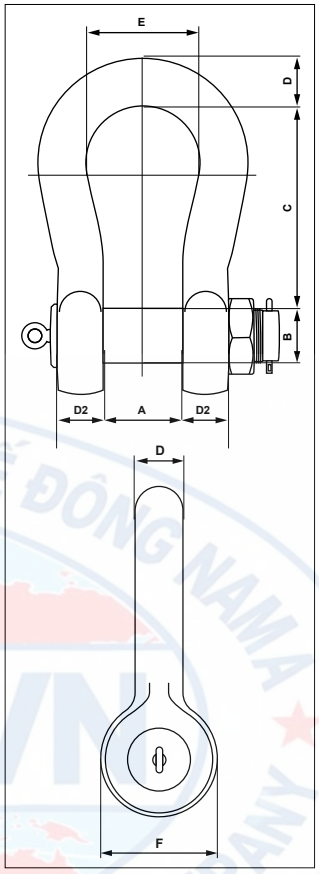

S-2135 / S-2145 Bolt Type Anchor Shackles

Frame Size (in)	Working Load Limit (t)	Stock No	Weight (kg)	Dimensions (mm)							
				A	+/- 0	B	C	D	D2	E	F
					S-2135						
3	85	1205009	78	127	+6 / -0	83	330	85	80	190	162
3 1/2	120	1205018	115	144	+6 / -0	95	380	95	89	238	200
4	150	1205027	162	165	+8 / -0	108	385	105	100	275	230
4 3/4	200	1205036	240	180	+8 / -0	125	450	120	110	280	270
5	250	1205045	306	205	+10 / -0	140	520	130	115	305	290
6	300	1205054	368	205	+10 / -0	150	530	140	120	305	315
7	400	1205063	602	230	+10 / -0	175	575	160	160	325	365
7 1/4	500	1205234	735	250	+12 / -0	185	650	180	160	350	385
8	600	1205243	969	275	+13 / -0	205	650	200	185	375	430
8 1/4	700	1205252	1091	300	+15 / -0	215	650	210	200	400	440
8 1/2	800	1205261	1106	300	+15 / -0	220	650	210	200	400	450
9 1/2	1000	1205270	1476	340	+17 / -0	240	700	240	240	420	500
10	1250	1205279	1955	360	+18 / -0	270	750	260	225	450	570
11	1500	1205288	2327	360	+18 / -0	290	800	280	225	450	610
					S-2145						
3	120	1205072	78	127	+6 / -0	83	330	85	80	190	162
3 1/2	150	1205081	115	144	+6 / -0	95	380	95	89	238	200
4	175	1205090	162	165	+8 / -0	108	385	105	100	275	230

Maximum Proof Load is 2.0 times the Working Load Limit.

Load Rated Fatigue Rated TA TYPE APPROVED QUIC-CHECK® Q&T QUENCHED & TEMPERED MAXTOUGH®

APPLICATION AND WARNING INFORMATION SECTION 17

Copyright © 2023 The Crosby Group LLC All Rights Reserved

Crosby

G-2130CT / G-2140CT

- Forged, Quenched & Tempered, with alloy bolt.
  - G-2130CT - carbon steel
  - G-2140CT - alloy steel
- Working Load Limit permanently shown on every shackle.
- Individually serialized with certification.
- Fatigue Rated (G-2130CT only).
- All sizes are individually proof tested to 2.0 times the Working Load Limit.
- Finish is inorganic zinc primer.
- Bow and bolt are certified to meet Charpy impact testing of 42 Joules (31 ft-lb) min. avg. at -20° C (-4° F).
- Individually magnetic particle inspected with certification.
- Type Approval and certification in accordance with DNV 2.7-1 Offshore Containers, and Rules for Certification of Lifting Appliances, DNV-OS-E101 and are produced in accordance with DNV MSA requirements, including required documents.
- DNV certified minimum design temperature -4° F. May be used at -50° F (-45° C) in non DNV applications.
- Meets the performance requirements of Federal Specification RR-C-271H Type IVA:
  - G-2130CT - Grade A, Class 3, except for those provisions required of the contractor.
  - G-2140CT - Grade B, Class 3, except for those provisions required of the contractor.

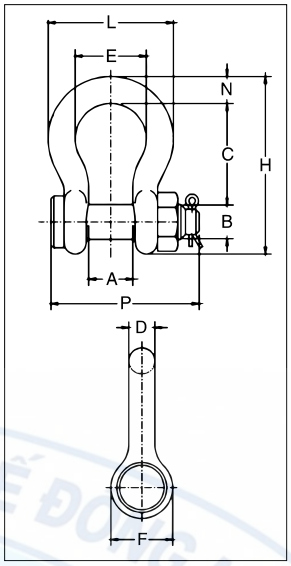

G-2130CT COLD TUFF® Bolt Type Anchor Shackles

Nominal Shackle Size (in)	Working Load Limit (t)	Stock No.	Weight Each (kg)	Dimensions (mm)										Tolerance (+ / - mm)	
				A	B	C	D	E	F	H	L	N	P	A	C
3/4	4.75	1260568	1.23	31.8	22.4	71.5	19.1	51.0	46.0	126	89.0	20.6	108	1.50	6.35
7/8	6.5	1260577	1.76	36.6	25.4	84.0	22.4	58.0	53.0	148	102	24.6	120	1.50	6.35
1	8.5	1260586	2.57	42.9	28.7	95.5	26.2	68.5	60.5	167	119	26.9	137	1.50	6.35
1-1/8	9.5	1260595	3.75	46.0	31.8	108	28.7	74.0	68.5	190	131	31.8	150	1.50	6.35
1-1/4	12	1260604	5.31	51.5	35.1	119	32.8	82.5	76.0	210	146	35.1	168	1.50	6.35
1-3/8	13.5	1260613	6.85	57.0	38.1	133	35.1	92.0	84.0	233	162	38.1	183	3.30	6.35
1-1/2	17	1260622	9.43	60.5	41.4	146	39.1	98.5	92.0	254	175	41.1	195	3.30	6.35
1-3/4	25	1260633	15.4	73.0	51.0	178	46.7	127	106	313	225	57.0	233	3.30	6.35

5.4:1 Design Factor. Maximum Proof Load is 2 times the Working Load Limit. For Working Load Limit reduction due to side loading applications, see Warnings & Applications.

G-2140CT COLD TUFF® Alloy Bolt Type Anchor Shackles

Nominal Shackle Size (in)	Working Load Limit (t)	Stock No.	Weight Each (kg)	Dimensions (mm)										Tolerance (+ / - mm)	
				A	B	C	D	E	F	H	L	N	P	A	C
1-1/2	30	1260801	9.43	60.5	41.4	146	38.9	98.6	91.9	254	175	41.1	196	3.3	6.4
1-3/4	40	1260812	15.4	73.2	50.8	178	46.7	127	106	313	224	57.2	237	3.3	6.4
2	55	1260823	23.6	82.6	57.2	197	52.8	146	122	347	258	61.0	264	3.3	6.4
2-1/2	85	1260834	43.5	105	69.9	267	68.8	184	148	455	324	79.2	345	6.4	6.4
3	120	1260843	81	127	82.6	330	79.2	200	165	546	371	92.2	384	6.4	6.4
3-1/2	† 150	1260852	120	133	95.3	372	91.9	229	203	632	432	111	448	6.4	6.4
4	† 175	1260861	153	140	108	368	102	254	229	652	457	116	517	6.4	6.4
4-3/4	† 200	1260870	204	184	121	397	114	279	267	743	533	152	539	6.4	6.4
5	† 250	1260889	272	216	127	508	114	330	305	889	622	165	576	6.4	6.4

5.4:1 Design Factor on 30t through 175 metric tons. 4:1 Design Factor on 200 metric tons and larger. Maximum Proof Load is 2 times the Working Load Limit for all sizes.

Load Rated · Fatigue Rated · TA TYPE APPROVED · QUIC-CHECK® · Q&T QUENCHED & TEMPERED · MAXTOUGH® · CE

APPLICATION AND WARNING INFORMATION SECTION 17

Copyright © 2023 The Crosby Group LLC All Rights Reserved

S-209T

- Flat black baked on powder coat finish.
- Forged, Quenched & Tempered, with alloy pins.
- Working Load Limit and Grade 6 permanently shown on every shackle.
- Fatigue rated to 20,000 cycles at 1-1/2 times the Working Load Limit.
- Industry leading 6 to 1 Design Factor.
- Screw pin anchor shackles meet the performance requirement of Federal Specification RR-C-271H, Type IVA, Grade A, Class 2, except for those provisions required of the contractor.
- Meets the performance requirements of EN 13889.
- Meets or exceeds all requirements of ASME B30.26 including identification, ductility, design factor, proof load and temperature requirements. Importantly, these shackles meet other critical performance requirements including fatigue life, impact properties and material traceability, not addressed by ASME B30.26.

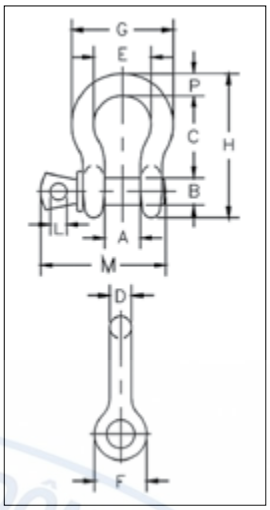

S-209T Theatrical Shackles

Nominal Size (in)	Working Load Limit (t)	Stock No.	Weight Each (kg)	Dimensions (mm)											Tolerance (+ / - mm)	
				A	B	C	D	E	F	G	H	L	M	P	C	A
3/8	1	1018706	.14	16.8	11.2	36.6	9.65	26.2	23.1	45.2	63.0	6.35	51.5	9.65	3.30	1.50
7/16	1.5	1018724	.17	19.1	12.7	42.9	11.2	29.9	26.9	51.5	74.0	7.85	60.5	11.2	3.30	1.50
1/2	2	1018742	.33	20.6	16.0	47.8	12.7	33.3	30.2	58.5	83.5	9.65	68.5	12.7	3.30	1.50
5/8	3.25	1018760	.62	26.9	19.1	60.5	16.0	42.9	38.1	74.5	106	11.2	85.0	17.5	6.35	1.50
3/4	4.75	1018778	1.07	31.8	22.4	71.5	19.1	51.0	46.0	89.0	126	12.7	101	20.6	6.35	1.50

Maximum Proof Load is 2.0 times the Working Load Limit.

Load Rated Fatigue Rated QUIC-CHECK® Q&T MAXTOUGH®

APPLICATION AND WARNING INFORMATION SECTION 17

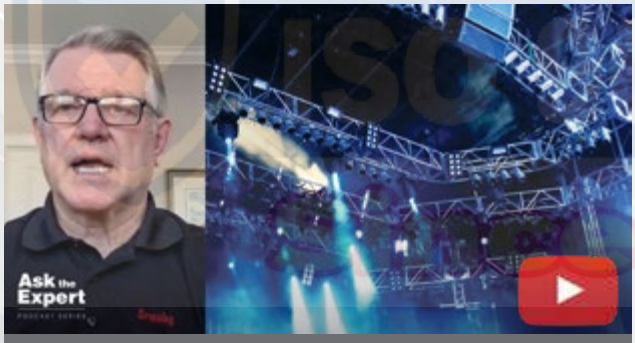

Ep. 46 Shackles designed for theatrical applications

VIDEO PODCAST SERIES

Our experts answer some of your most common safe rigging, lifting, and securement questions in our video podcast series, *Ask the Expert*.

Watch all episodes and submit your questions at thecrosbygroup.com/podcast, and subscribe to our YouTube channel to catch every new video as soon as it's released.

Ep. 36 Lifting & Mooring Fatigue: What is it and how to avoid it?

Ep. 5 Hooks: Why the tips must point outward on multiple bridles

Ask the Expert VIDEO PODCAST

Copyright © 2023 The Crosby Group LLC All Rights Reserved

Crosby®

QUIC-TAG™

THE NEWEST ADDITION TO CROSBY'S RFID TAG FAMILY

Industry standards require periodic performance inspections to make sure lifting equipment is performing to specified levels.

The Crosby QUIC-TAG™ makes the inspection process more efficient, and its unique design can be retrofitted on numerous products.

- Easy, fast, and secure attachment
- Engineered for extreme durability and strength with a low profile design
- Resistant to harsh environmental conditions including exposure to UV rays, water chemical exposure and temperatures up to 85˚C (185˚F)
- Compatible with the Crosby QUIC-CHECK® Inspection and Identification System
- 13.5 MHz operating frequency
- The most cost effective RFID tag offered by Crosby

QUIC-CHECK®

Shown actual size:

Copyright © 2022 The Crosby Group LLC All Rights Reserved

Feel confident in every situation

Gunnebo Industries shackles are made from a range of steel qualities, including acid proof stainless steel and high-grade alloy steel to comply with the most stringent specifications. Our factories comprise all facilities and systems for the manufacturing and control of a top-quality product. This includes tool design, an advanced tool shop, forging, heat treatment, machining, hot-dip galvanizing and quality control.

We offer a range of DNV 2.7-1 Type Approved lifting shackles for offshore containers, developed for the tough conditions of the offshore industry, where safety must be of the highest priority at all times. The heat treatment of these products ensures the proper ductility and strength to sustain shock loads which may be imposed when the container is lifted from the deck of a vessel.

Make sure you have the original

- High quality shackles acc. EN 13889 and US Fed. Spec RR-C. 271 (Grade A and Grade B)
- Consistent product quality
- Long experience of shackle production using modern manufacturing methods
- Local availability of expertise

To ensure you have a genuine Gunnebo Industries shackle, it should be marked as below:

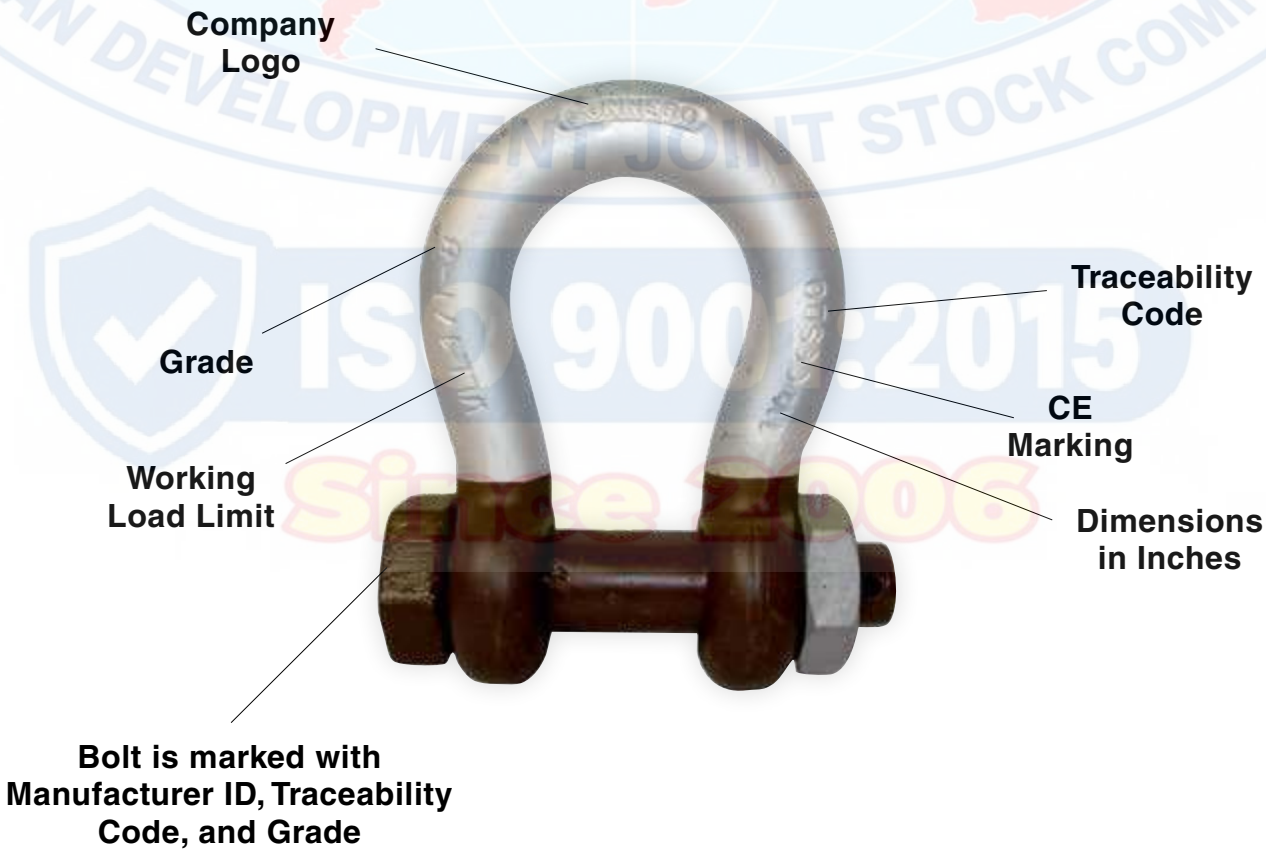

Copyright © 2023 The Crosby Group LLC All Rights Reserved

GUNNEBO Industries

Dee Shackle No 834 and No 835

Standard: DNV 2.7-1 Type Approved, EN 13889 and US Federal Spec. RR-C-271

Material: High tensile carbon steel, Quenched & Tempered, Grade 6

Finish: All parts hot-dip galvanized, pin brown painted on top of galvanized.

Design Factor: 6:1

Documentation: Test certificate and traceable raw material / inspection certificate acc. EN 10204 - 3.1.
DNVGL-ST-E271-2.7-1 and E273-2.7-3 Type Approval Certification.

Temperature: - 40°C to 200°C

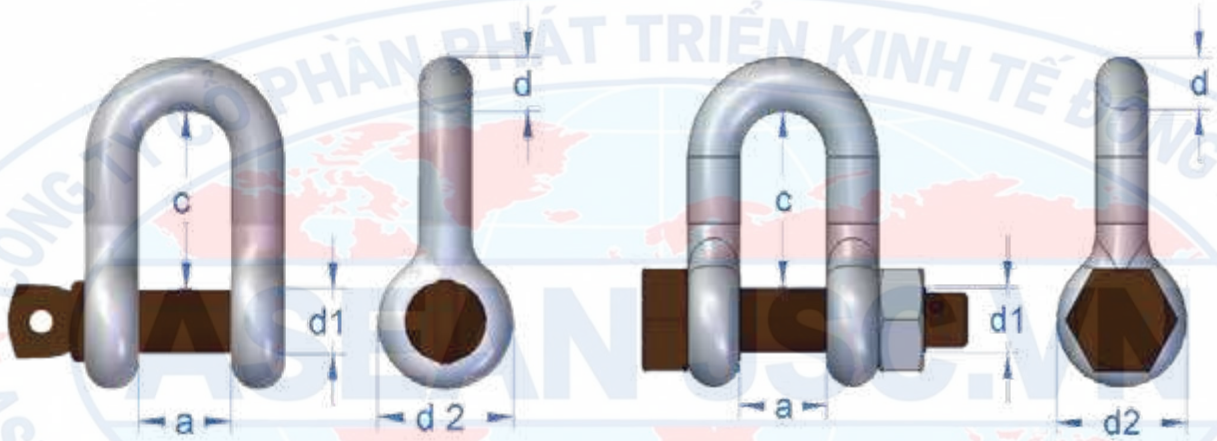

Shackle No 834 with screw pin

Shackle No 835 with safety bolt

CE

834 Screw Pin Stock No.	835 Safety Bolt Stock No.	WLL (t) 6:1	Pin d1 (mm)	Nominal Size d		Inner Width a* (mm)	Inner Length c* (mm)	Eye Outer d2 (mm)	834 Screw Pin Weight (kg)	835 Safety Bolt Weight (kg)
				(mm)	(in)					
A083416	A083516	3.25	19	16	5/8”	27	51	40	0.55	0.60
A083419	A083519	4.75	22	19	3/4”	31	60	48	1.00	1.10
A083422	A083522	6.5	25	22	7/8”	37	71	52	1.30	1.50
A083425	A083525	8.5	28	25	1”	43	81	60	1.90	2.20
A083428	A083528	9.5	32	28	1 1/8”	46	90	64	2.80	3.10
A083432	A083532	12.0	35	32	1 1/4”	52	100	72	3.60	4.20
A083435	A083535	13.5	38	35	1 3/8”	57	111	76	4.60	5.60
A083438	A083538	17.0	42	38	1 1/2”	60	122	84	6.50	7.50
A083445	A083545	25.0	50	45	1 3/4”	74	149	105	11.50	13.00

* Forging tolerance: +/- 5% on inside width/length.

Split pin included

Copyright © 2023 The Crosby Group LLC All Rights Reserved

Bow Shackle No 854 and No 855

Standard: DNV 2.7-1 Type Approved, EN 13889 and US Federal Spec. RR-C-271

Material: High tensile carbon steel, Quenched & Tempered, Grade 6

Finish: All parts hot-dip galvanized, brown painted bolts on top of galvanized.

Design Factor: 6:1

Documentation: Test certificate and traceable raw material / inspection certificate acc. EN 10204 - 3.1.
DNVGL-ST-E271-2.7-1 and E273-2.7-3 Type Approval Certification.

Temperature: - 40°C to 200°C

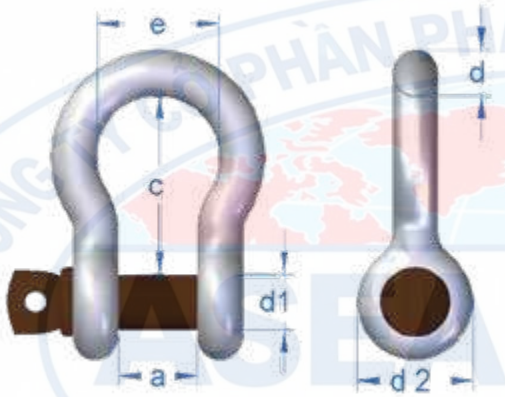

Shackle No 854 with screw pin

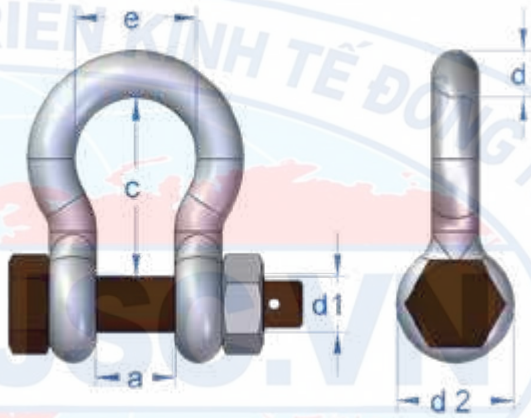

Shackle No 855 with safety bolt

CE

854 Screw Pin Stock No.	855 Safety Bolt Stock No.	WLL (t) 6:1	Pin d1 (mm)	Nominal Size d		Inner Width a* (mm)	Inner Length c* (mm)	Bow Width e (mm)	Eye Outer d2 (mm)	854 Screw Pin Weight (kg)	855 Safety Bolt Weight (kg)
				(mm)	(in)						
A085413	A085513	2.0	16	13	1/2”	21	47	33	33	0.37	0.42
A085416	A085516	3.25	19	16	5/8”	27	60	42	40	0.65	0.70
A085419	A085519	4.75	22	19	3/4”	31	71	49	48	1.10	1.20
A085422	A085522	6.5	25	22	7/8”	37	84	60	52	1.50	1.70
A085425	A085525	8.5	28	25	1”	43	95	68	60	2.21	2.58
A085428	A085528	9.5	32	28	1 1/8”	46	108	74	64	3.10	3.40
A085432	A085532	12.0	35	32	1 1/4”	52	119	83	72	4.20	4.80
A085435	A085535	13.5	38	35	1 3/8”	57	132	89	76	6.00	7.00
A085438	A085538	17.0	42	38	1 1/2”	60	146	98	84	8.00	9.00
A085445	A085545	25.0	50	45	1 3/4”	74	178	127	105	13.50	15.00
A085452	A085552	35.0	57	50	2”	83	197	138	112	19.00	21.00
A085464	A085564	55.0	70	65	2 1/2”	105	260	180	145	38.00	39.00

Split pin included

Copyright © 2023 The Crosby Group LLC All Rights Reserved

GUNNEBO Industries

Arctic Shackle No 856

Bow shackle with safety bolt

Unique benefits with the Arctic Shackle

Adverse weather and rough sea conditions in combination with extremely low temperatures, as often encountered for instance in the North Sea, places tough requirements on the products used. 856 Arctic shackles are specially designed for these conditions. The Arctic Shackle is type approved to DNV 2.7-1 Offshore containers and meets the impact requirements of 42 J at – 40 degrees ºC.

The Arctic Shackle is a grade 8 shackle with all parts hot-dip galvanized, including the safety bolt, and has the characteristic brown color marking.

Standard: DNV 2.7-1, US Federal Spec. RR.C-271 and EN-13889

Material: Special alloy steel, Quenched & Tempered, Grade 8

Finish: All parts hot-dip galvanized + brown color marking

Design Factor: As specified in the table below

Documentation: Test certificate and traceable raw material / inspection certificate acc. EN 10204 - 3.1. DNVGL-ST-E271-2.7-1 and E273-2.7-3 Type Approval Certification.

Temperature: - 40°C to 200°C

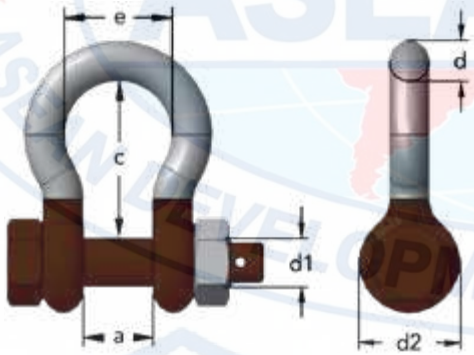

CE

Stock No.	WLL (t)	Design Factor	Pin d1 (mm)	Nominal Size d		Inner Width a (mm)	Inner Length c (mm)	Eye Outer e (mm)	Bow Width d2 (mm)	Weight (kg)
				(mm)	(in)					
A085613	2.0	8.00	16	13	1/2”	21	47	33	33	0.42
A085616	3.25	8.00	19	16	5/8”	27	60	42	40	0.7
A085619	4.75	8.00	22	19	3/4”	31	71	49	48	1.2
A085622	6.5	7.85	25	22	7/8”	37	84	60	52	1.7
A085625	8.5	7.25	28	25	1”	43	95	68	60	2.5
A085628	9.5	6.94	32	28	1 1/8”	46	108	74	64	3.4
A085632	12.0	6.40	35	32	1 1/4”	52	119	83	72	4.8
A085635	13.5	6.10	38	35	1 3/8”	57	132	89	76	7
A085638	17.0	6.00	42	38	1 1/2”	60	146	98	84	9
A085645	25.0	6.00	50	45	1 3/4”	74	178	127	105	15
A085652	35.0	6.00	57	50	2”	83	197	138	116	21
A085664	55.0	6.00	70	65	2 1/2”	105	260	180	145	39

Split pin included

Copyright © 2023 The Crosby Group LLC All Rights Reserved

Super Shackle No 858

Bow shackle with safety bolt

Unique Benefits with The Super Shackle

In certain situations a demand for extra Working Load Limit occurs in others the lifting environment has limited space for the lifting application. The 858 Super Shackle enables a higher working load limit for the same nominal size.

The Super shackle meets the US Federal Specification RR.C-271. It is a grade 8 shackle and has all parts hot dipped galvanized, including the safety bolt.

Standard:	US Federal Spec. RR.C-271 Type IVA Class 3, Grade B
Material:	High tensile steel. Quenched & Tempered, Grade 8
Finish:	All parts hot-dip galvanized + brown color marking
Design Factor:	5:1
Documentation:	Test certificate and traceable 3.1 certificate
Temperature:	-40°C to 200°C

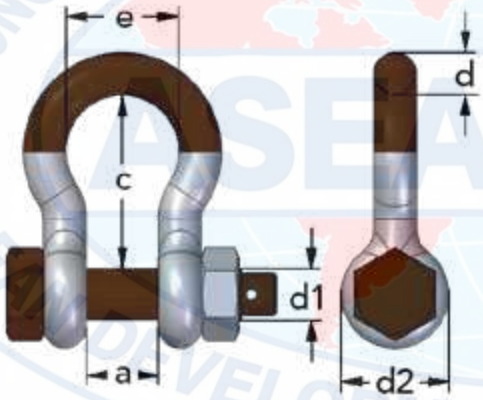

CE

Stock No.	WLL (t) 5:1	Pin d1 (mm)	Nominal Size d		Inner Width a (mm)	Inner Length c (mm)	Bow Width e (mm)	Eye Outer d2 (mm)	Weight (kg)
			(mm)	(in)					
A085813	3.3	16	13	1/2”	21	51	33	33	0.4
A085816	5.0	19	16	5/8”	27	60	42	40	0.7
A085819	7.0	22	19	3/4”	31	71	49	48	1.2
A085822	9.5	25	22	7/8”	37	84	60	52	1.7
A085825	12.5	28	25	1”	43	95	68	60	2.5
A085828	15.0	32	28	1 1/8”	46	108	74	64	3.4
A085832	18.0	35	32	1 1/4”	52	119	83	72	4.8
A085835	21.0	38	35	1 3/8”	57	132	89	76	7
A085838	30.0	42	38	1 1/2”	60	146	98	84	8.8
A085845	40.0	50	45	1 3/4”	74	178	127	105	15

Split pin included

Copyright © 2023 The Crosby Group LLC All Rights Reserved

GUNNEBO Industries

Stainless Steel Shackle No 735 Dee shackle with safety bolt

Material: AISI 316
Finish: Highly polished
Design Factor: 6:1
Documentation: Test certificate and traceable 3.1 certificate supplied upon request.

CE

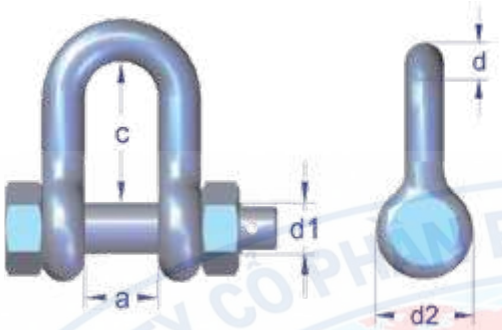

Stock No.	WLL (t) 6:1	Pin d1 (mm)	Nominal Size d (mm)	Inner Width a (mm)	Inner Length c (mm)	Eye Outer d2 (mm)	Weight (kg)
A073510	0.6	10	10	20	40	20	0.2
A073512	0.9	12	12	26	50	24	0.3
A073516	1.5	16	13	24	52	33	0.4
A073520	2.5	19	16	28	65	40	0.7
A073522	3.0	22	19	31	60	48	1.5
A073524	4.5	25	22	37	71	52	1.3
A073533	7.5	32	28	46	90	64	3.0
A073536	10.0	35	32	52	100	72	4.1

Split pin included

Stainless Steel Shackle No 755 Bow shackle with safety bolt

Material: AISI 316
Finish: Highly polished
Design Factor: 6:1
Documentation: Test certificate and traceable 3.1 certificate supplied upon request.

CE

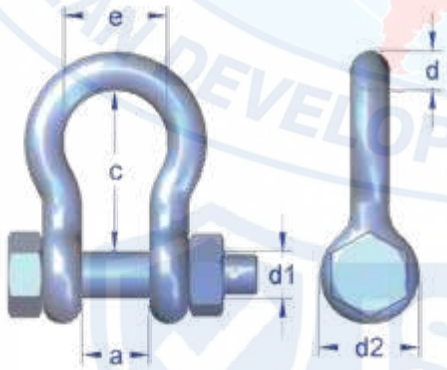

Stock No.	WLL (t) 6:1	Pin d1 (mm)	Nominal Size d (mm)	Inner Width a (mm)	Inner Length c (mm)	Bow Width e (mm)	Eye Outer d2 (mm)	Weight (kg)
7200685	0.6	10	10	20	40	27	20	0.2
A075512	0.9	12	12	25	47	37	26	0.3
A075516	1.5	16	13	25	47	33	34	0.4
A075520	2.5	20	16	28	60	42	40	0.8
A075522	3.0	22	19	31	71	51	48	1.3
A075524	4.5	25	22	37	84	58	52	1.7
A075533	7.5	32	28	46	108	74	64	3.4
A075536	10.0	35	32	52	119	83	72	5.2

Split pin included

Stainless Steel Shackle No 732 Dee shackle with countersunk pin

Material: AISI 316
Finish: Highly polished
Design Factor: 6:1
Documentation: Test certificate supplied upon request.

CE

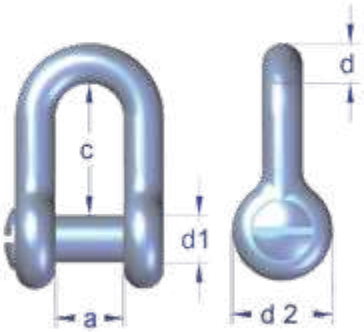

Stock No.	WLL (t) 6:1	Pin d1 (mm)	Nominal Size d (mm)	Inner Width a (mm)	Inner Length c (mm)	Eye Outer d2 (mm)	Weight (kg)
A073216	2.0	M16	13	24	52	34	0.3
A073220	3.0	M20	16	28	65	40	0.6
A073222	3.0	M22	19	31	60	48	1.4

Copyright © 2023 The Crosby Group LLC All Rights Reserved

Stainless Steel Shackle No 730 Dee shackle with screw pin

Material: AISI 316
Finish: Highly polished
Design Factor: 6:1
Documentation: Test certificate supplied upon request.

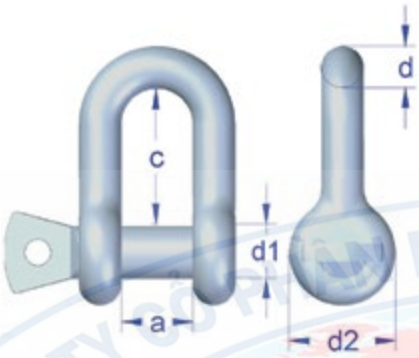

Stock No.	WLL (t) 6:1	Pin d1 (mm)	Nominal Size d (mm)	Inner Width a (mm)	Inner Length c (mm)	Eye Outer d2 (mm)	Weight (kg)
A073008S	0.4	M8	8	16	30	16	0.06
A073010S	0.6	M10	10	20	40	20	0.1
A073012S	0.9	M12	12	26	50	24	0.2
A073016S	1.5	M16	13	24	52	34	0.3
A073020S	2.5	M20	16	28	65	40	0.6
A073022S	3.0	M22	19	30	72	48	0.9

Stainless Steel Shackle No 750 Bow shackle with screw pin

Material: AISI 316
Finish: Highly polished
Design Factor: 6:1
Documentation: Test certificate supplied upon request.

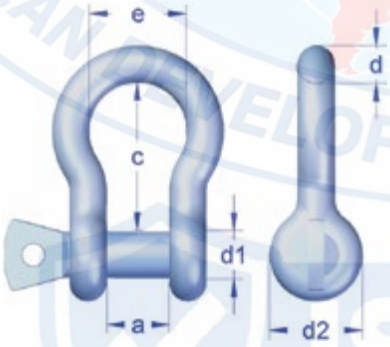

Stock No.	WLL (t) 6:1	Pin d1 (mm)	Nominal Size d (mm)	Inner Width a (mm)	Inner Length c (mm)	Bow Width e (mm)	Eye Outer d2 (mm)	Weight (kg)
A075008S	0.4	M8	8	16	30	23	16	0.07
A075010S	0.6	M10	10	20	40	27	20	0.11
A075012S	0.9	M12	12	25	47	37	26	0.25
A075016S	1.5	M16	13	25	47	34	33	0.33
A075020S	2.5	M20	16	28	60	42	40	0.96
A075022S	3.0	M22	19	31	71	51	48	1.0

Shackle SA Grade 8

Material: Alloy steel
Finish: Painted yellow
Design Factor: 4:1

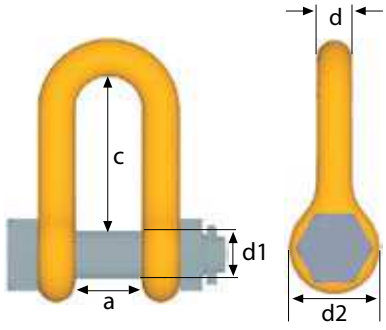

Stock No.	Code	WLL (t) 4:1	For Chain Size (mm)	Pin d1 (mm)	Nominal Size d (mm)	Inner Width a (mm)	Inner Length c (mm)	Eye Outer d2 (mm)	Weight (kg)
Z100706	SA-7/8-8	2.0	7, 8	M10	8	15	30	20	0.1
Z298728	SA-10-8	3.2	10	M16	13	24	52	34	0.4
Z292528	SA-13-8	5.4	13	M20	16	28	65	40	0.7
Z293024	SA-16-8	8.2	16	M22	18	30	72	46	1
Z299622	SA-19-8	11.5	19	M27	22	36	86	52	1.7
Z294122	SA-22-8	15.5	22	M30	25	40	94	60	2.5
Z304328	SA-26-8	21.7	26	M38	32	48	116	76	5.2

Split pin included

Copyright © 2023 The Crosby Group LLC All Rights Reserved

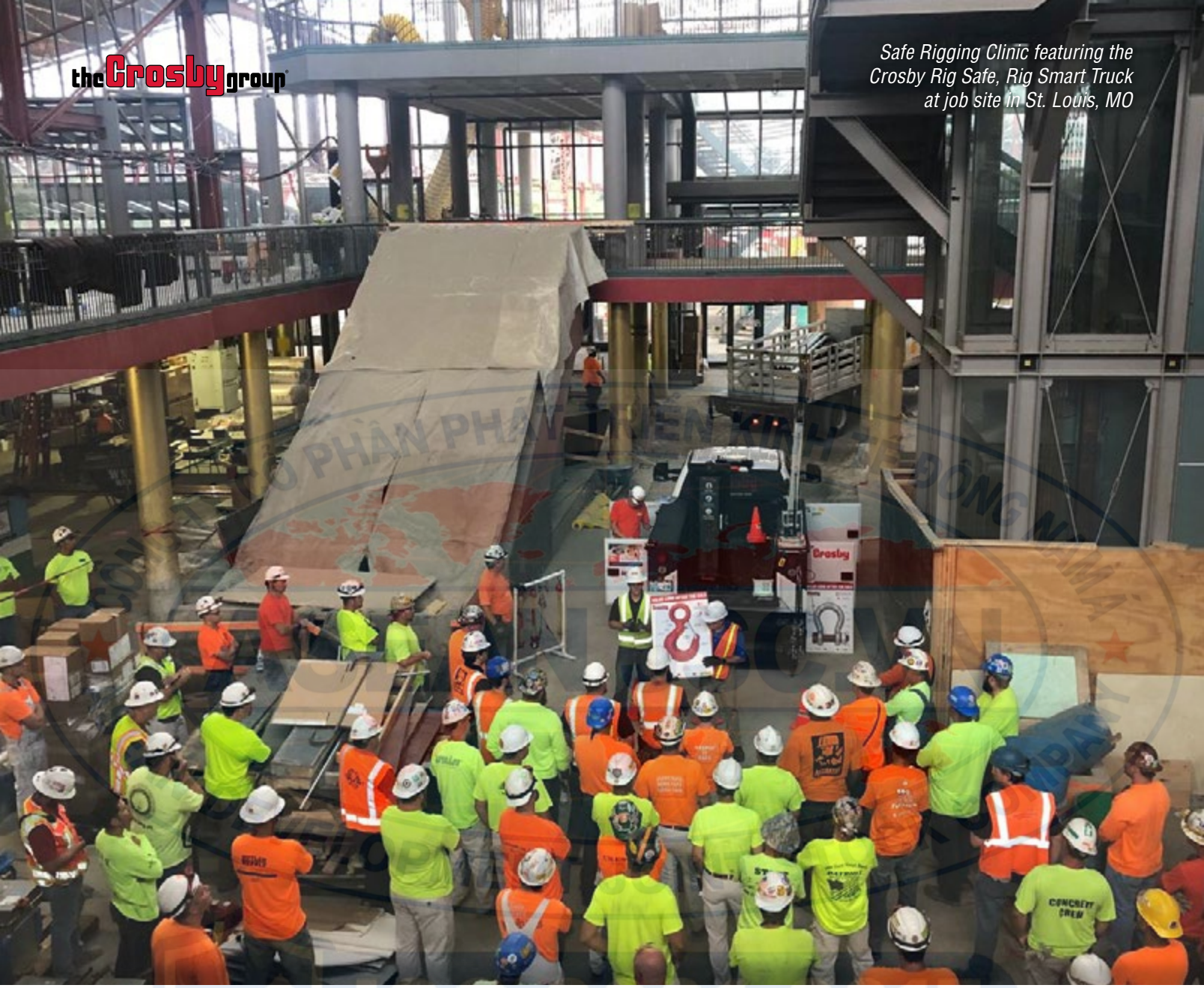

Safe Rigging Clinic featuring the Crosby Rig Safe, Rig Smart Truck at job site in St. Louis, MO

ENSURE YOUR TEAM IS KNOWLEDGEABLE & SAFE

The Crosby Group offers the most comprehensive on-site and online training on the installation, use, inspection and maintenance of rigging hardware.

ON-SITE COURSES (INSTRUCTOR-LED)

- ASME/OSHA for general industry and construction
- Land Based Energy (Oil & Gas)
- Offshore Energy (Oil & Gas)
- Certificate upon successful completion

ON-SITE SAFE RIGGING CLINICS (TRUCK/TRAILER)

- Insights into key safe, effective and efficient rigging best practices
- 30–45 minute toolbox talk
- Product proof testing
- Product application and live load demonstrations

ONLINE SAFE RIGGING COURSE (SELF-PACED)

- Rigging fundamentals based on topics covered in the *User's Guide for Lifting* rigging card
- Video explanations and quizzes
- Certificate upon successful completion

Learn more about our training opportunities, or request an on-site safe rigging clinic at your job site, at **thecrosbygroup.com/training**.

LOAD MONITORING

Advanced technology products and software solutions that improve communication and overall safety awareness.

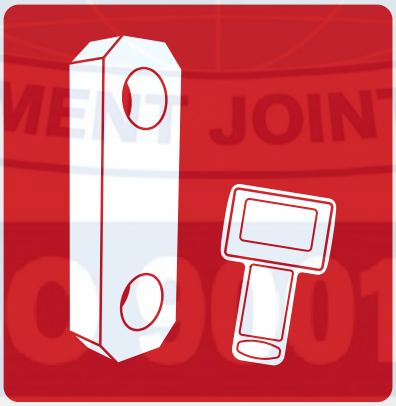

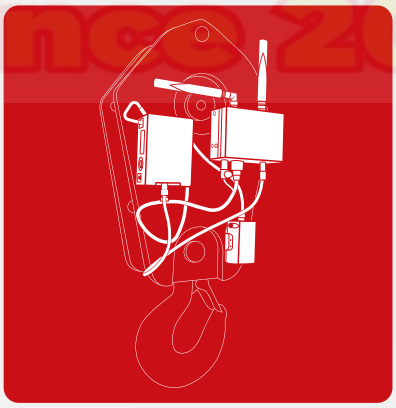

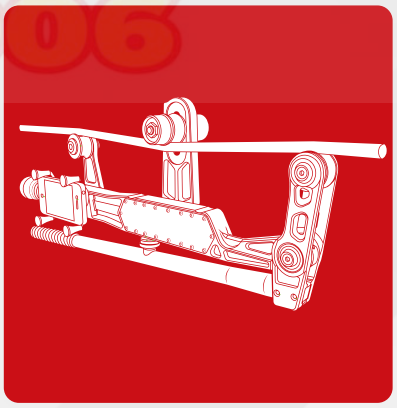

ASEAN JSC.VN
ASEAN DEVELOPMENT JOINT STOCK COMPANY
ISO 9001:2015
Since 2006

thecrosbygroup

thecrosbygroup.com

LoadConnect

Crosby | SP

Improve safety and efficiency on your work sites.

Cloud-based solution to monitor projects from anywhere in the world.

Stay connected on any device with an internet connection.

thecrosbygroup.com/loadconnect

ASEAN JSC.VN
CÔNG TY CỔ PHẦN PHÁT TRIỂN KHU VỰC ĐÔNG NAM Á
ASEAN DEVELOPMENT JOINT STOCK COMPANY
ISO 9001:2015
Since 2006

Radiolink Plus

- Capable of weighing and dynamic load monitoring in capacities from 1t to 500t.
- Constructed of lightweight, aerospace grade aluminum.
- Environmentally sealed to IP67 or NEMA6.
- Proprietary 2.4 GHz wireless.
- Update rate of 3Hz and can be easily configured to run at industry-leading speeds of up to 200Hz.
- Remote on/off from handheld display or software.
- ATEX Zones 0, 1 & 2 available.
- Design validated by FEA.
- 2-year warranty.
- DNV-GL Type Approval.
- Complies with ASME B30.26.
- Bluetooth option is available and is supplied with a free HHP app for iOS and Android.

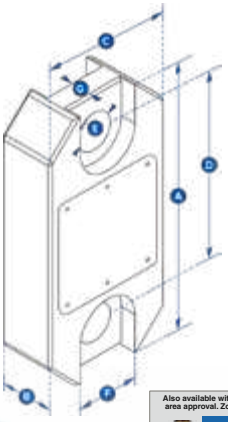

Part Number SP		RLP1T	RLP2T5	RLP6T5	RLP12T	RLP25T	RLP35T	RLP55T	RLP75T	RLP100T	RLP150T	RLP200T	RLP250T	RLP300T	RLP500T
Crosby		2789084	2789089	2789094	2789082	2789088	2789091	2789093	2789095	2789081	2789083	2789085	2789087	2789090	2789092
Capacity	(te)	1,000 kg	2.5	6.5	12	25	35	55	75	100	150	200	250	300	500
	(lb)	2,200	5,500	14,300	26,000	55,000	77,000	120,000	165,000	220,000	330,000	440,000	550,000	660,000	1,100,000
Resolution	(te)	0.5 kg	0.001	0.001	0.002	0.005	0.005	0.01	0.01	0.05	0.05	0.1	0.1	0.1	0.1
	(lb)	1	2	2	5	10	10	20	20	100	100	200	200	200	200
Units	(metric)	kg	metric tons												
	(imperial)	pounds													
Weight	(kg)	1.5	1.5	2.4	3.7	5	8.6	13	16	34	46	82	82	118	193
	(lb)	3.3	3.3	5.3	8.2	11	19	28.7	35.3	75	101.4	180.8	180.8	260	425.5
Design Factor		12:1	7:1	7:1	7:1	5:1	5:1	5:1	5:1	5:1	4:1	5:1	4:1	5:1	5:1
Battery Type		Handheld 2 x AA / Loadcell 4 x AA													
Battery Life		Handheld - 40 hours / Loadcell 1200 hours continuous (Loadcell 500 hours if Bluetooth)													
Display Type		240 x 128 pixel Multi-line dot matrix with backlight													
Operating Temp.		-10°C to +50°C / 14°F to 122°F													
Accuracy		±0.1% of full scale													
Frequency		2.4 GHz													
System Range (max)		1000 meters / 3280 feet (100 meters / 328 feet if Bluetooth) (500 meters / 1640 feet if ATEX/IECEx)													
Data Rate		3 Hz - up to 200 Hz can be ordered for dynamic load monitoring applications													
Protection		IP67 / NEMA6													
Dimension A	(mm)	204	204	249	305	340	393	424	470	608	670	700	700	806	930
	(in)	8.03	8.03	9.80	12.01	13.39	15.47	16.69	18.50	23.94	26.38	27.56	27.56	31.73	36.61
Dimension B	(mm)	43	43	43	47	60	75	75	75	99	99	144	144	150	150
	(in)	1.69	1.69	1.69	1.85	2.36	2.95	2.95	2.95	3.90	3.90	5.67	5.67	5.91	5.91
Dimension C	(mm)	104	104	113	113	115	126	180	202	255	303	350	350	426	570
	(in)	4.09	4.09	4.45	4.45	4.53	4.96	7.09	7.95	10.04	11.93	13.78	13.78	16.77	22.44
Dimension D	(mm)	146	146	165	193	215	225	230	260	320	360	350	350	350	450
	(in)	5.75	5.75	6.50	7.60	8.46	8.86	9.06	10.24	12.60	14.17	13.78	13.78	13.78	17.72
Dimension ØE	(mm)	24.5	24.5	38	47.5	55	60	76	76	109	109	145	145	160	200
	(in)	0.96	0.96	1.50	1.87	2.17	2.36	2.99	2.99	4.29	4.29	5.71	5.71	6.30	7.87
Dimension F	(mm)	48	48	65	NOT RELEVANT IN THIS CAPACITY										
	(in)	1.89	1.89	2.60											
Dimension G	(mm)	19	19	32											
	(in)	0.75	0.75	1.26											
Crosby Shackle		G2130						G2140							G2160
Loading Pin Ø	(mm)	19	19	25	35	51	57	57	70	83	95	121	127	152	180
	(in)	3/4	3/4	1	1 3/8	2	2 1/4	2 1/4	2 3/4	3 1/4	3 3/4	4 3/4	5	6	7 1/8

Copyright © 2023 The Crosby Group LLC All Rights Reserved

Wireless Loadshackle

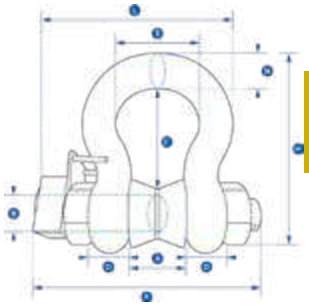

- Capacities of 3.25t to 500t, as well as being obtainable up to 3000t.
- Wireless range of 1000m or 3280ft.
- Every Loadshackle is proof tested.
- Electronics housed in hard anodized enclosure.
- Environmentally sealed to IP67 or NEMA6.
- Battery life of 1200 hrs from 4 x AA batteries.
- Internal antenna.
- Remote on/off from handheld display or software.
- Supplied with a load-centering bobbin.
- 2-year warranty.
- Complies with ASME B30.26.
- Design validated by FEA.
- ATEX Zones 0, 1 & 2 available.
- Bluetooth option is available and is supplied with a free HHP App for iOS and Android.

Part Numbers		WLS3.25T	WLS6.5T	WLS12T	WLS25T	WLS55T	WLS85T	WLS120T	WLS200T	WLS300T	WLS400T
Crosby		2789186	2789200	2789183	2789185	2789199	2789201	2789172	2789184	2789188	2789189
Capacity	(te)	3.25	6.5	12	25	55	85	120	200	300	400
	(lb)	7,150	14,300	26,400	55,000	120,000	185,000	260,000	440,000	660,000	880,000
Resolution	(te)	0.005	0.005	0.01	0.02	0.05	0.05	0.1	0.2	0.5	0.5
	(lb)	10	10	20	50	100	100	200	200	1000	1000
Units	(metric)	metric tons									
	(imperial)	pounds									
Weight	(kg)	2.8	3.2	8	18	25	85	125	260	405	662
	(lb)	6.16	7	17.6	40	55	187	276	573	893	1459
Design Factor		5:1 when used with load bobbin									
Battery Type		Loadcell 4 x AA Alkaline									
Battery Life		Loadcell 1200 hours continuous (500 hours if Bluetooth)									
Operating Temp.		-10°C to +50°C / 14°F to 122°F									
Accuracy		±1% full scale									
Frequency		2.4 GHz									
System Range (max)		1000 meters / 3280 feet (100 meters / 328 feet if Bluetooth) (500 meters / 1640 feet if ATEX/IECEx)									
Data Rate		3 updates per second									
Protection		IP67 / NEMA6									
Dimension A	(mm)	26.9	36.6	51.5	73	82.5	127	144	180	205	230
	(in)	1.06	1.44	2.03	2.87	3.25	5.00	5.66	7.09	8.07	9.06
Dimension ØB	(mm)	19.1	25.4	35.1	51	57	83	95	125	150	175
	(in)	0.75	1.00	1.38	2.01	2.24	3.26	3.74	4.92	5.91	6.89
Dimension C	(mm)	56.9	79.7	113	170	189.5	317	364	432.2	505	547.7
	(in)	2.24	3.14	4.45	6.69	7.46	12.48	14.33	17.02	19.88	21.56
Dimension D	(mm)	14.46	20.6	29.5	44.5	51	80	89	110	120	160
	(in)	0.57	0.81	1.16	1.75	2.01	3.14	3.50	4.33	4.72	6.30
Dimension E	(mm)	42.9	58	82.5	127	146	190	238	280	305	325
	(in)	1.69	2.28	3.25	5.00	5.75	7.48	9.37	11.02	12.01	12.80
Dimension H	(mm)	106	148	210	313	348	539	624	769	904	1006.5
	(in)	4.17	5.83	8.27	12.32	13.70	21.22	24.56	30.28	35.59	39.63
Dimension L	(mm)	135	156.5	201	275	306	393	445	529.7	586.7	667.2
	(in)	5.31	6.16	7.91	10.83	12.05	15.47	17.51	20.85	23.10	26.27
Dimension N	(mm)	17.5	24.6	35.1	57	61	85	95	120	140	160
	(in)	0.69	0.97	1.38	2.24	2.40	3.34	3.74	4.72	5.51	6.30
Dimension P	(mm)	150	173	222	290	317	448	488	600	657	765
	(in)	5.91	6.81	8.74	11.42	12.48	17.63	19.21	23.62	25.87	30.12
Crosby Shackle		G2130				G2140	S2135				

Copyright © 2023 The Crosby Group LLC All Rights Reserved

BlueLink

Designed to replace outdated mechanical products still in the field, this 6500kg (14,300lb) dynamometer, the BlueLink, is the latest Crosby Straightpoint product to feature proprietary Bluetooth wireless technology.

The Bluetooth signal effortlessly connects to any iOS or Android smartphone that has our free HHP app installed, providing the operator with a wireless range of up to 100m or 328ft. This allows them to stand in a safe position from the load with no requirement to read a load on the loadcell itself. The app also allows the operator to log data versus time, or on events such as over- or under-load. An adjustable alarm will alert the operator on their smartphone if any overload is occurring.

Rigged using industry standard Crosby G2130 Shackles, the BlueLink has been designed to minimize headroom (156mm or 6.14in from eye to eye). With a design factor of over 500%, its compact lightweight design does not sacrifice on strength.

Constructed from high-quality aerospace grade aluminum, which is then hard-anodized, BlueLink features an advanced internal design structure. This design provides the product with an unrivaled strength to weight ratio. The use of a separate internal sealed enclosure administers the loadcell's electronic components with IP67 or NEMA6 environmental protection, even with the battery cover plate missing. All these features makes it an industry-leading compact dynamometer, even more suitable for use in the harshest industrial or leisure environments.

The BlueLink is powered by four standard AA alkaline batteries that provide in excess of 500 hours transmission time. Its internal antenna ensures safe transmissions of loads to an accuracy of ±0.2% FS.

Part Numbers SP	BLD6T5
Crosby	2789218
Capacity	6.5 t
	14,300 lb
Resolution	0.001 t
	2 lb
Weight	1.5 kg
	3.3 lb
Design Factor	5:1
Battery Type	4 x AA alkaline batteries
Battery Life	500 hours
Operating Temperature	-10°C to +50°C / 14°F to 122°F
Accuracy	±0.2% of full scale
Range	100 meters / 328 feet
Data Rate	3 Hz
Protection	IP67 / NEMA6
Dimension A	224 mm
	8.82 in
Dimension B	44 mm
	1.73 in
Dimension C	113.6 mm
	4.47 in
Dimension D	156 mm
	6.14 in
Dimension ØE	27.5 mm
	1.08 in
Dimension F	33 mm
	1.3 in

Copyright © 2023 The Crosby Group LLC All Rights Reserved

LoadSafe

- Wireless range of 1000m or 3280ft.
- High grade 17-4PH stainless steel, providing excellent strength and corrosion resistance.
- Proprietary 2.4 GHz wireless.
- Accuracy of ±0.1% FS.
- Environmentally sealed to IP67 or NEMA6.
- Stocked capacities up to 1000t.
- Industry leading wireless range up to 1000m or 3280ft.
- Internal antenna.
- ATEX & IECEx version for hazardous area zones 0, 1 & 2 available.
- Battery life of 1200 hrs.
- Compact size.
- Remote on/off from handheld display or software.
- Design validated by FEA.
- Bluetooth option is available and is supplied with a free HHP App for iOS and Android.

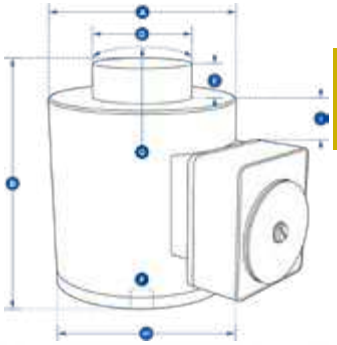

Part Numbers SP		WNI5TC	WNI10TC	WNI25TC	WNI50TC	WNI100TC	WNI150TC	WNI300TC	WNI500TC	WNI1000TC
Crosby		2789197	2789191	2789193	2789196	2789190	2789192	2789194	2789195	2789138
Capacity	(te)	5	10	25	50	100	150	300	500	1000
	(lb)	11,000	22,000	55,000	110,000	220,000	330,000	660,000	1,100,000	2,200,000
Resolution	(te)	0.001	0.002	0.005	0.01	0.05	0.05	0.1	0.2	0.5
	(lb)	2	5	10	20	100	100	200	500	1000
Units	(metric)	metric tons								
	(imperial)	pounds								
Weight	(kg)	6.2	6.2	6.2	6.2	15.5	15.5	65	65	172
	(lb)	13.64	13.64	13.64	13.64	34	34	143	143	379
Design Factor		3:1								
Battery Type		Loadcell 4 x AA Alkaline								
Battery Life		Loadcell 1200 hours continuous (500 hours if Bluetooth)								
Operating Temp.		-10°C to +50°C / 14°F to 122°F								
Accuracy		±0.1% of full scale								
Frequency		2.4 GHz								
System Range (max)		1000 meters / 3280 feet (100 meters / 328 feet if Bluetooth) (500 meters / 1640 feet if ATEX/IECEx)								
Data Rate		3 Hz (configurable to 200Hz)								
Protection		IP67 / NEMA6								
Dimension ØA	(mm)	100	100	100	100	152	152	185	185	362
	(in)	3.94	3.94	3.94	3.94	5.98	5.98	7.28	7.28	14.25
Dimension B	(mm)	127	127	127	127	184	184	300	300	310
	(in)	5.00	5.00	5.00	5.00	7.24	7.24	11.81	11.81	12.20
Dimension ØD	(mm)	59	59	59	59	80	80	155	155	270
	(in)	2.32	2.32	2.32	2.32	3.15	3.15	6.10	6.10	10.63
Dimension E	(mm)	16	16	16	16	26	26	27.5	27.5	40
	(in)	0.63	0.63	0.63	0.51	1.02	1.02	1.08	1.08	1.57
Dimension F	(mm)	M18 x 2.5	M18 x 2.5	M18 x 2.5	M20 x 2.5	M20 x 2.5	M20 x 2.5	M20 x 2.5	M20 x 2.5	M30 x 3.5
	(mm)	M18 x 2.5	M18 x 2.5	M18 x 2.5	M20 x 2.5	M20 x 2.5	M20 x 2.5	M20 x 2.5	M20 x 2.5	M30 x 3.5
Dimension G	(mm)	152	152	152	152	432	432	432	432	950
	(in)	5.98	5.98	5.98	5.98	17.01	17.01	17.01	17.01	37.40
Dimension H	(mm)	158	158	158	158	208	208	241	241	422
	(in)	6.22	6.22	6.22	6.22	8.19	8.19	9.49	9.49	16.61
Dimension I	(mm)	6	6	6	6	7	7	21.5	21.5	102
Loadcell top to SA700 top	(in)	0.23	0.23	0.23	0.23	0.27	0.27	0.27	0.54	4.02

Copyright © 2023 The Crosby Group LLC All Rights Reserved

Clamp On Line Tensionmeter (COLT)

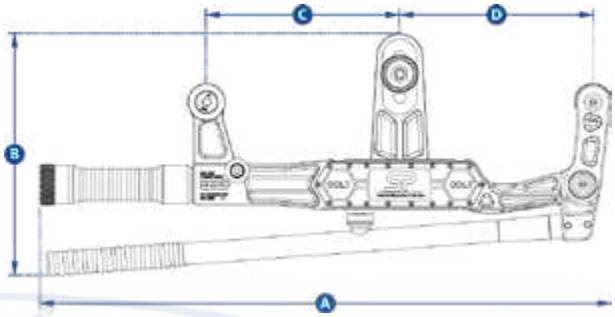

- Lightweight wire rope tension meter for fast and accurate measurement of tensions up to 5,000kg or 11,000lb and up to 25mm or 1in diameter.
- Constructed from aerospace grade aluminum.
- Unlimited wire rope calibration database via Android or iOS app.
- Built-in magnetic smart device holder for on board display.
- Main swivel joints fitted with high-quality bearings.
- Lever ratio of 5.3:1 allows effortless, safe, clamping onto pre-tensioned wire ropes.
- Wireless Bluetooth 4.2 enabling operator to stand a safe distance away, up to 100m or 328ft.
- Quick intuitive adjustable center sheave makes changing wire rope sizes fast and easy.
- No easily broken external antenna.
- High waterproof resistant design IP67 or NEMA6 for all weather use.
- Long battery life of 1000 hrs operational time.
- As the library of wire rope diameters and constructions is increased each app user will benefit when they update free of charge.

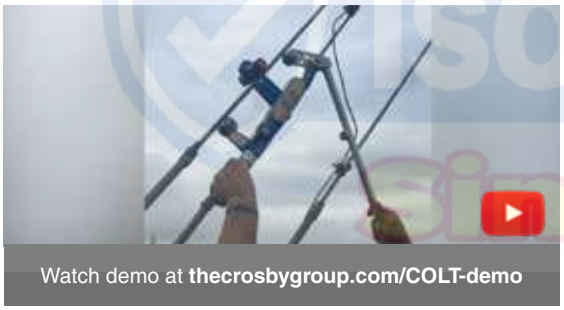

Part Numbers SP	COLT5T
Crosby	2789000
Max Load	5,000 kg
	11,000 lb
Resolution	10 kg
	20 lb
Units	kilograms, pounds, metric tons and kilonewtons
Min Wire Rope Ø	Ø5 mm
	Ø3/16”
Max Wire Rope Ø	Ø25 mm
	Ø1”
Max Line Reduction	5 mm with a Ø10 mm wire rope
	7/32“ with a Ø3/8” wire rope
Wire Rope Database	Infinite via Android or iOS app
Weight	3.5 kg
	7.7 lb
Battery Type	2 x ‘C’ cell batteries
Battery Life	1000 hours Bluetooth transmission time
Operating Temp.	-25°C to +70°C / -13°F to +158°F
Protection	IP67 / NEMA6
Accuracy	±3% of full scale if wire rope Ø and construction known
Communication	Bluetooth 4.2
Dimension A	589 mm
	23.2”
Dimension B	254 mm
	10”
Dimension C	200 mm
	7.9”
Dimension D	200 mm
	7.9”

Specifications assume COLT used on a wire rope with a fixed and flexible end.

Optional for purchase:

Calibration verification tool (CVT)

SP - SA507 Crosby 2789225

In order to ensure the measurements of the COLT are as accurate as possible, Crosby SP supplies a calibration verification rod.

Copyright © 2023 The Crosby Group LLC All Rights Reserved

Bolt On Line Tensionmeter (BOLT)

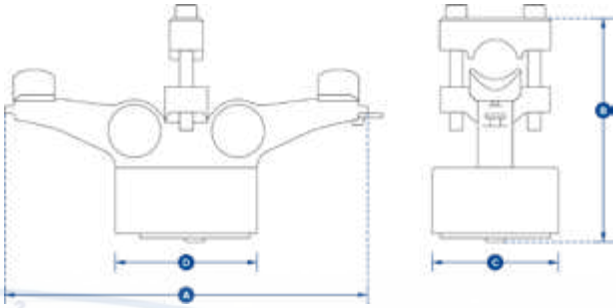

- Constructed from aerospace-grade aluminum.
- Designed to be mounted in a permanent position on wire rope or cable to accurately monitor measurements of tension up to 10,000 kg or 20,000lb and up to 32mm or 1.25in diameter.
- Proprietary 2.4 GHz wireless.
- Leading wireless range of 1000m/3280ft when connected to SW-HHP, enabling you to read up to four loadcells simultaneously.
- Unlimited range when connected to BaseStation to monitor remotely.
- Will provide reduced site visits, improve decision making and safely monitor line tensions from any distance from anywhere in the world.
- Unrivaled battery life of 1200 hrs.
- Multiple drop tested from 3 meters or 10 feet.
- Internal antenna.
- Remote on/off from handheld display or software.

Part Numbers SP	BOLT10T
Crosby	2789573
Max Load	10 t
	22000 lb
Resolution	0.01 t
	20 lb
Units	kilograms, pounds, metric tons and kilonewtons
Min Wire Rope Ø	16 mm
	5/8”
Max Wire Rope Ø	32 mm
	1 1/4”
Weight	2.1 kg
	4.6 lb
Battery Type	4 x ’AA’ cell batteries
Battery Life	1200 hours
Operating Temp.	-10°C to +50°C / 14°F to +122°F
Protection	IP67 / NEMA6
Accuracy	Typically 3-5%
Communication	2.4 GHz
Dimension A	259 mm
	10.20”
Dimension B	159.1 mm
	6.26”
Dimension C	89 mm
	3.50”

CROSBY STRAIGHTPOINT TRAINING VIDEOS

- How to pair a loadcell (and multiple loadcells) to a handheld
- How to know the correct number of compression cells required
- How to use the backlight function on a handheld
- How to get accurate loadcell readings at various distances
- Snatch block & loadcell demonstration
- COLT calibration verification tool installation demo
- Plus many more...

Watch now at **thecrosbygroup.com/SPvideos**

Copyright © 2023 The Crosby Group LLC All Rights Reserved

CableSafe

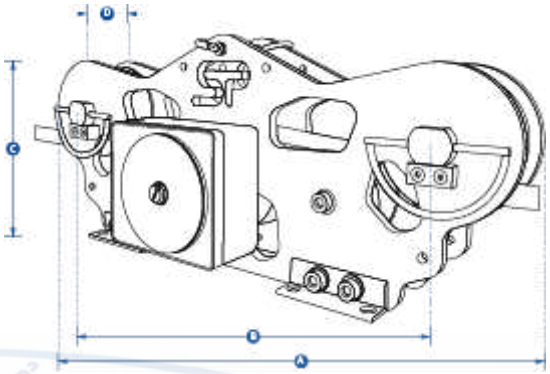

- Simple to use and set up.
- Remote monitoring using smart phone via Bluetooth.
- Rapid tension force measurement - Up to 600m or 1968ft per minute.
- Able to be used in all weather and air quality conditions.
- Providing up to 500 hours battery life.
- Easy to install and replace batteries (4 x AA standard alkaline).
- Fully constructed from aerospace-grade aluminum with anodized finish.
- Five-wheel design, improving accuracy.
- Blue anodized side plates.
- Linchpins are fitted to the top sheave pins, making wire rope installation quick and simple.
- Maintenance free heavy duty bearings.
- Compatible with a wide range of synthetic rope/electrical cable diameters – 4-30mm or 5/32 in – 1 3/16 in.
- IP67 ingress protection or NEMA6 – heavy protection against dust and rain.
- Design validated by FEA.

Part Numbers SP	CableSafe	CableSafe-WD
Crosby	2789219	2789399
Capacity	10 t	10 t
	22000 lb	22000 lb
Resolution	0.01 t	0.01 t
	20 lb	20 lb
Synthetic Rope / Electrical Cable Ø	4-19 mm	9.5-30 mm
	5/32”- 3/4”	3/8”- 1 3/16”
Weight	4.5 kg	8 kg
	10 lb	17.6 lb
Battery Type	4 x AA Alkaline	
Battery Life	500 hours	
Operating Temp.	-10°C to +50°C / 14°F to 122°F	
Accuracy	±2% of full scale	
Range	Bluetooth 100 meters / 328 feet	
Protection	IP67 / NEMA6	
Maximum Speed	600 m per minute	
	1,968 ft per minute	
Dimension A	422 mm	422 mm
	16.61”	16.61”
Dimension B	328 mm	328 mm
	12.91”	12.91”
Dimension C	152 mm	152 mm
	5.98”	5.98”
Dimension D	36.5 mm	50.5 mm
	1.43”	2”

In addition to the TIMH range, the CableSafe® is the continued evolution of Crosby Straightpoint’s running line tensiometers. When used in the field, it will allow the user to monitor tension with exceedingly high levels of accuracy, which ensures rope/cables do not become overstretched or break.

When using a capstan winch to unwind electrical cable from a reel/spool, you will be able to integrate the CableSafe within this set-up to ensure that it is being pulled at a safe tension level. This helps the line maintain its transmissions capability, prevent it becoming a fire hazard risk, and it also stops the need of furthering work in order to remove and replace it. The contractor is gifted with decreased liability, dramatically increasing peace of mind.

Using CableSafe on cable pulls reduces liabilities on cable installations, making it ideal for the following applications:

- Measure tension when pulling electrical cables – protect against fractures or elongation
- Measuring tension on synthetic rope when erecting delicate structures using gin poles and capstan winch

Another example of best use is during the installation of cell phone towers or similar delicate structures. The product helps ensure structure-to-ground ropes which are connected to a gin pole and pulley system. Avoid the unknown through accurate monitoring, especially when risks are high.

Copyright © 2023 The Crosby Group LLC All Rights Reserved

Running Line Dynamometer

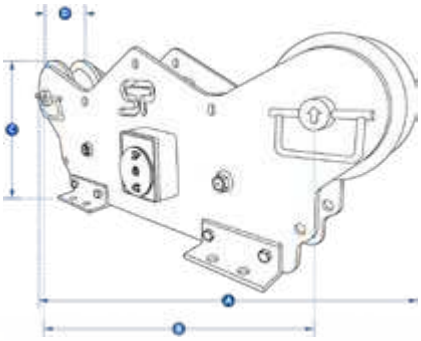

The TIMH range is a wireless running line tensiometer or RLTM built with dockside, marine, offshore, towage, and salvage applications in mind.

- Fully constructed from corrosion-resistant stainless steel.
- Large range of capacities to 150t and wire rope diameters up to 89mm or 3½ in.
- Measures tension force at speeds up to 20m/min or 65ft/min.
- Five-wheel design, improving accuracy.
- Industry leading battery life of 1200 hrs (wireless).
- Maintenance-free heavy duty bushes.
- Options for lineout and speed available.
- Software available to data log and monitor or analog outputs.
- Cabled system or wireless bluetooth option are available and is supplied with a free HHP app for iOS and Android.
- IP67 or NEMA6 Loadpin.
- Design validated by FEA.

Part Numbers SP		MTIMH10TRD	TIMH10TRD	TIMH25TRD	TIMH56TRD	TIMH80TRD	TIMH150TRD
Crosby		2789054	2789136	2789139	2789144	2789146	2789270
Capacity	(te)	10	10	25	56	80	150
	(lb)	22,000	22,000	55,000	123,200	176,000	330,000
Resolution	(te)	0.01	0.01	0.02	0.05	0.1	0.2
	(lb)	20	20	50	100	200	500
Wire Rope Ø	(mm)	4-19	13-19	16-26	28-38	40-52	52-89
	(in)	5/32” - 3/4”	1/2” - 3/4”	5/8” - 1”	1 1/8” - 1 1/2”	1 5/8” - 2”	2” - 3 1/2”
Weight	(kg)	9	90	86	81	76	230
	(lb)	20	198	190	179	168	506
Battery Type		4 x AA Alkaline					
Battery Life		Wireless version 1200 hours continuous					
Operating Temp.		-10°C to +50°C / 14°F to 122°F					
Accuracy		±2% of full scale					
Frequency		2.4 GHz					
System Range (max)		700 meters / 2,300 feet					
Data Rate		3 updates per second					
Protection		IP67 / NEMA6					
Maximum Speed		50 m per minute	20 m per minute				
		164 ft per minute	65 ft per minute				
Line out and speed		via SW-MWLC software					
Dimension A	(mm)	422	865	865	865	865	1250
	(in)	16.62	34.05	34.05	34.05	34.05	49.21
Dimension B	(mm)	328	674	674	674	674	1050
	(in)	12.9	26.53	26.53	26.53	26.53	41.33
Dimension C	(mm)	152	324	324	324	324	416
	(in)	5.98	12.75	12.75	12.75	12.75	16.37
Dimension D	(mm)	36	111	111	111	111	153
	(in)	1.4	4.37	4.37	4.37	4.37	6.02

Copyright © 2023 The Crosby Group LLC All Rights Reserved

Towcell®

- Unique design fits any standard 2” tow hitch.
- Unmatched battery life of 500 hrs.
- Waterproof IP67 or NEMA6.
- Internal antenna.
- Compact size and lightweight.
- Proprietary 2.4 GHz wireless communication.
- Design validated by FEA.
- Bluetooth enabled and is supplied with a free HHP app for iOS and Android.

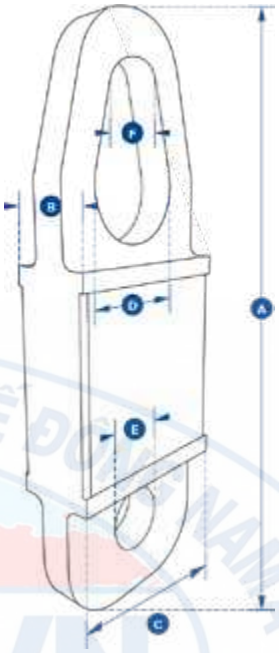

The Crosby Straighpoint Towcell® is a 25kN wireless loadcell, specifically engineered for the emergency services, salvage, and 4x4 industries. The Towcell allows for increased safety and the avoidance of costly overloads by providing real-time monitoring of tensile towing forces during recovery, clearance and salvage efforts.

The Towcell is rugged, lightweight, compact, and can be installed, with ease, onto any tow bar, whether it’s a standard 52mm or 2in ball or pin assembly and is ready to use in seconds.

Modeled after Crosby SP’s bestselling Radiolink Plus, the Towcell is constructed of high-quality aircraft grade aluminum. It features an advanced internal design structure, providing the product with an unrivaled strength to weight ratio. This optimal balance allows for the use of a separate internally sealed enclosure. This administers the internal electronic components with an IP67 or NEMA6 waterproof environmental protection, even with the battery cover plate missing.

Towcell utilizes an unbreakable internal antenna and boasts an unmatched battery life.

Part Numbers SP	Towcell - Bluetooth
Crosby	2789271
Capacity	25 kN
Resolution	0.01 kN
Weight	1.4 kg
	3 lb
Design Factor	5:1
Battery Type	4 x AA Alkaline
Battery Life	500 hours continuous
Operating Temp.	-10°C to +50°C / 14°F to 122°F
Accuracy	±0.1% of full scale
Frequency	2.4 GHz
System Range (max)	100 meters / 328 feet
Data Rate	50 Hz
Protection	IP67 / NEMA6
Dimension A	300 mm
	11.81”
Dimension B	43 mm
	1.70”
Dimension C	104 mm
	4.09”
Dimension ØD	51 mm
	2.00”
Dimension ØE	27 mm
	1.06”
Dimension ØF	31 mm
	1.22”

Only sold in Europe. Does not meet US towing requirements.

Copyright © 2023 The Crosby Group LLC All Rights Reserved

ChainSafe

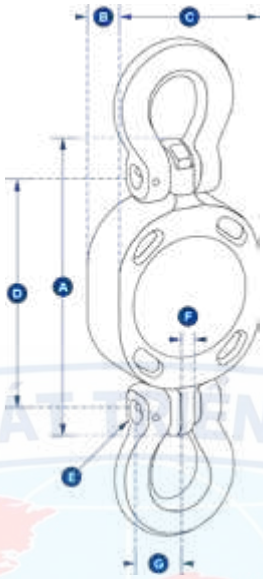

Part Numbers SP	ChainSafe
Crosby	2789536
Capacity	4 t
	88000 lb
Resolution	0.002 t
	4 lb
Weight	2.5 kg
	5.5 lb
Design Factor	4:1
Battery Type	Lithium Thionyl Chloride (non replaceable)
Battery Life	5 years based on 3 hours use per day
Operating Temp.	-10°C to +50°C / 14°F to 122°F
Accuracy	+/- 0.2% of full scale
Range	100 meters / 328 feet
Data Range	1 Hz
Protection	IP67 / NEMA6
Dimension A	164 mm
	6.46”
Dimension B	35 mm
	1.38”
Dimension C	85 mm
	3.35”
Dimension D	132 mm
	5.20”
Dimension E	13.2 mm
	0.52”
Dimension F	11 mm
	0.43”
Dimension G	28 mm
	1.10”
Recommended Fittings	3/8” (10mm) G100 Chain fittings

- Designed to work with 10mm chain.
- Unmatched weight-to-strength ratio.
- Update rate of 1Hz and the Bluetooth signal effortlessly connects to any iOS or Android smartphone that has our free HHP App that will alert the operator on their smartphone if any overload is occurring.
- Bluetooth wireless range of 100m/328ft.
- No battery change required.
- Battery life 5 yrs based on 3 hrs use per day.
- Environmentally sealed to IP67/NEMA6.
- Internal antenna.
- Conforms to EN1677:2008.
- Fatigue tested to 30,000 cycles to 1.5x WLL.

ChainSafe is designed to be fitted with an array of The Crosby Group’s chain fittings, and is an approved wireless tension loadcell capable of load monitoring of capacities up to 4t.

chain fittings are not included

Copyright © 2023 The Crosby Group LLC All Rights Reserved

INSIGHT Software

INSIGHT Visualisation

INSIGHT Center of Gravity

INSIGHT Display

INSIGHT Chart

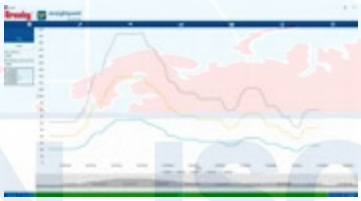

INSIGHT software, supplied with an SW-D USB wireless dongle, allows connection of up to 126 Crosby Straightpoint wireless loadcells simultaneously onto any Windows tablet or laptop.

Insight has four main features:

- **Multi-channel display and data logging mode**
  View and log load data from connected loadcells plus totals loads live on screen and directly into a .csv file for later analysis at speeds of up to 200Hz.
- **Visualization mode**
  For complicated lifts import a photo of the lift and drag and drop loadcell displays – make the screen look like the lift.
- **Center of gravity mode**
  Connect to Crosby SP's range of wireless compression loadcells and use this feature to weigh and calculate the center of gravity of large items and structures.
- **Proof load testing**
  Real time graphing of load test and auto generated test certificates.

- Logging at timed intervals, manual or on overload/ underload.
- Log data at speeds up to 200Hz.
- Visual and audible alarms indicate overload, underload, low battery, and communications error.
- 100% wireless, no easily damaged cables.
- 700m or 2300ft range allows operator to stand at safe distance from test.
- Connects to any Crosby SP wireless loadcell.
- Automatically creates digitally signed pass or fail certificate.
- Real-time load v time graph display.
- Three weighings per C of G report with averages and statistical analysis to ISO19901.
- Plot loadcell positioning using measurements or GPS coordinates.
- Free extra entry fields for operator, client, wind speed, sea states, and temperature available for reporting.

Copyright © 2023 The Crosby Group LLC All Rights Reserved

INSIGHT Software

Numerous proof load testing applications worldwide require a loadcell to verify the load applied. From crane testing, using water bags to pad eye testing, using hydraulic tools, the need to document test procedure and results has never been greater, especially as users of lifting equipment call for more traceability and audit trails.

A proof test is a form of stress test to demonstrate the fitness of a load-bearing structure, and is nominally a non-destructive test. Such a structure is often subjected to loads above that expected in normal use, demonstrating safety and design margin.

This demand has increased so much, Crosby Straightpoint offers a software package designed to connect to any of their wireless loadcells – Proof Test plus.

This impressive package allows the test engineer to wirelessly, at a safe distance, monitor a proof load test and automatically create a pass or fail certificate when testing is complete.

The report is formatted as a PDF, which may then be printed, emailed, or uploaded to the cloud, resulting in a traceable document for both test engineer and end customer.

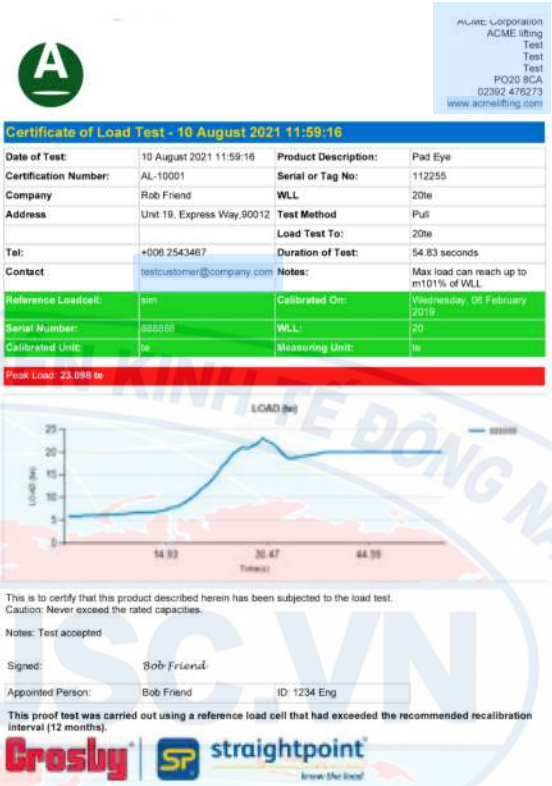

ACME Corporation
ACME lifting
Test
Test
Test
PO20 8CA
02392 476273
www.acmelifting.com

Certificate of Load Test - 10 August 2021 11:59:16

Date of Test:	10 August 2021 11:59:16	**Product Description:**	Pad Eye
Certification Number:	AL-10001	**Serial or Tag No:**	112255
Company	Rob Friend	**WLL**	20te
Address	Unit 19, Express Way,90012	**Test Method**	Pull
		Load Test To:	20te
Tel:	+006 2543467	**Duration of Test:**	54.83 seconds
Contact	testcustomer@company.com	**Notes:**	Max load can reach up to m101% of WLL
Reference Loadcell:	sim	**Calibrated On:**	Wednesday, 06 February 2019
Serial Number:	888888	**WLL:**	20
Calibrated Unit:	te	**Measuring Unit:**	te

Peak Load: 23.098 te

This is to certify that this product described herein has been subjected to the load test.
Caution: Never exceed the rated capacities.

Notes: Test accepted

Signed:	Bob Friend	
Appointed Person:	Bob Friend	ID: 1234 Eng

This proof test was carried out using a reference load cell that had exceeded the recommended recalibration interval (12 months).

Crosby | SP straightpoint

Typical load tests using Crosby SP loadcells include:

- Bollard pull tests
- Tug tests
- Crane test (water bags, block weights)
- Pad eye or fly point testing
- Crash barrier testing
  - Lifting equipment testing
  - Slings, chains, wire rope, hooks
- Construction equipment testing
  - Shoring columns, acrow props, lintels
- Lifting and spreader beam testing
- Hydraulic cylinder load test
- Supplied with SW-D transmitter

Part Numbers SP	INSIGHT med SW-D
Crosby	2789318
IP rating	IP67 / NEMA6
USB Dongle Operating Temp.	-20°C to +70°C / -4°F to 158°F
Licence	Licence free
Frequency	2.4 GHz
Range	700 meters / 2,300 feet
Loadcell Inputs	Up to 126
PC Requirements	Intel i3 processor with 2GB RAM
Operating System	Windows 7 and 10

Copyright © 2023 The Crosby Group LLC All Rights Reserved

LoadConnect Software

Crosby Straightpoint LoadConnect, connected to BaseStation, is a cloud-based solution to monitor loads and line tensions from any distance and from anywhere in the world. Stay connected, protect assets, reduce site visits, and improve safety.

- Dashboard overview.
- Live load data.
- Error reporting.
- Productivity and utilization graphs.
- Regular email reporting.
- SMS alerts.
- Connect to BOLT to monitor tension on cables.
- Connect to SP loadcells to monitor loads.

LCBS Base

How it works:

Part Number	LCBS-N	LCBS-W
Crosby	2789574	0000000
Required Power Supply	9 to 28 V DC	9 to 28 V DC
Radio Frequency	2.4 GHz (License Free)	2.4 GHz (License Free)
Maximum Number of Loadcells	16	16
Range	Up to 500 meters / 1,640 feet	Up to 500 meters / 1,640 feet
Operating Temperature Range	-10°C to 50°C / 14°F to 122°F	-10°C to 50°C / 14°F to 122°F
Backup Battery Life	16 hours	16 hours
Input Option	1x 4-20mA (2 wire) OR 1x mV/V & Wireless	1x 4-20mA (2 wire) OR 1x mV/V & Wireless
Weight	2.75 kg / 6.06 lb	2.75 kg / 6.06 lb
Network Supported	4G / 3G	Wifi
Frequency Band	LTE-TDD B34/B38/B39/B40/B41 LTE-FDD B1/B2/B3/B4/B5/B7/B8/B12/B13/ B18/B19/B20/B25/B26/B28/B66 UMTS/HSPA+ B1/B2/B4/B5/B6/B8/B19	N/A
SIM Type	Micro SIM (NOT INCLUDED)	N/A
Alert Functionality	via SMS (up to 3 pre defined numbers) Optional subscription to online dashboard	Subscription to online dashboard only *(No SMS Alerts)
IP Rating	IP67 / NEMA6	IP67 / NEMA6
Dimension	560 x 260 x 90 mm - Antennas included	560 x 260 x 90 mm - Antennas included

*Data option to be enabled on the SIM card used for full functionality
User configuration is required via free software supplied

Data option to be enabled on the SIM card used for full functionality.
User configuration required via free software supplied.

Copyright © 2023 The Crosby Group LLC All Rights Reserved

Accessories

Crosby Straightpoint's range of wireless accessories may be used with any Crosby SP wireless loadcells

Wireless Overload Alarm Module

Part Nºs SP SW-OAM Crosby 2789129

This wireless relay module features audio and visual warning indicators. The set point of the unit can be triggered from a single or summed group of up to four Crosby SP wireless loadcells. It contains two relays (NO and NC). NO is for audio and visual indications, while NC is a spare and can be used to control 230V AC / 30VDC 5A systems.

Wireless Scoreboard Display

Part Nºs SP SW-SD Crosby 2789132

This 100mm or 4" scoreboard LED display is wireless and operates between 100-240V AC. The numerals are viewable for up to 45m or 150ft, making it perfect for installation on a crane gantry. The SW-SD displays an individual load in metric tons or summed load of up to four Crosby Straightpoint wireless devices.

Wireless Base Station with Analog Output

Part Nºs SP SW-BS Crosby 2789314

The SW-BS provides a configurable analog output for any single or summed group of up to 4 loadcells Crosby Straightpoint wireless loadcell and is ideal for integration to a PC, PLC and other data acquisition. Housed in a IP65 enclosure, the output can be selected from current 4-20mA, 2 relay outputs, RS485 ASCII (Configurable) plus an optional CANbus 2.0A or 2.0B output.

Loadcell Transmitter

Part Nºs SP SA700C Crosby 2789097

The SA700C transmitter connects to strain gauge transducers such as loadcells, torque sensors and pressure transducers allowing them to form part of a Crosby Straightpoint wireless system. Load data from the SA700C can be received by multiple receivers that include SW-HHP handheld, INSIGHT software or Crosby SP's range of wireless accessories.

Wall or Cab Mount Bracket

Part Nºs SP SU3282 Crosby 2789228

Constructed from stainless steel and fitted with a viewing angle adjusting mechanism, the SU3282 bracket fits either the HHP or SW-HHP handheld displays. Ideal for wall or cab mounting, leaving the operators to work safely and hands-free.

External Amplifier

Part Nºs SP SA-3420 Crosby 2789096

The SA-3420 external amplifier allows the operator to convert the output of any of the SP cabled loadcell products into a three wire 4-20mA analog output. The weatherproof enclosure is fitted with stainless steel glands and is suitable for connection to a PLC, data logger, or other instrumentation.

Handheld Rubber Boot

Part Nºs SP SU4045 Crosby 2789232

Drop tested to one meter at –30°C, this 70SHA rubber boot is purpose molded to fit and protect the HHP and SW-HHP handheld display against impact, especially when it is used in the harshest industrial environments.

Copyright © 2023 The Crosby Group LLC All Rights Reserved

HHP 2

Up to four Crosby Straightpoint, Bluetooth load cells can be connected and monitored by up to eight smartphones, with the HHP2 app installed. It will enable more than one lifting professional to monitor the loads progress and safety, spotting potential dangers or issues from different vantage points.

The HHP2 app's simple and easy-to-use interface will enable the operator to use the app with the utmost efficiency. There are five different measurement units to choose from - tonnes, lbs, kN, kg and a custom unit.

The app records total loads, weights and lifts. This feature is useful when a particular measurement(s) is required for later referral. Added to this is the option to set the threshold and measure productivity for each load cell and the device it's rigged to, a crane, for instance, for analysis to see shortfalls and improve performance.

A peak facility can be activated to display the highest force measured alongside the live load reading of four load cells simultaneously plus a total load.

Once measurements are recorded to the app using the load monitoring project record and data log feature, the operator can export the details. The report will include load, time and date, GPS coordinates and project information to either a mobile device or send it to a particular email address in csv format.

- Connect up to four loadcells simultaneously.
- Set lift threshold and measure productivity per shift.
- View in eight different languages.
- Overload screen flash.
- Alarm latching.
- Set and record overload incidents
- Up to 100m or 328ft remote monitoring distance.
- Multiple weight unit measurement options (kN, metric tons, kg, lbs, custom unit).
- Peak hold and display value alongside live readings.
- Data-log report.
- Export data-log report.
- Zero and gross monitoring options.
- User defined resolution setup.

Copyright © 2023 The Crosby Group LLC All Rights Reserved

Handheld Plus

- Displays up to 4 loadcells simultaneously.
- Wireless range 1000m or 3280ft (ATEX 500m or 1640ft).
- Low battery warning.
- Signal strength warning.
- Overload counter.
- User settable 90db audible overload alarm.
- Multiple display units (metric tons, lbs, kg, kN).
- 200Hz peak hold.

The Handheld Plus is a rugged and versatile digital handheld display. It has an extensive range of features and is suitable for all Crosby Straightpoint loadcell products.

At the heart of the ergonomically designed Handheld Plus is a powerful PCB, providing industry-leading features such as user selectable units of measure (metric tons, lbs, kg, and kN), programmable audible overload alarm (HHP & SW-HHP), peak hold, pre-set tare, and a user resettable (HHP & SW-HHP) overload counter.

This crucial overload alarm counter is a requirement for many safety and quality control departments because it keeps track of overload events, allowing the loadcell in question to be removed from service immediately, following the calibration voiding overload event. The loadcell in question can then be sent out for proper testing and, if necessary, recalibration before re-entering service.

The HHP is suitable for connection via cable to any Crosby SP cabled loadcell product and easily adapted to any other manufacturers' loadcell product with a mv/v output.

In addition to the standard HHP the SW-HHP is suitable for connection to any Crosby SP wireless loadcell, has a range of up to 1000m/3280ft (ATEX 500m/1640ft) and is supplied as standard with the Radiolink Plus loadcell.

Part Numbers SP	HHP	SW-HHP	SW-HHP ATEX
Crosby	2789030	2789126	2789442
Battery Type	2 x AA	2 x AA	4 x AA Energizer L91
Battery Life	100 hours continuous	40 hours continuous	40 hours continuous
Display Type	240 x 128 pixel Multi-line dot matrix with backlight		
Operating Temp.	-10°C to +50°C / 14°F to 122°F	-10°C to +50°C / 14°F to 122°F	-10°C to +50°C / 14°F to 122°F
Protection	IP65 / NEMA4X		
Excitation	3.3V	N/A	N/A
Max Sensitivity	3mV/V	N/A	N/A
Range	N/A	1000 m / 3,280 ft	500 m / 1,640 ft
Connectivity	6-way female binder 723 socket	Wireless 2.4GHz	Wireless 2.4GHz

Accessories available for the handheld:

Wall or cab mount bracket
Crosby SP part numbers
SU3282 2789228

Rugged rubber boot
Crosby SP part numbers
SU4045 2789232

Also available with hazardous area approval

ATEX / IECEx
Ex ia II C T4 Ga
Certification number:
SW-HHP ATEX
IECEx SIR 15.0072X
Sira 15ATEX2196X
When ordering
ATEX/IECEx version of
SW-HHP, order using code:
SW-HHP-ATEX
Please note:
There is no audible alarm with ATEX

Please note:
There is no audible alarm with ATEX

Copyright © 2023 The Crosby Group LLC All Rights Reserved

SubseaLink

- Manufactured for use in subsea or submersible projects.
- On board data-logging option.
- Pressure tested to depth of 2000m/6562ft.
- SubConn connector.
- Environmental protection IP68/NEMA6P.
- Output options include mV/V to the Crosby SP Handheld Plus, 4-20mA or 0-10v analog to a PLC, data-logger or The Multi Operation Survey System (MOSS), RS485 or an integral data-logger storing up to one million readings and powered by an internal battery.
- Constructed from 17-4PH stainless steel.
- Designed to fit with The Crosby Group ROV shackles.
- Option for ROV mounting on the SL body itself.

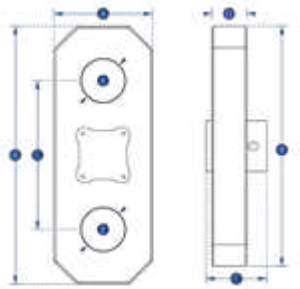

Part Numbers SP		SL6T5	SL12T	SL25T	SL35T	SL55T	SL85T	SL120T
Crosby		2789352	2789353	2789354	2789355	2789356	2789357	2789358
WLL	(te)	6.5	12	25	35	55	85	120
	(lb)	14,300	26,000	55,000	77,000	120,000	185,000	260,000
Weight	(kg)	7	10	16	22	34	46	67
	(lb)	15	23	34	49	75	101	148
Design Factor		5:1						
Output		Options for: mV/V / 4-20mA / 0-10v / RS485 or internal data logger						
Operating Temp.		-10°C to +50°C / 14°F to 122°F						
Accuracy		±0.1% of full scale						
Max depth of use		2,000 meters / 6,562 feet						
Material		17-4 PH Stainless steel						
MTBF to WLL		Typically 50 million cycles						
Elongation		Typically <0.4mm / at WLL						
Dimension A	(mm)	95	100	130	150	168	190	220
	(in)	3.74	3.94	5.12	5.91	6.69	7.48	8.66
Dimension B	(mm)	240	300	350	400	450	490	550
	(in)	9.45	11.81	13.78	15.75	17.72	19.29	21.65
Dimension C	(mm)	180	200	230	250	260	290	335
	(in)	7.09	7.87	9.06	9.84	10.24	11.42	13.19
Dimesnion D	(mm)	25	40	45	50	65	75	86
	(in)	0.98	1.57	1.77	1.97	2.56	2.95	3.39
Dimension ØE	(mm)	30	40	55	60	75	88	100
	(in)	1.18	1.57	2.17	2.36	2.95	3.46	3.94
Dimension F	(mm)	73	88	93	98	113	123	134
	(in)	2.87	3.46	3.66	3.86	4.45	4.84	5.28
Crosby Shackle		G2140 or G2100 or G2110 ROV shackles						

Data-logger Measurement Rate	Days
1 per second	10
1 per 30 seconds	57
1 per minute	729
1 per 2 minutes	1445
1 per 30 minutes	3423
1 per hour	3600
1 per 2 hours	3694
1 per 8 hours	3769

Copyright © 2023 The Crosby Group LLC All Rights Reserved

Loadlink Plus

Optional connection to Crosby SP's Handheld Plus
part no. HHP 2789459

- Capacity from 1t to 300t.
- Unmatched weight-to-strength ratio.
- 30% lighter than competing dynamometers with the same safety rating.
- Large high resolution 25mm or 1in LCD display.
- Features full function push button controls for tare, choice of units (lbs, kg, kN, and metric tons), peak hold, preset tare, audible set-point alarm, and an overload counter.
- The highest standard resolution of any digital dynamometer on the market today (5000+ divisions).
- 100Hz peak hold.
- RS-485 serial output.
- 2-year warranty.
- DNV-GL Type Approval.
- Design validated by FEA.
- Complies with ASME B30.26.

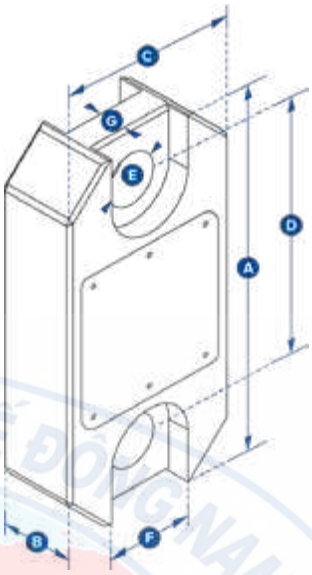

Part Numbers SP		LLP1T	LLP2T5	LLP6T5	LLP12T	LLP25T	LLP35T	LLP55T	LLP75T	LLP100T	LLP150T	LLP200T	LLP250T	LLP300T
Crosby		2789042	2789046	2789050	2789040	2789045	2789048	2789049	2789051	2789039	2789041	2789043	2789044	2789047
Capacity	(te)	1000 kg	2.5	6.5	12	25	35	55	75	100	150	200	250	300
	(lb)	2,200	5,500	14,300	26,000	55,000	77,000	120,000	165,000	220,000	330,000	440,000	550,000	660,000
Resolution	(te)	0.5kg	0.001	0.001	0.002	0.005	0.005	0.01	0.01	0.05	0.05	0.1	0.1	0.1
	(lb)	1	2	2	5	10	10	20	20	100	100	200	200	200
Units	(metric)	kg	metric tons											
	(imperial)	pounds	pounds											
Weight	(kg)	1.5	1.5	2.4	3.7	5	8.6	13	16	34	46	82	82	118
	(lb)	3.3	3.3	5.3	8.2	11	19	28.7	35.3	75	101.4	180.8	180.8	260
Design Factor		12:1	7:1	7:1	7:1	5:1	5:1	5:1	5:1	5:1	4:1	5:1	4:1	5:1
Battery Type		9v PP3												
Battery Life		80 hours continuous												
Display Type		6 digit 25mm or 1" LCD												
Operating Temp.		-10°C to +50°C / 14°F to 122°F												
Accuracy		±0.1% of full scale												
Protection		IP65 / NEMA4X												
Dimension A	(mm)	204	204	249	305	340	393	424	470	608	670	700	700	806
	(in)	8.03	8.03	9.80	12.01	13.39	15.47	16.69	18.50	23.94	26.38	27.56	27.56	31.73
Dimension B	(mm)	43	43	43	47	60	75	75	75	99	99	144	144	150
	(in)	1.69	1.69	1.69	1.85	2.36	2.95	2.95	2.95	3.90	3.90	5.67	5.67	5.91
Dimension C	(mm)	104	104	113	113	115	126	180	202	255	303	350	350	426
	(in)	4.09	4.09	4.45	4.45	4.53	4.96	7.09	7.95	10.04	11.93	13.78	13.78	16.77
Dimension D	(mm)	146	146	165	193	215	225	230	260	320	360	350	350	350
	(in)	5.75	5.75	6.50	7.60	8.46	8.86	9.06	10.24	12.60	14.17	13.78	13.78	13.78
Dimension ØE	(mm)	24.5	24.5	38	47.5	55	60	76	76	109	109	145	145	160
	(in)	0.96	0.96	1.50	1.87	2.17	2.36	2.99	2.99	4.29	4.29	5.71	5.71	6.30
Dimension F	(mm)	48	48	66	66	66	66	66	66	66	66	66	66	66
	(in)	1.89	1.89	2.60	2.60	2.60	2.60	2.60	2.60	2.60	2.60	2.60	2.60	2.60
Dimension G	(mm)	19	19	32	32	32	32	32	32	32	32	32	32	32
	(in)	0.75	0.75	1.26	1.26	1.26	1.26	1.26	1.26	1.26	1.26	1.26	1.26	1.26
Crosby Shackle		G2130						G2140						
Loading Pin Ø	(mm)	19	19	25	35	51	57	57	70	83	95	121	127	152
	(in)	3/4	3/4	1	1 3/8	2	2 1/4	2 1/4	2 3/4	3 1/4	3 3/4	4 3/4	5	6

Copyright © 2023 The Crosby Group LLC All Rights Reserved

Wirelink Plus

- Available in capacities ranging from 1t to 300t.
- The non-indicating version of Crosby SP's popular Radiolink Plus and Loadlink Plus digital dynamometer tension loadcells.
- Multiple output options to include mV/V, analog out, ASCII, MODBUS RTU, and CAN-BUS.
- Constructed of lightweight, aerospace grade aluminum.
- Available with IP68 environmental protection.
- supplied with a 10-meter cable as standard, however, usable cable length varies greatly with lengths available to 1,500 meters depending on output format.
- Options for subsea use available.
- 2-year warranty.
- DNV-GL Type Approval.
- Complies with ASME B30.26.

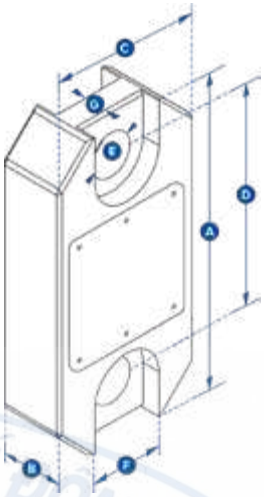

Part Numbers SP		WLP1T	WLP2T5	WLP6T5	WLP12T	WLP25T	WLP35T	WLP55T	WLP75T	WLP100T	WLP150T	WLP200T	WLP250T	WLP300T
Crosby		2789154	2789158	2789273	2789152	2789157	2789160	2789269	2789161	2789151	2789153	2789155	2789156	2789159
Capacity	(te)	1000 kg	2.5	6.5	12	25	35	55	75	100	150	200	250	300
	(lb)	2,200	5,500	14,300	26,000	55,000	77,000	120,000	165,000	220,000	330,000	440,000	550,000	660,000
Resolution	(te)	0.5 kg	0.001	0.001	0.002	0.005	0.005	0.01	0.01	0.05	0.05	0.1	0.1	0.1
	(lb)	1	2	2	5	10	10	20	20	100	100	200	200	200
Units	(metric)	kg	metric tons											
	(imperial)	pounds	pounds											
Weight	(kg)	1.5	1.5	2.4	3.7	5	8.6	13	16	34	46	82	82	118
	(lb)	3.3	3.3	5.3	8.2	11	19	28.7	35.3	75	101.4	180.8	180.8	260
Design Factor		12:1	7:1	7:1	7:1	5:1	5:1	5:1	5:1	5:1	4:1	5:1	4:1	5:1
Operating Temp.		-10°C to +50°C / 14°F to 122°F												
Accuracy		±0.1% of full scale												
Protection		IP67 / NEMA6												
Dimension A	(mm)	204	204	249	305	340	393	424	470	608	670	700	700	806
	(in)	8.03	8.03	9.80	12.01	13.39	15.47	16.69	18.50	23.94	26.38	27.56	27.56	31.73
Dimension B	(mm)	43	43	43	47	60	75	75	75	99	99	144	144	150
	(in)	1.69	1.69	1.69	1.85	2.36	2.95	2.95	2.95	3.90	3.90	5.67	5.67	5.91
Dimension C	(mm)	104	104	113	113	115	126	180	202	255	303	350	350	426
	(in)	4.09	4.09	4.45	4.45	4.53	4.96	7.09	7.95	10.04	11.93	13.78	13.78	16.77
Dimension D	(mm)	146	146	165	193	215	225	230	260	320	360	350	350	350
	(in)	5.75	5.75	6.50	7.60	8.46	8.86	9.06	10.24	12.60	14.17	13.78	13.78	13.78
Dimension ØE	(mm)	24.5	24.5	38	47.5	55	60	76	76	109	109	145	145	160
	(in)	0.96	0.96	1.50	1.87	2.17	2.36	2.99	2.99	4.29	4.29	5.71	5.71	6.30
Dimension F	(mm)	48	48	65	Not relevant in this capacity									
	(in)	1.89	1.89	2.60										
Dimension G	(mm)	19	19	32										
	(in)	0.75	0.75	1.26										
Crosby Shackle		G2130						G2140						
Loading Pin Ø	(mm)	19	19	25	35	51	57	57	70	83	95	121	127	152
	(in)	3/4	3/4	1	1 3/8	2	2 1/4	2 1/4	2 3/4	3 1/4	3 3/4	4 3/4	5	6

Part Number	Description
ICA1	3 wire 0-10v analogue output
ICA2	3 wire 0-5v analogue output
ICA3	4 wire +/- 10v analogue output
ICA4	3 wire 4-20mA analogue output
ICA5	2 wire 4-20mA analogue output

Copyright © 2023 The Crosby Group LLC All Rights Reserved

Loadshackle

Requires connection to Crosby Straightpoint's Handheld Plus (HHP) or External Amplifier range (SA-3420) that can be configured to provide 4-20mA output for PLC or data logger integration.

- Capacities of 3.25t to 400t, as well as being obtainable up to 3000t.
- Compact size, low headroom, lightweight.
- Every Loadshackle is proof tested.
- Utilizes the same advanced microprocessor based electronics as Crosby SP products.
- Unrivaled resolution.
- Environmentally sealed to IP67 or NEMA6.
- Advanced options available for subsea applications.
- Manufactured using Crosby 2130 Carbon and 2140 Alloy Bolt Type Anchor industry leading shackles.
- Configured with output formats to include mV/V, RS-422, RS-485, utilizing the ASCII, MODBUS RTU, and CAN-BUS protocols or supplied with integral amplifier allowing analog outputs such as 4-20mA, 0-10v, 0-5v etc.
- mv/v or analog signal options.
- Design validated by FEA.

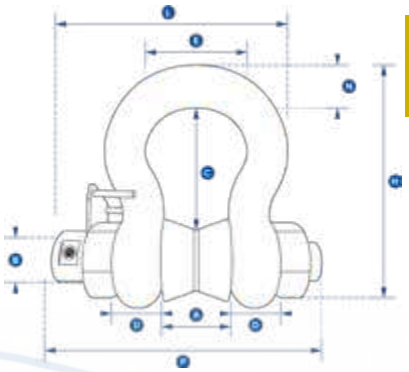

Part Numbers SP		SLB 3.25T	SLB6.5T	SLB12T	SLB25T	SLB55T	SLB85T	SLB120T	SLB200T	SLB300T	SLB400T
Crosby		2789106	2789111	2789103	2789105	2789110	2789112	2789102	2789104	2789107	2789108
Capacity	(te)	3.25	6.5	12	25	55	85	120	200	300	400
	(lb)	7,150	14,300	26,400	55,000	120,000	185,000	260,000	440,000	660,000	880,000
Resolution	(te)	0.005	0.005	0.01	0.02	0.05	0.05	0.1	0.2	0.5	0.5
	(lb)	10	10	20	50	100	100	200	200	1000	1000
Units	(metric)	metric tons									
	(imperial)	pounds									
Weight	(kg)	2.8	3.2	8	18	25	85	125	260	405	662
	(lb)	6.16	7	17.6	40	55	187	276	573	893	1459
Design Factor		5:1 when used with load bobbin									
Operating Temp.		-10°C to +50°C / 14°F to 122°F									
Accuracy		±1% of full scale									
Protection		IP67 std [or sub sea as POA option] / NEMA6									
Dimension A	(mm)	26.9	36.6	51.5	73	82.5	127	144	180	205	230
	(in)	1.06	1.44	2.03	2.87	3.25	5.00	5.66	7.09	8.07	9.06
Dimension ØB	(mm)	19.1	25.4	35.1	51	57	83	95	125	150	175
	(in)	0.75	1.00	1.38	2.01	2.24	3.26	3.74	4.92	5.91	6.89
Dimension C	(mm)	56.9	79.7	113	170	189.5	317	364	432.2	505	547.7
	(in)	2.24	3.14	4.45	6.69	7.46	12.48	14.33	17.02	19.88	21.56
Dimension D	(mm)	14.46	20.6	29.5	44.5	51	80	89	110	120	160
	(in)	0.57	0.81	1.16	1.75	2.01	3.14	3.50	4.33	4.72	6.30
Dimension E	(mm)	42.9	58	82.5	127	146	190	238	280	305	325
	(in)	1.69	2.28	3.25	5.00	5.75	7.48	9.37	11.02	12.01	12.80
Dimension H	(mm)	106	148	210	313	348	539	624	769	904	1006.5
	(in)	4.17	5.83	8.27	12.32	13.70	21.22	24.56	30.28	35.59	39.63
Dimension L	(mm)	125	146.5	191	265	296	384	434	519.7	576.7	657.2
	(in)	4.92	5.77	7.52	10.43	11.65	15.11	17.12	20.46	22.7	25.87
Dimension N	(mm)	17.5	24.6	35.1	57	61	85	95	120	140	160
	(in)	0.69	0.97	1.38	2.24	2.40	3.34	3.74	4.72	5.51	6.30
Dimension P	(mm)	140	163	212	280	307	438	478	590	647	755
	(in)	5.51	6.42	8.35	11.02	12.09	17.24	18.81	23.23	25.47	29.72
Crosby Shackle		G2130				G2140	S2135				

Copyright © 2023 The Crosby Group LLC All Rights Reserved

Compression Loadcell

- Ranges from 5te to 1000te.
- High grade stainless steel, offering excellent strength and anti-corrosion properties.
- Can be supplied with optional loadcaps.
- Environmentally sealed to IP67 or NEMA6.
- Optional analog outputs.
- Lightweight, compact size.
- 10m or 30ft cable supplied as standard (other lengths available).
- Custom versions available.
- Design validated by FEA.

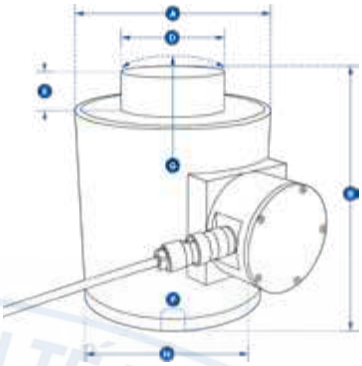

Requires connection to Crosby Straightpoint's Handheld Plus (HHP) or External Amplifier range (SA-3420) that can be configured to provide 4-20mA output for PLC or data logger integration.

Part Numbers SP		NI5TC	NI10TC	NI25TC	NI50TC	NI100TC	NI150TC	NI300TC	NI500TC	NI1000TC
Crosby		2789068	2789062	2789065	2789067	2789061	2789063	2789064	2789066	2789275
Capacity	(te)	5	10	25	50	100	150	300	500	1000
	(lb)	11,000	22,000	55,000	110,000	220,000	330,000	660,000	1,100,000	2,200,000
Resolution	(te)	0.001	0.002	0.005	0.01	0.05	0.05	0.1	0.2	0.5
	(lb)	2	5	10	20	100	100	200	500	1000
Units	(metric)	metric tons								
	(imperial)	pounds								
Weight	(kg)	6.2	6.2	6.2	6.2	15.5	15.5	65	65	172
	(lb)	13.64	13.64	13.64	13.64	34	34	143	143	379
Design Factor		3:1								
Operating Temp.		-10°C to +50°C / 14°F to 122°F								
Accuracy		±0.1% of full scale								
Protction		IP67 / NEMA6								
Dimension ØA	(mm)	100	100	100	100	152	152	185	185	362
	(in)	3.94	3.94	3.94	3.94	5.98	5.98	7.28	7.28	14.25
Dimension B	(mm)	127	127	127	127	184	184	300	300	310
	(in)	5.00	5.00	5.00	5.00	7.24	7.24	11.81	11.81	12.20
Dimension ØD	(mm)	59	59	59	59	80	80	155	155	270
	(in)	2.32	2.32	2.32	2.32	3.15	3.15	6.10	6.10	10.63
Dimension E	(mm)	16	16	16	16	26	26	27.5	27.5	40
	(in)	0.63	0.63	0.63	0.51	1.02	1.02	1.08	1.08	1.57
Dimension F	(mm)	M18 x 2.5	M18 x 2.5	M18 x 2.5	M20 x 2.5	M20 x 2.5	M20 x 2.5	M20 x 2.5	M20 x 2.5	M30 x 3.5
	(mm)	M18 x 2.5	M18 x 2.5	M18 x 2.5	M20 x 2.5	M20 x 2.5	M20 x 2.5	M20 x 2.5	M20 x 2.5	M30 x 3.5
Dimension G	(mm)	152	152	152	152	432	432	432	432	950
	(in)	5.98	5.98	5.98	5.98	17.01	17.01	17.01	17.01	37.40
Dimension H	(mm)	158	158	158	158	204	204	237	237	416
	(in)	6.22	6.22	6.22	6.22	8.03	8.03	9.33	9.33	16.38

Copyright © 2023 The Crosby Group LLC All Rights Reserved

Loadpin

- Designed for use in applications where an end of line loadcell cannot be used, meaning an integrated solution is required.
- High tensile stainless steel.
- Supplied complete with an anti-rotation plate as a cabled or wireless solution.
- Built to withstand the harshest environments in industries such as marine and offshore oil and gas.
- Suitable for use in exposed situations and can also be supplied to withstand immersion in seawater at extreme depths.
- Supplied with a 10 meter or 32ft cable as standard, however, usable cable length varies greatly with lengths available to 1500 meters or 4900ft, depending on output format.
- Include mV/V, RS-485, utilizing the ASCII, MODBUS RTU and CAN-BUS protocols or an analog output such as 4-20mA for PLC integration.
- Design validated by FEA.

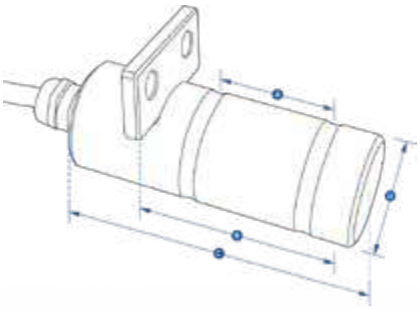

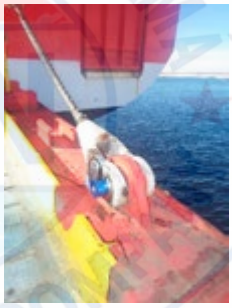

Also available with hazardous area approval. Zones 0, 1 & 2

ATEX / IECEx
Ex ia II C T4 Ga

Certification numbers:
LP ATEX
IECEx SIR 16.0041X/Sira 16ATEX2108X
SW-HHP ATEX
IECEx SIR 15.0072X/Sira 15ATEX2196X

Add 'ATEX' to the part number when ordering ATEX/IECEx products. For example: LP500KG-ATEX

Note: Please advise cable configuration on order – Radial or axial pin exit. If you require a Loadpin to a particular size and design, download Crosby Straightpoint's Loadpin questionnaire and return, POA. thecrosbygroup.com/loadpin

Requires connection to Crosby Straightpoint's Handheld Plus (HHP) or External Amplifier range (SA-3420) that can be configured to provide 4-20mA output for PLC or data logger integration.

Part Numbers SP		LP500kg	LP1T	LP2.5T	LP3.5T	LP6.5T	LP15T	LP25T	LP50T	LP100T	LP250T	LP500T	LP750T	LP1000T	LP1500T
Crosby		2789276	2789277	2789278	2789279	2789280	2789281	2789282	2789283	2789284	2789285	2789286	2789287	2789288	2789289
Capacity	(te)	500 kg	1000 kg	2.5	3.5	6.5	15	25	50	100	250	500	750	1000	1500
	(lb)	1,100	2,200	5,500	7,700	14,000	33,000	55,000	110,000	220,000	550,000	1,100,000	1,650,000	2,200,000	3,300,000
Resolution	(te)	0.2 kg	0.5 kg	0.001	0.001	0.002	0.002	0.005	0.01	0.05	0.1	0.2	0.2	0.5	0.5
	(lb)	0.5	1	2	2	5	5	10	20	100	200	500	500	1000	1000
Units	(metric)	kilograms, metric tons													
	(imperial)	pounds													
Weight	(kg)	0.9	1	1.2	1.4	2	3.1	5.6	8.6	11.8	29.8	79.2	146	275	389
	(lb)	0.4	0.5	0.9	1.3	2.6	5	10.3	18	24	64	172	319	603	854
Design Factor		3:1													
Operating Temp.		-10°C to +50°C / 14°F to 122°F													
Accuracy		±1% of full scale													
Protection		IP67 [IP68 available as an option]													
		NEMA6 [NEMA6P available on application]													
Dim. A	(mm)	24	35	45	50	63	75	89	102	110	130	225	295	360	430
	(in)	0.94	1.38	1.77	1.97	2.48	2.95	3.50	4.02	4.33	5.12	8.86	11.61	14.17	16.93
Dim. B	(mm)	36	49	70	75	95	114	152	178	190	220	370	500	612	731
	(in)	1.42	1.93	2.76	2.95	3.74	4.49	5.98	7.01	7.48	8.66	14.57	19.69	24.09	28.78
Dim. C	(mm)	70	80	100	105	125	150	195	225	230	300	440	590	712	832
	(in)	2.76	3.15	3.94	4.13	4.92	5.91	7.68	8.86	9.06	11.81	17.32	23.23	28.03	32.76
Dim. ØD	(mm)	20	20	25	30	40	50	63	75	88	125	170	200	250	275
	(in)	0.79	0.79	0.98	1.18	1.57	1.97	2.48	2.95	3.46	4.92	6.69	7.87	9.84	10.83

Copyright © 2023 The Crosby Group LLC All Rights Reserved

Loadblock Plus

- The highest standard resolution of any self-indicating compression loadcell on the market today (5000+ divisions).
- Low capacity, self-indicating compression loadcell.
- Large 25mm or 1in LCD display.
- 100Hz peak hold.
- Compact size.
- Push button tare.
- Preset tare.
- Peak hold.
- RS485 port for connection to data-logging system allowing remote viewing.
- Audible set-point alarm and an overload counter.
- Selectable units te, lbs, kN, kg.

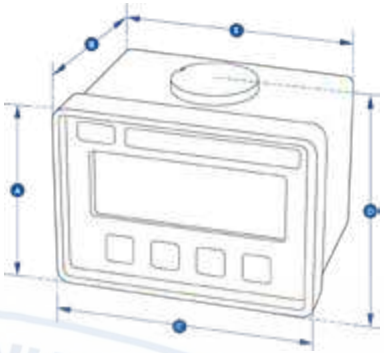

Part Numbers SP		LBP250KG	LBP500KG	LBP1T	LBP2T	LBP5T
Crosby		2789035	2789037	2789034	2789036	2789038
Capacity	(te)	250 kg	500 kg	1	2	5
	(lb)	550	1100	2200	4400	11000
Resolution	(te)	0.1 kg	0.2 kg	0.0005	0.001	0.001
	(lb)	0.2	0.5	1	2	2
Units	(metric)	metric tons, kilograms, kilonewtons and pounds				
	(imperial)	pounds, metric tons, kilonewtons and kilograms				
Weight	(kg)	0.9	0.9	0.9	1.5	3.1
	(lb)	2	2	2	3.3	6.8
Design Factor		4:1	5:1	5:1	5:1	5:1
Battery Type		9v PP3				
Battery Life		80 hours continuous				
Display Type		6 digit 25mm LCD or 6 digit 1" LCD				
Operating Temp.		-10°C to 50°C / 14°F to 122°F				
Accuracy		±0.1% of full scale				
Protection		IP65 / NEMA4X				
Dimension A	(mm)	81	81	81	92	92
	(in)	3.19	3.19	3.19	3.62	3.62
Dimension B	(mm)	81	81	81	117	136
	(in)	3.19	3.19	3.19	4.61	5.35
Dimension C	(mm)	113	113	113	112	112
	(in)	4.45	4.45	4.45	4.41	4.41
Dimension D	(mm)	90	90	90	104	115
	(in)	3.54	3.54	3.54	4.09	4.53
Dimension E	(mm)	104	104	104	Not available in this capacity	
	(in)	4.09	4.09	4.09		

CÔNG TY CỔ PHẦN PHÁT TRIỂN KINH TẾ ĐÔNG NAM Á
ASEANJSC.VN
ASEAN DEVELOPMENT JOINT STOCK COMPANY
ISO 9001:2015
Since 2006

Copyright © 2023 The Crosby Group LLC All Rights Reserved

Miniweigher Plus

- Compact size and lightweight.
- Capacities from 100kg to 5t.
- Large 25mm or 1in LCD display.
- High accuracy.
- Selectable Units te, lbs, kN, kg.
- Highest resolution of any compact digital crane scale on the market.
- Peak hold.
- Preset tare.
- Overload counter.
- 90dB audible set point alarm.
- RS-485 serial output.
- Corrosion-resistant finish.

Optional connection to Crosby SP's Handheld Plus – Crosby SP Part Nos. HHP 2789459.

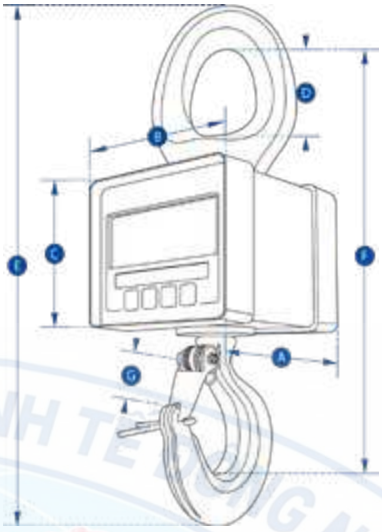

Part Numbers SP	MWP100KG	MWP250KG	MWP500KG	MWP1T	MWP2T	MWP5T
Crosby	2789055	2789057	2789059	2789056	2789058	2789060
Capacity (kg)	100	250	500	1000	2 t	5 t
(lb)	220	550	1100	2200	4400	11000
Resolution (kg)	0.05	0.1	0.2	0.5	0.001 t	0.001 t
(lb)	0.1	0.2	0.5	1	2	2
Units (metric)	metric tons, kilograms, kilonewtons and pounds					
Weight (kg)	1.5	1.5	1.5	1.5	3.1	8.7
(lb)	3.3	3.3	3.3	3.3	6.8	19.2
Design Factor	10:1	5:1	5:1	5:1	5:1	5:1
Battery Type	9v PP3					
Battery Life	80 hours continuous					
Display Type	6 digit 25mm LCD or 6 digit 1in LCD					
Operating Temp.	-10°C to +50°C / 14°F to 122°F					
Accuracy	±0.1% of full scale					
Protection	IP65 / NEMA4X					
Dimension A (mm)	81	81	81	81	117	136
(in)	3.19	3.19	3.19	3.19	4.61	5.35
Dimension B (mm)	112	112	112	112	112	112
(in)	4.41	4.41	4.41	4.41	4.41	4.41
Dimension C (mm)	81	81	81	81	92	92
(in)	3.19	3.19	3.19	3.19	3.62	3.62
Dimension D (mm)	33	33	33	33	43	62
(in)	1.30	1.30	1.30	1.30	1.69	2.44
Dimension E (mm)	222	222	222	222	283	349
(in)	8.74	8.74	8.74	8.74	11.14	13.74
Dimension F (mm)	183	183	183	183	238	286
(in)	7.20	7.20	7.20	7.20	9.37	11.26
Dimension G (mm)	22	22	22	22	28	42
	0.87	0.87	0.87	0.87	1.10	1.65

Copyright © 2023 The Crosby Group LLC All Rights Reserved

CÔNG TY CỔ PHẦN PHÁT TRIỂN ASEAN
ASEAN DEVELOPMENT JOINT STOCK COMPANY
ISO 9001:2015
Since 2006

SETTING THE STANDARD IN CELL TOWER SECUREMENT

The Crosby Group offers a wide range of solutions for the cell tower industry. Our products have been put through rigorous testing to ensure optimal functionality and safety ratings.

Blocks & overhaul balls
Turnbuckles
Shackles
Wire rope clips
Tensionmeters
Load monitoring technologies

Clamp On Line Tensionmeter (COLT)

BlueLink

Bolt On Line Tensionmeter (BOLT)

thecrosbygroup.com

CÔNG TY CỔ PHẦN PHÁT TRIỂN KINH TẾ ĐÔNG NAM Á
ASEAN JSC.VN
ASEAN DEVELOPMENT JOINT STOCK COMPANY
ISO 9001:2015
Since 2003

BLOKCAM

Improving safety, communication & productivity

CAMERA SYSTEMS

Advanced monitoring products to improve safety, communication and productivity at the work site.

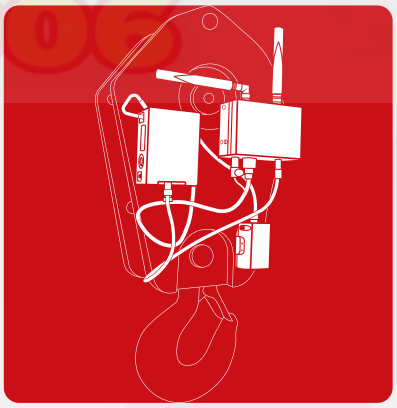

CÔNG TY CỔ PHẦN PHÁT TRIỂN KINH TẾ ĐÔNG NAM Á
ASEAN JSC.VN
ASEAN DEVELOPMENT JOINT STOCK COMPANY
ISO 9001:2015
Since 2008

WHAT IS BLOKCAM?

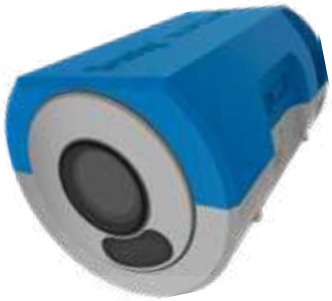

BlokCam is a wireless system that can be quickly and easily deployed to the hook block or boom tip of a crane.

The sound and view from below the camera is then transmitted and received wirelessly via the antenna systems to a screen in the cab.This allows the operator to see and hear the load and surroundings, giving an unobstructed, live, audio-visual feed of the critical areas that working in the blind would never allow.

HOW BLOKCAM WORKS

1. On the hook block and/or boom tip

The sensor captures the audio-visual feed and sends it to the transmitter. The signal is then transmitted to a repeater on the jib, boom or cab.

The battery powers both the transmitter and the sensor. Each component attaches magnetically and can be mounted on the block, including between the cheek plates and on the boom tip.

2. Repeater on the jib/boom and/or cab

The repeater receives the wireless signal from the transmitter and is relayed back to a monitor in the cab. The repeater position and configuration is dependent on the type of crane, type of jib/boom and length of jib/boom.

3. In the operator's cab

The live audio-visual feed is then processed and displayed on the screen positioned inside the cab, allowing the operator to see and hear live footage of everything below the camera.

TESTIMONIALS

"Baker | DC and our crane operators have been using BlokCam cameras for more than 3 years. Our crane operators now are requesting BlokCams on cranes whenever their new projects start-up. On our Wharf project in Washington DC we had 5 tower cranes, each equipped with a BlokCam and Office Link. While the cameras allow our operators to safely and confidently make picks when in the blind, the Office Link and its ability to record the camera footage has proven to be invaluable at improving job-site efficiency and providing historical information for safety training and job-site documentation."

Jason Rhine
Project Executive
Baker | DC

"HTC started working with Crosby BlokCam in 2015 - on first impressions we were very impressed by the level of expertise and professionalism of this company. We are proud to work in partnership with Crosby BlokCam and are delighted with the service which we are able to provide to our customers. It is great to work with such a forward-thinking and proactive company. Crosby BlokCam's experience and knowledge of the crane industry has allowed them to develop and offer the highest quality system on the market. Therefore, we are looking forward to many more years of working together."

Elliott Simpson
Accessories Manager
WOLFF Onsite

"BlokCam is one of the best investments London Tower Cranes has made. The quality, ability, and value of their camera system is second to none. We have found the BlokCam to be an invaluable asset for the crane operators, lifting teams and business as a whole."

Martin Harvey
Managing Director
London Tower Cranes

Copyright © 2023 The Crosby Group LLC All Rights Reserved

X3L CAMERA SYSTEM (PART NO. 7380008)

TOWER CRANES

Design Overview

- Easy and quick to install; can be fitted within an hour
- Uses high powered neodymium magnets
- The lens is auto-focus and always gives clear views of the load and surrounding area below the hook
- HD 1080p resolution
- Audio from sensor to cab
- Optional single and split screen mode with additional cameras
- Long range transmission [5]
- Record on loop for up to 30 days
- Purpose built aluminum housing
- Multiple built in lanyard anchors
- Safety lanyard provides secondary security tethering
- Hands-free operation
- Multi positional sensor for variable views
- LED indicators
- Two batteries per system
- Non hazardous battery
- 12 hour battery life [3]
- Multi-voltage AC and DC inputs
- Durable all-weather design, manufactured to IP67 [4] rating
- -20°C to 55°C (-4°F to 131°F) operating temperature
- Optional mobile app and 4G live streaming [2]
- CE and FCC approved
- High quality industrial connectors
- Color coded connectors

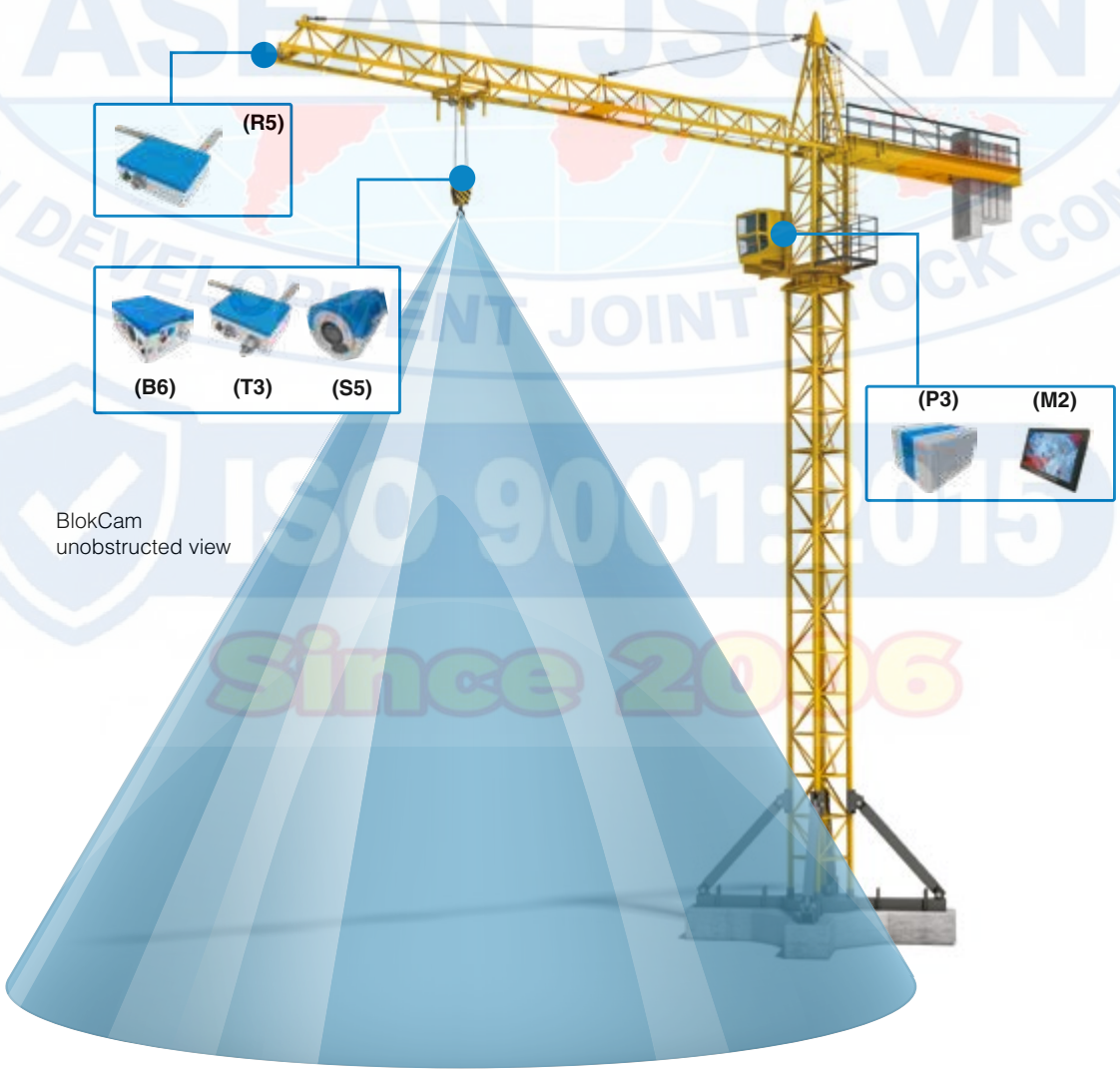

More information, hook mounted safety system and accessories available online at thecrosbygroup.com/blokcam.

Copyright © 2023 The Crosby Group LLC All Rights Reserved

Crosby | BLOKCAM

Modular design, compatible across a wide variety of cranes [1]

WHAT'S INCLUDED

Sensor (S5)

Part No. 7370022

The S5 is a 113° wide angle lens. The low profile design, tool free operation and rotatable lens allows for easy installation on any side of the hook block including in between the cheek plates.

Transmitter (T3)

Part No. 7370023

T3 dramatically improves the most important aspects of the BlokCam. The combination of performance, specification, aesthetics and 71mm low profile design make this a must for all crane operations. Connect up to two sensors.

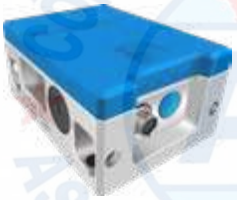

Battery (B6)

Part No. 7370032

B6 is a non hazardous lithium 14.54v Battery Pack. The clever tool-free design and easy grip finger slots makes it easy to install, remove and charge. IP67.

Charging Station (B6-CH3)

Part No. 7360033

Our Li-Ion Charger is designed to improve the efficiency of your BlokCam Batteries and the performance of the camera system.

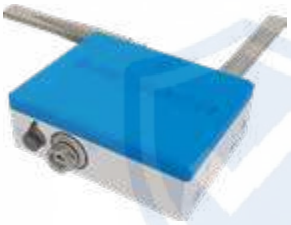

Repeater (R5)

Part No. 7370020

Depending on the crane type and required installation the Repeater is mounted on the jib, boom tip or cab.The Repeater has been specifically designed for fast, wireless, telescopic deployment.

Monitor (M2)

Part No. 7360019

Our HD Monitor is a 10.1in 16:9 LCD monitor with built in speakers and a HDMI input. It has a 1280 x 800 pixel panel with automatic brightness control.

Processor (P3)

Part No. 7370029

Our purpose built Processor can project multiple high definition images and audio's through a single HDMI lead with less than 0.2 seconds of latency. The design of the Processor accomodates multivoltage AC and DC inputs making your BlokCam system compatible across all types of cranes. The Processor also provides power to the monitor, eliminating the need for a secondary socket or power supply.

Copyright © 2023 The Crosby Group LLC All Rights Reserved

M3L CAMERA SYSTEM (PART NO. 7380009)

MOBILE & TELESCOPIC CRANES

Design Overview

- Specifically designed for the mobile and crawler market
- Can be installed and removed within 5 minutes
- Uses high powered neodymium magnets
- The lens is auto-focus and always gives clear views of the load and surrounding area below the hook
- HD 1080p resolution
- Audio from sensor to cab
- Long range transmission[5]
- Record on loop for up to 30 days
- Purpose built aluminum housing
- Multiple built in lanyard anchors
- Safety lanyard provides secondary security tethering
- Hands-free operation
- Multi positional sensor for variable views
- LED indicators
- Two batteries per system
- Non hazardous battery
- 12-hr battery life[3]
- Multi-voltage AC and DC inputs
- Durable all-weather design, manufactured to IP67[4] rating
- -20°C to 55°C (-4°F to 131°F) operating temperature
- Optional mobile app and 4G live streaming [2]
- CE and FCC approved
- High quality industrial connectors
- Color coded connectors

Copyright © 2023 The Crosby Group LLC All Rights Reserved

Crosby | BLOKCAM

Modular design, compatible across a wide variety of cranes [1]

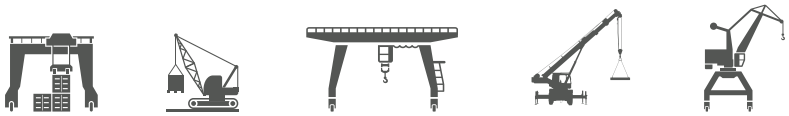

WHAT'S INCLUDED

Monitor (M3)

Part No. 7370014

The M3 is an all in one display that combines a monitor, repeater and processor in to a purpose built fast fit system. The M3 has a HD display with built in speakers, automatic brightness control, less than 0.2 seconds of latency and multi-voltage AC and DC inputs.

Sensor (S5)

Part No. 7370022

The S5 is a 113° wide angle lens. The low profile design, tool free operation and rotatable lens allows for easy installation on any side of the hook block including in between the cheek plates.

Transmitter (T3)

Part No. 7370023

T3 dramatically improves the most important aspects of the BlokCam. The combination of performance, specification, aesthetics and 71mm low profile design make this a must for all crane operations. Connect up to two sensors.

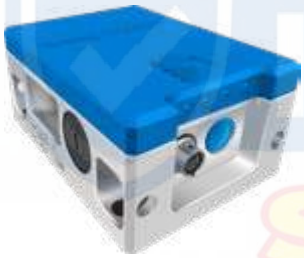

Battery (B6)

Part No. 7370032

B6 is a non hazardous lithium 14.54v Battery Pack. The clever tool-free design and easy grip finger slots makes it easy to install, remove and charge. IP67.

Charging Station (B6-CH3)

Part No. 7360033

Our Li-Ion Charger is designed to improve the efficiency of your BlokCam Batteries and the performance of the camera system.

More information, hook mounted safety system and accessories available online at **thecrosbygroup.com/blokcam**.

Copyright © 2023 The Crosby Group LLC All Rights Reserved

BLOKCAM ACCESSORIES

BlokCam Office Link (OL1)
Part No. 7370015
BlokCam Office Link allows the data from your BlokCam to be captured in a site office for site and crane monitoring and surveillance. Your host computer could monitor and download data from multiple systems.

4G Router (30184)
Part No. 7350026
With a 4G router connected to your BlokCam system you can live stream crane footage and extract recordings from anywhere in the world [2].

V-Cam (VC4)
Part No. 7370025
The Versatile-Cam is our hardwired option, which gives you the ability to expand your BlokCam system to include additional sensors. The build quality of the VC4, coupled with its non-intrusive size and mounting versatility, means it can be deployed in seconds and used in a multitude of scenarios. Ideal for visual monitoring and data logging of the hoist drum, luffing drum, slew ring, tail swing, and the operator's cab.

V-Cam (VC4a)
Part No. 7370026
The VC4a is our hardwired camera with a built in microphone, which is most commonly used for audio-visual monitoring and data logging of the operator's cab.

BlokMag (BM1)
Part No. 7370009
Attach your crane camera system to a hook block with a curved surface. Flat, spherical, cylindrical, narrow, short or tall, our modular BlokMag system allows flat surfaces to magnetically mate with curved surfaces flawlessly.

BlokLink
Part No. 7370031
Complete with hook and bow, attach your crane camera system to a crane where you cannot if the block has a curved surface. Flat, spherical, cylindrical, narrow, short or tall, our BlokLink is the solution to provide a flat surface for your BlokCam or BlokAlert.

More information, hook mounted safety system, and accessories available online at thecrosbygroup.com/blokcam.

REFERENCES

1. Subject to crane make/model
2. Subject to availability of a suitable mobile network (data charges apply)
3. Battery life varies by use and configuration
4. IP67 rating excludes IP65 audio sensor and sounder
5. Transmission distance may vary depending on the environment

*Actual product may differ from rendered image

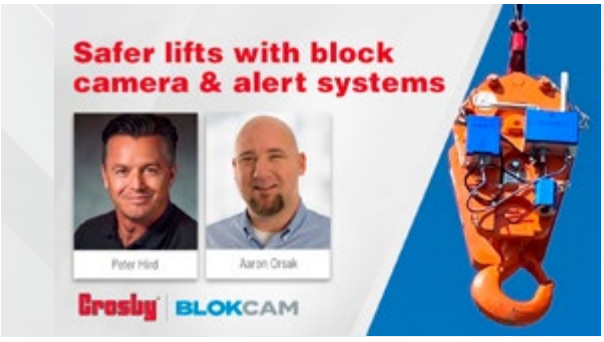

ON-DEMAND WEBINAR

Get an in-depth look at the latest Crosby BlokCam audio-visual technologies designed to improve safety and efficiency through enhanced crane operation awareness and communication.

Watch now at thecrosbygroup.com/blokcam-webinar

Copyright © 2023 The Crosby Group LLC All Rights Reserved

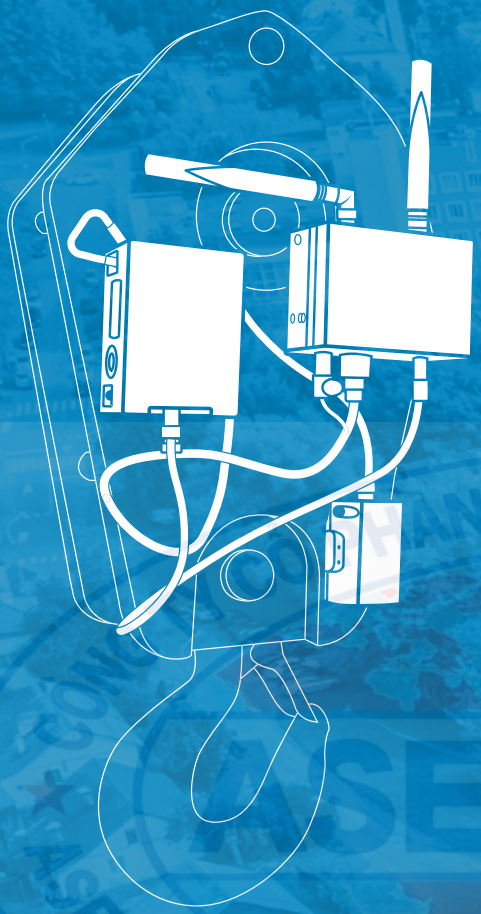

BLOKCAM

IMPROVING SAFETY, COMMUNICATION & PRODUCTIVITY

Systems and upgrades
now available to order!

BLOKCAM
BLOKCAM

Crosby | BLOKCAM

WHAT IS BLOKALERT?

BlokAlert is a wireless, audio-visual warning system that can be quickly and easily deployed to the hook block of a crane.

When activated by the lifting crew, the BlokAlert receiver gives out a recognizable audio-visual signal that can be seen and heard by site personnel in proximity to the hook block or load.

This forewarns the workforce to the position and movements of the hook block, increases awareness and reduces the risk of being struck by the crane's hook block, lifting accessories or load.

WHY BLOKALERT?

Traditionally, the distance between the horn, often located near the operator's cab, and the load is inconsistent and does not efficiently warn site personnel to the position of the hook block or load.

The same can be said for air horns or whistles when used by riggers. In both scenarios, the attention of the work force is diverted to where the sound is coming from, as opposed to the hazard.

Solution: Fit a warning system to the hook block. When activated, the consistent proximity between the hook block and the load enhances the efficiency of the warning system and draws attention to the hazard, not away from it.

HOW BLOKALERT WORKS

1a The lifting crew/rigger
The handheld fob is activated by the riggers or lifting crew. When operated, the signal is transmitted to the receiver on the hook block of the crane.

and/or

1b In the operator's cab
The transmitter is activated by a footswitch in the crane cab. When operated, the signal is transmitted to the receiver on the hook block of the crane.

2 On the hook block
On receipt of a signal from a transmitter, the Receiver is activated, alerting the workforce to the proximity of the hook block.

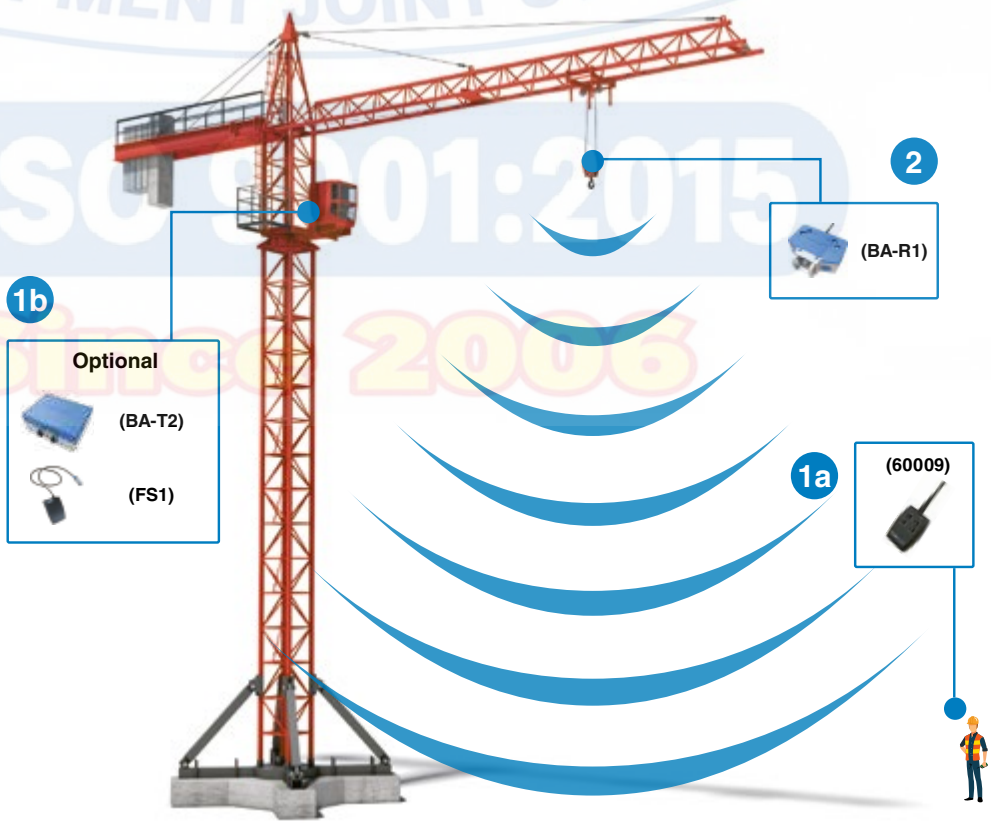

Copyright © 2023 The Crosby Group LLC All Rights Reserved

BLOKALERT SYSTEM (PART NO. 7380000)

Design Overview

- Uses high powered neodymium magnets
- Easy to install, remove, and charge
- Two handheld transmitters per system
- Easy to use, multifunction operation
- 2 x 78db – 107db electronic sounders
- 180° LED beacon
- Choice of four beacon colors
- Pair transceivers with the push of a button
- Built in Lithium Ion battery with 124-hr battery life[3]
- Built in, fold away carry handles
- Long range transmitter and receiver[5]
- Purpose built aluminum housing
- Built in lanyard anchors
- Safety lanyard provides secondary security tethering
- LED power indicator
- 3.39 inch low profile design
- Durable all-weather design, manufactured to IP67[4] rating
- -10°C to 50°C (14°F to 122°F) operating temperature
- Easy access fuse
- High quality industrial charge connector
- Optional cab transmitter
- CE and FCC approved

Modular design, compatible across a wide variety of cranes [1]

WHAT'S INCLUDED

BlokAlert Receiver (BA-R1) **Part No. 7370003**
Along with the LED Beacon, the BlokAlert Receiver is capable of up to 528 different audible warnings. This audio-visual warning system, combined with great functionality, performance and design makes this a must for all lifting operations.

Size & Weight **(excluding Antenna)**

Height:	173mm (6.82in)
Width:	210mm (8.27in)
Depth:	86mm (3.39in)
Weight:	3,400g (7.5lb)

BlokAlert Fob – 4-Button (60009) **Part No. 7360009**
The BlokAlert Fob allows the riggers to operate multiple BlokAlert systems across your site.

- Two four-button fobs per system
- Rugged design complete with neck lanyard
- Eight- and 16-button fobs available on request

BLOKALERT ACCESSORIES

BlokAlert Transmitter (BA-T2) **Part No. 7370030**
Through the use of a footswitch, the BlokAlert Transmitter gives the crane operator hand-free operation of the BlokAlert system.

BlokAlert Footswitch (FS1) **Part No. 7360017**
The Footswitch provides the hands-free operation of the BlokAlert Transmitter.
It is quick and easy to install.

More information, hook mounted safety system, and accessories available online at thecrosbygroup.com/blokcam.

Copyright © 2023 The Crosby Group LLC All Rights Reserved

BLOKALERT

Improving safety, communication & productivity

HOOKS & SWIVELS

Setting the standard for hooks with industry-changing innovations. With the most extensive product range in the industry, there's a hook for every lift.

ASEAN JSC.VN
ASEAN DEVELOPMENT JOINT STOCK COMPANY
ISO 9001:2015
Since 2006

thecrosbygroup

thecrosbygroup.com

- **Application information:** Application and warning information is available for Crosby hooks. The Crosby Warning System is designed to attract the attention of the user, clearly inform the user of the factors involved in the task, and provide the user with proper application procedures. Each Crosby hook is tagged with appropriate application and warning information, thus ensuring that the information is available at the point of application.
- **Charpy impact properties:** Crosby's Quenched & Tempered® hooks have enhanced impact properties for greater toughness at all temperatures. Crosby can provide typical Charpy impact properties on selected sizes upon special request at the time of order.
- **Fatigue properties:** Typical fatigue properties are available for selected sizes. In addition, these properties will be provided upon special request for other sizes.
- **Ductility properties:** Crosby provides results of actual test values for ductility of the material. These results are measured by reduction of area and elongation. This is done for each production lot and is traceable by the Product Identification Code (PIC).
- **Tensile strengths:** Crosby provides hardness, tensile, and yield strength for each production lot of hooks, traceable by the PIC.
- **Material analysis:** Crosby can provide certified material (mill) analysis for each production lot, traceable by the PIC. Crosby, through its own laboratory, verifies the analysis of each heat of steel. Crosby purchases only special bar forging quality steel with specific cleanliness requirements and guaranteed hardenability.
- **Field inspection:** Written instructions for visual, magnaflux, and dye penetrant inspection of hooks are available from Crosby. In addition, acceptance criteria and repair procedures for hooks are available.
- **Proof testing:** If requested at the time of order, hooks can be furnished proof tested with certification. All SHUR-LOC® hooks (clevis and eye styles) are 100% proof tested with certificates.
- **Magnetic particle certification:** If requested at the time of order, hooks can be magnetic particle inspected with certification.
- **World-class certification:** Certification to world standards can be furnished upon request at the time of order. Specific standards include American Bureau of Shipping, Lloyds Register of Shipping, Det Norske Veritas, American Petroleum Institute, RINA, Nuclear Regulatory Commission, and other worldwide standards.
- **Bronze hooks:** Crosby provides bronze shank hooks for non-sparking applications.
- **QUIC-CHECK®:** Hooks incorporate markings forged into the product which address two QUIC-CHECK features:
  Deformation Indicators: Two strategically placed marks, one just below the shank or eye and the other on the hook tip, which allows for a QUIC-CHECK measurement to determine if the throat opening has changed, thus indicating abuse or overload.
  Angle Indicators: Indicates the maximum included angle which is allowed between two sling legs in the hook. These indicators also provide the opportunity to approximate other included angles between two sling legs.
- **McKissick® Split-Nut® Hook Retention System:** Shank hooks on crane blocks must be inspected in accordance with applicable ASME B30, CSA Z150, and other crane standards. These standards mandate the crane hook to be inspected for surface indications, damage and corrosion which could compromise the integrity of the crane block. Because of the type of environment in which these hooks are required to perform, the removal of corroded nuts from the threads can become a problem during inspections. The innovative, patented system is available on Crosby shank hooks. With four easy steps, the hook can be disassembled, inspected and put back into service in a fraction of the time of a conventional threaded nut.

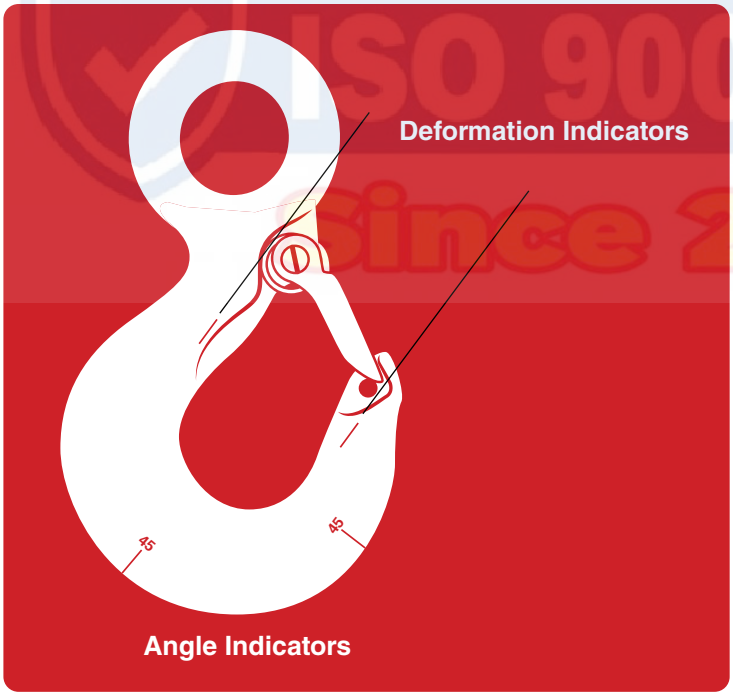

Copyright © 2023 The Crosby Group LLC All Rights Reserved

L-1327

- For use with wire rope. Suitable for use with Grade 100 and Grade 80 chain. Working load limit needs to be de-rated to achieve a 5:1 design factor.
- Forged alloy steel, Quenched & Tempered.
- Each hook has a Product Identification Code (PIC) for material traceability, along with the size and the name Crosby.
- 25% stronger than Grade 80.
- Eye Sling Hooks incorporate QUIC-CHECK® deformation and angle indicators. (For detailed information, see the Crosby Value Added page at the beginning of this section.)
- When secured with the proper cotter pin through the hole in the tip of hook, meets the intent of OSHA Rule 1926.1431(g) and 1926.1501(g) for personnel lifting.
- Individually Proof Tested to 2.5 times the Working Load Limit with certification.
- Fatigue rated to 20,000 cycles at 1.5 times the Working Load Limit.

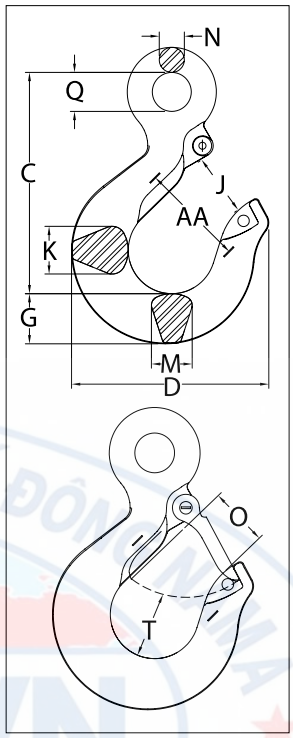

Crosby 8/10™ Fatigue Rated QUIC-CHECK® Q&T

APPLICATION AND WARNING INFORMATION
SECTION 17

L-1327 Eye Sling Hook

Grade 10 Alloy Chain Size (in)	Grade 10 Alloy Chain Size (mm)	Working Load Limit (t)	Hook ID Code	Stock No.	Weight Each (kg)	Dimensions (mm) C	D	G	J	K	M	N	O	Q	T	AA	Replacement Latch Stock No.
-	6	1.45	DA	1025860	.23	84.8	72.9	18.5	22.9	16.0	16.0	9.1	22.6	19.1	22.1	38.1	1096325
1/4-5/16	7 - 8	2.6	HA	1025869	.59	107	99.1	26.2	30.0	19.1	19.1	12.7	29.2	19.1	29.5	50.8	1096468
3/8	10	4.0	IA	1025878	1.04	127	110	30.2	38.9	30.2	25.4	14.2	35.6	23.9	31.2	63.5	1096515
1/2	13	6.8	JA	1025887	2.04	161	144	36.6	45.2	34.8	29.7	18.3	42.4	28.4	47.8	76.2	1096562
5/8	16	10.3	KA	1025896	3.81	189	172	47.8	60.5	42.2	36.6	22.4	56.1	33.3	51.6	102	1096609
3/4	18-20	16.0	KA	1025915	6.80	230	189	57.2	58.2	47.8	41.4	28.2	52.8	62.0	62.7	102	1096609
7/8	22-23	20.0	LA	1025924	9.39	256	211	65.8	63.5	55.6	49.3	32.3	57.7	72.1	66.5	102	1096657
1	26	27.1	NA	1025933	17.9	326	262	76.2	83.8	68.3	60.5	39.6	76.7	88.9	71.9	127	1096704
1 1/4	32	41.0	PA	1025942	47.6	462	357	116	108	95.3	81.0	50.8	76.2	114	98.6	178	1093717

4:1 Design Factor. *Deformation indicators.

Hook Ductility: Compare an 'as forged' hook to the superior quality of a Crosby® Quenched & Tempered® hook. Watch video at **thecrosbygroup.com/QT**

Copyright © 2023 The Crosby Group LLC All Rights Reserved

Crosby

S-319/S-319N

- The most complete line of shank marked hooks. Available 3/4 to 300 metric tons.
- Hook Identification code marked into each hook.
- All carbon and alloy hooks are quenched and tempered.
- Quenched & Tempered.
- Available in carbon steel, alloy steel, and bronze.
- Proper design, careful forging, and precision controlled quench and tempering give maximum strength without excessive weight and bulk.
- Every Crosby Shank Hook has a pre-drilled cam which can be equipped with a latch. Simply purchase the Crosby latch assemblies. Even years after the purchase of the original hook, latch assemblies can be added.
- Type Approval Certification in accordance with ABS 2016 Steel Vessels and ABS Guide for Certification on Cranes available. Certificates available when requested at time of order and may include additional charges.

QUIC-CHECK TA Q&T

APPLICATION AND WARNING INFORMATION SECTION 17

S-319 / S-319N Shank Hook

Working Load Limit (t)				Shank Hooks Stock No.					Rep. Latch Kits		
Carbon	Alloy	Bronze	Hook ID Code	Carbon S-319C S-319CN	Alloy S-319A S-319AN	Bronze S-319BN	Shank Length ‡	Weight Each (kg)	S-4320 Stock No.	PL Stock No.	SS-4055 Stock No.
0.75	1.25	.5	†D	1028505	1028701	1028900	Std.	.23	1096325	-	-
1	1.6	.6	†F	1028514	1028710	1028909	Std.	.34	1096374	-	-
1.6	2.5	1	†G	1028523	1028723	1028918	Std.	.45	1096421	-	-
2	3.2	1.4	†H	1028532	1028732	1028927	Std.	.83	1096468	-	-
3.2	5.4	2	†I	1028541	1028741	1028936	Std.	1.67	1096515	1092000	-
5	8.0	3.5	†J	1028550	1028750	1028945	Std.	3.29	1096562	1092001	-
7.5	11.5	5	†K	1028563	1028765	1028954	Std.	6.12	1096609	1092002	-
10	16	6.5	†L	1028590	1028792	1028981	Std.	9.9	1096657	1092003	-
15	22	10	†N	1028599	1028801	1028990	Std.	17.4	1096704	1092004	-
20	30	-	O	1024386	1024803	-	Std.	32.7	-	1093716	1090161
20	30	-	O	1024402	1024821	-	Long	38.8	-	1093716	1090161
25	37	-	P	1024420	1024849	-	Std.	61	-	1093717	1090189
25	37	-	P	1024448	1024867	-	Long	78	-	1093717	1090189
30	45	-	S	1024466	1024885	-	Std.	83	-	1093718	1090189
30	45	-	S	1024484	1024901	-	Long	97	-	1093718	1090189
40	60	-	T	1024509	1024929	-	Std.	122	-	1093719	1090205
40	60	-	T	1024545	1024965	-	Long	142	-	1093719	1090205
50	75	-	U	1024563	1024983	-	Std.	177	-	1093720	-
50	75	-	U	1024581	1025009	-	Long	193	-	1093720	-
-	100	-	W	-	1025027	-	Std.	277	-	1093721	-
-	100	-	W	-	1025045	-	Long	306	-	1093721	-
-	150	-	X	-	1025063	-	Std.	333	-	1093721	-
-	200	-	Y	-	1025081	-	Std.	463	-	1093723	-
-	300	-	Z	-	1025090	-	Std.	630	-	1093724	

Maximum allowable Proof Load is 2 Times Working Load Limit. All carbon hooks designed with a 5:1 design factor. All alloy hooks 1 through 22t designed with a 4.5:1 design factor. All alloy hooks 30t and larger designed with a 4:1 design factor. All bronze hooks designed with a 4:1 design factor. †New 319N style hook. ‡See column "Y" on following page for actual length.

Copyright © 2023 The Crosby Group LLC All Rights Reserved

S-319/S-319N

- Patented McKissick Split-Nut retention system available.
- Hooks incorporate QUIC-CHECK® deformation and angle indicators. (For detailed information, see the Crosby Value Added page at the beginning of this section.)
- Chemical analysis and tensile tests performed on each PIC to verify chemistry and mechanical properties.

APPLICATION AND WARNING INFORMATION
SECTION 17

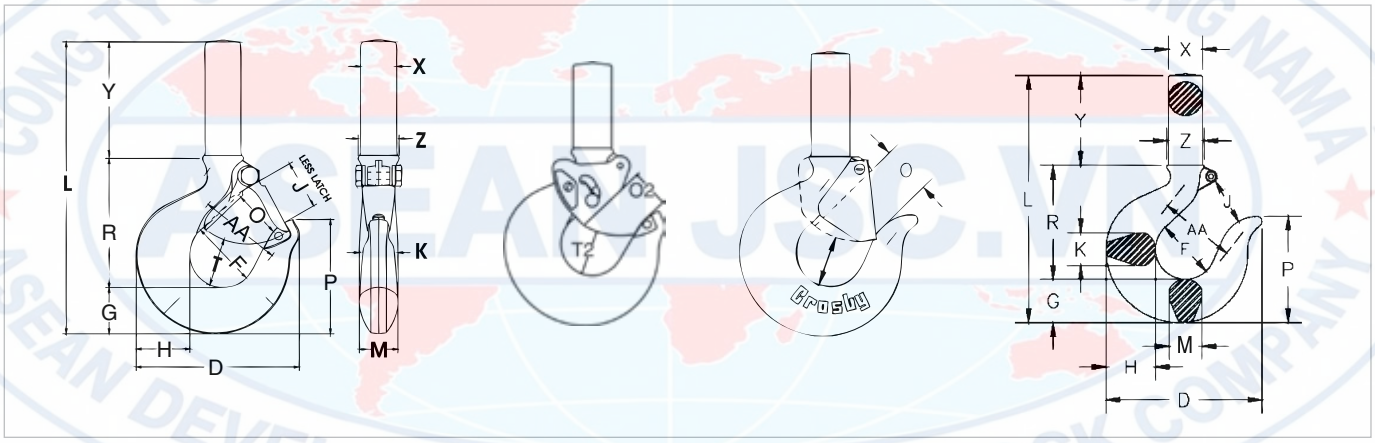

S-319 / S-319N Shank Hook

Hook ID Code	Dimensions (mm)																	
	D	F	G	H	J	K	L	M	O	O2 ††	P	R	T	T2 ††	X	Y	Z	AA*
†D	72.5	31.8	18.5	20.6	23.6	16.0	131	16.0	†23.6	-	49.8	59.5	24.6	-	15.0	52.5	17.5	38.1
†F	80.5	35.1	21.3	23.9	24.6	18.0	144	18.0	†24.6	-	56.5	66.0	24.6	-	19.3	57.0	19.8	50.8
†G	91.0	38.1	25.4	29.5	26.9	22.4	161	22.4	†26.9	-	62.0	70.0	26.2	-	18.3	66.0	22.4	50.8
†H	102	41.1	29.0	33.3	30.2	23.9	181	23.9	†29.5	-	70.5	80.5	29.5	-	22.4	72.0	25.4	50.8
†I	123	51.0	36.6	41.4	38.1	33.3	219	28.7	†34.5	25.4	88.0	98.0	38.9	38.1	29.5	87.5	31.8	63.5
†J	160	63.5	46.2	52.5	45.2	42.2	265	36.6	40.9	33.3	117	121	49.3	47.8	35.8	97.5	39.6	76.2
†K	192	76.0	57.5	67.0	61.0	47.8	318	41.4	53.0	46.0	133	149	62.5	57.2	46.0	111	49.3	101
†L	212	82.5	66.0	74.5	66.5	55.5	409	49.3	57.5	51.0	151	162	66.0	58.7	51.0	178	55.5	101
†N	263	108	76.5	89.0	86.5	68.5	461	60.5	76.5	69.9	175	207	71.5	65.0	65.0	178	67.0	127
O	346	127	92.0	117	102	76.0	586	76.0	82.5	-	223	240	87.5	-	79.0	254	79.0	165
O	346	127	92.0	117	102	76.0	790	76.0	82.5	-	223	240	87.5	-	79.0	457	79.0	165
P	357	137	116	127	108	92.0	816	76.0	76.0	-	287	318	98.5	-	102	381	102	177
P	357	137	116	127	108	92.0	1044	76.0	76.0	-	287	318	98.5	-	102	610	102	177
S	392	152	129	140	121	94.5	867	82.5	86.0	-	319	356	121	-	106	381	106	203
S	392	152	129	140	121	94.5	1095	82.5	86.0	-	319	356	121	-	106	610	106	203
T	470	178	152	165	146	113	916	99.5	105	-	375	395	145	-	114	368	114	254
T	470	178	152	165	146	113	1208	99.5	105	-	375	395	145	-	114	660	114	254
U	524	197	170	184	165	133	1045	108	124	-	420	492	152	-	127	381	127	292
U	524	197	170	184	165	133	1249	108	124	-	420	492	152	-	127	584	127	292
W	584	173	218	251	149	140	1070	140	114	-	438	468	178	-	178	381	178	305
W	584	173	218	251	149	140	1222	140	114	-	438	468	178	-	178	533	178	305
X	619	171	232	278	152	152	1162	152	114	-	457	467	178	-	184	457	184	330
Y	678	191	248	300	168	178	1283	178	127	-	502	521	203	-	203	508	203	330
Z	765	241	270	329	203	184	1389	203	159	-	576	597	210	-	241	508	241	381

Rough as-forged dimension. Shank will not machine to this dimension. Please refer to the warnings & applications section for recommended shank diameter when machining.
*Deformation indicators. †3/4t carbon through 22t alloy dimensions shown are for S-4320 Latch Kits. Dimensions for "O" frame size and larger are for PL Latch Kits. ††Dimensions are for PL-N latch kits. For the purpose of calculating D/d ratio, utilize dimension M.

Copyright © 2023 The Crosby Group LLC All Rights Reserved

L-320CN
Frame Size D-N

- Available in carbon steel and alloy steel.
- Eye hooks are load rated (marked with the Working Load Limit).
- Fatigue rated to 20,000 cycles at 1.5 times the Working Load Limit.
- Chemical analysis and tensile tests performed on each PIC to verify chemistry and mechanical properties.
- Hooks incorporate QUIC-CHECK® deformation and angle indicators. (For detailed information, see the Crosby Value Added page at the beginning of this section.)

L-320C
Frame Size O-T

APPLICATION AND WARNING INFORMATION
SECTION 17

L-320N / L-320 Eye Hooks

Working Load Limit (t)		Eye Hook Stock No.					Replacement Latch Kits		
Carbon	Alloy	Hook ID Code	Carbon L-320C L-320CN S.C.	Carbon GL-320CN Galv.	Alloy L-320A L-320AN S.C.	Weight Each (kg)	S-4320 Stock No.	PL Stock No.	SS-4055 Stock No.
0.75	1.25	†D	1022205	1022208	1022380	.28	1096325	-	-
1	1.6	†F	1022216	1022219	1022391	.40	1096374	-	-
1.6	2.5	†G	1022227	1022230	1022402	.65	1096421	-	-
2	3.2	†H	1022238	1022241	1022413	.94	1096468	-	-
3.2	5.4	†I	1022246	1022249	1022424	1.95	1096515	1092000	-
5	8.0	†J	1022260	1022262	1022435	3.76	1096562	1092001	-
7.5	11.5	†K	1022271	1022274	1022446	6.80	1096609	1092002	-
10	16	†L	1022282	1022285	1022457	9.42	1096657	1092003	-
15	22	†N	1022293	1022296	1022468	17.9	1096704	1092004	-
20	31.5	O	1022302	-	1022477	27.2	-	1093716	1090161
25	37	P	1023306	-	1023565	47.6	-	1093717	1090189
30	45	S	1023324	-	1023583	67	-	1093718	1090189
40	60	T	1023342	-	1023609	103	-	1093719	1090205

All carbon hooks have a 5:1 Design Factor. Alloy eye hooks 1t through 22t have a 5:1 Design Factor. Alloy eye hooks 30t through 60t have a 4.5:1 Design Factor. For 3/4t carbon through 22t alloy eye hooks, Proof Load is 2.5 times Working Load Limit. For 20t carbon through 60t alloy eye hooks, Proof Load is 2 times Working Load Limit.

Copyright © 2023 The Crosby Group LLC All Rights Reserved

L-320AN
Frame Size D-N

L-320AN
Frame Size O-T

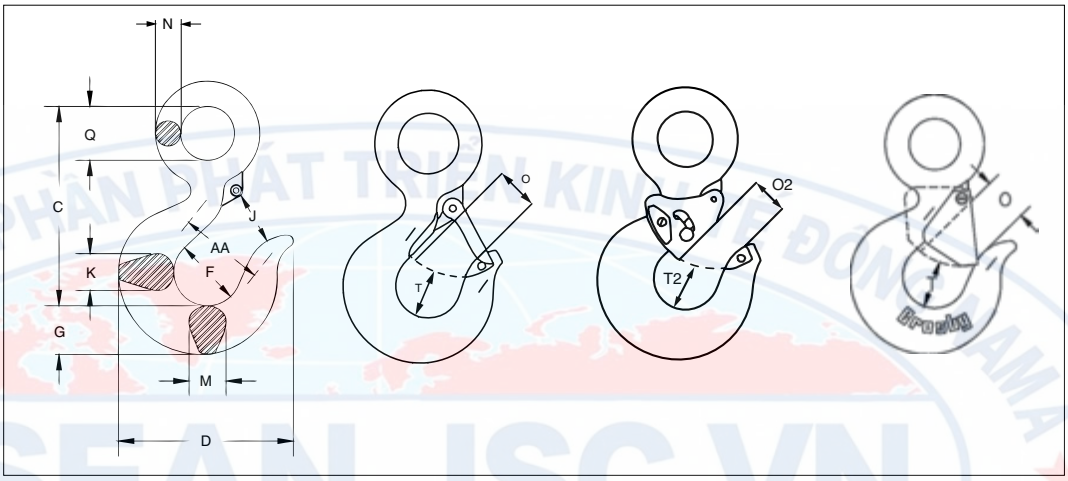

Load Rated Fatigue Rated TA QUIC-CHECK Q&T APPLICATION AND WARNING INFORMATION SECTION 17

L-320N / L-320 Eye Hooks

Hook ID Code*	Dimensions (mm)													
	C	D	F	G	J	K	M	N	O †	O2 ††	Q	T †	T2 ††	AA**
†D	85	72.0	31.8	18.5	22.9	16.0	16.0	9.14	22.6	-	19.1	22.1	-	38.1
†F	97	79.0	35.1	21.3	23.6	18.0	18.0	10.7	23.1	-	23.1	24.9	-	50.8
†G	105	89.5	38.1	25.4	25.4	22.4	22.4	14.0	25.4	-	28.7	26.2	-	50.8
†H	119	101	41.4	28.7	28.7	23.9	23.8	14.7	27.7	-	31.8	29.5	-	50.8
†I	147	122	51.0	36.6	37.3	33.3	33.3	18.3	34.5	25.4	39.6	38.9	38.1	63.5
†J	187	159	63.5	46.0	44.5	42.2	42.2	22.9	40.9	33.3	51.0	49.8	47.7	76.2
†K	230	189	76.0	57.0	58.0	47.8	41.4	28.2	53.0	46.0	62.0	62.5	57.2	102
†L	256	211	82.5	66.0	63.5	55.5	49.3	32.3	57.5	51.0	72.0	66.5	58.7	102
†N	318	262	108	76.0	84.0	68.5	60.5	39.6	76.5	69.8	89.0	72.0	65.0	127
O	357	346	127	92.0	102	76.0	76.2	44.5	82.5	-	89.0	87.5	-	165
P	462	357	137	116	108	95.2	81.0	51.0	76.0	-	114	98.5	-	178
S	511	392	152	129	121	114	82.6	55.4	86.0	-	125	121	-	203
T	602	470	178	152	146	140	99.3	64.3	105	-	145	145	-	254

*Deformation indicators. †3/4t carbon though 22t alloy dimensions shown are for S-4320 Latch Kits. Dimensions for "O" frame size and larger are for PL Latch Kits.
††Dimensions are for PL-N latch kits.

Copyright © 2023 The Crosby Group LLC All Rights Reserved

Crosby

L-322CN / L-322AN

- Forged, Quenched & Tempered.
- Suitable for positioning of the hook before the load is lifted.
- Swivel hooks are load rated.
- Proper design, careful forging, and precision controlled quench and tempering gives maximum strength without excessive weight and bulk.
- Low profile hook tip designed to utilize Crosby S-4320 or PL-N latch kit.
- Hooks incorporate QUIC-CHECK® deformation and angle indicators. (For detailed information, see the Crosby Value Added page at the beginning of this section.)

Use in corrosive environment requires shank and nut inspection in accordance with ASME B30.10-1.10.4(b)(5)(c).

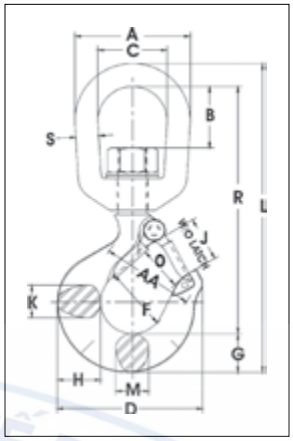

Load Rated Fatigue Rated TA QUIC-CHECK Q&T

APPLICATION AND WARNING INFORMATION
SECTION 17

L-322CN / L-322AN Swivel Hooks with Latch

Working Load Limit (t)		Hook ID Code*	L-322CN Stock No.	L-322AN Stock No.	Weight Each (kg)	Dimensions (mm)															Rep. Latch Stock No.
Carbon	Alloy					A	B	C	D	F	G	H	J	K	L	M	O †	R	S	AA*	
0.75	1.25	D	1048603	1048807	.34	51.0	20.8	31.8	72.5	31.8	18.5	20.6	23.6	16.0	144	16.0	23.6	116	9.65	38.1	1096325
1	1.6	F	1048612	1048816	.57	63.5	33.3	38.1	80.0	35.1	21.3	23.9	24.6	18.0	170	18.0	24.6	136	12.7	50.8	1096374
1.6	2.5	G	1048621	1048825	1.02	76.0	38.1	44.5	91.0	38.1	25.4	29.5	26.9	22.4	197	22.4	26.9	155	16.0	50.8	1096421
2	3.2	H	1048630	1048834	1.04	76.0	38.1	44.5	102	41.1	28.7	33.3	30.2	23.9	210	23.9	29.5	165	16.0	50.8	1096468
3.2	5.4	I	1048639	1048840	2.25	89.0	41.7	50.8	123	51.0	36.6	41.4	38.1	33.3	246	28.7	35.8	191	19.1	63.5	1096515
5	8.0	J	1048648	1048859	4.67	116	58.0	63.5	160	63.5	46.0	52.5	45.2	42.2	317	36.6	42.9	245	25.4	76.2	1096562
7.5	11.5	K	1048657	1048868	8.80	127	62.0	70.0	192	76.0	57.0	67.0	51.0	47.8	375	41.4	56.5	289	28.7	101	1096609
10	16	L	1048666	1048880	10.5	143	63.0	79.0	212	82.5	66.0	74.5	66.5	55.5	417	49.3	61.0	311	31.8	101	1096657
15	22	N	1048675	1048889	21.3	180	95.5	104	263	108	76.0	89.0	86.5	68.5	542	60.5	81.0	424	38.1	127	1096704
-	31.5	O	-	1048898	32.0	180	95.5	104	346	127	93.0	118	102	72.5	590	76.2	82.6	459	38.1	165	1090161

All carbon swivel hooks have a 5:1 Design Factor and Proof Load is 2 times the Working Load Limit. Alloy swivel hooks 1t through 22t have a 4.5:1 Design Factor and Proof Load is 2.5 times the Working Load Limit. Alloy swivel hooks of 30t capacity have a 4:1 Design Factor and Proof Load is 2 times the Working Load Limit. *Deformation indicators †Dimensions for hooks 3/4t carbon through 22t alloy are for S-4320 latch kits. Dimensions for hooks 30t alloy are for 4055 latch kit.

CÔNG TY CỔ PHẦN PHÁT TRIỂN KINH TẾ ĐỒNG THÁI BÌNH DƯƠNG
ISO 9001:2015
Since 2006

Copyright © 2023 The Crosby Group LLC All Rights Reserved

L-3322B

- Bearing design allows hook to rotate freely under load.
- Capacities ranging from 2 through 15 metric tons.
- Forged, Quenched & Tempered.
- Low profile hook tip designed to utilize Crosby S-4320 or PL-N latch kit.
- L-3322 hooks incorporate QUIC-CHECK® deformation and angle indicators. (For detailed information, see the Crosby Value Added page at the beginning of this section.)

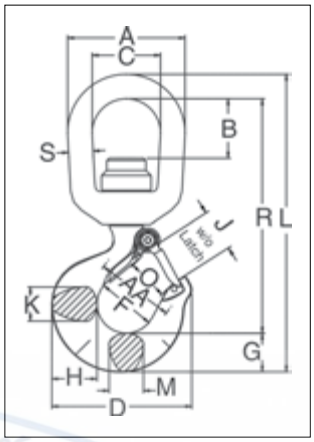

QUIC-CHECK®

APPLICATION AND WARNING INFORMATION
SECTION 17

L-3322B Swivel Hooks with Bearing

Working Load Limit (t)	Hook ID Code*	Stock No.	Weight Each (kg)	Dimensions (mm) A	B	C	D	F	G	H	J	K	L	M	O	R	S	AA*	Rep. Latch Stock No.
2	GA	1028609	1.13	76.2	38.1	44.5	91.2	38.1	25.4	29.5	26.9	22.4	194	22.4	25.4	152	16.0	50.8	1096421
3	HA	1028618	1.72	88.9	39.6	50.8	101	41.1	28.7	33.3	30.2	23.9	218	23.9	27.7	170	19.1	50.8	1096468
5	IA	1028627	3.17	101	39.6	57.2	122	50.8	36.6	41.4	38.1	33.3	262	28.7	34.5	203	22.4	63.5	1096515
7	JA	1028636	6.35	127	49.3	69.9	159	63.5	46.0	52.3	45.2	42.2	326	36.6	40.9	251	28.7	76.2	1096562
11	KA	1028645	10.1	142	52.1	79.2	191	76.2	57.2	66.8	61.2	47.8	387	41.4	52.8	298	31.8	101	1096609
15	LA	1028654	16.3	180	91.9	104	211	82.6	65.8	74.7	66.5	55.6	473	49.3	57.7	366	38.1	101	1096657

4.5:1 Design Factor. Maximum allowable proof load is 2.5 times Working Load Limit. *Deformation indicators.

CÔNG TY CỔ PHẦN PHÁT TRIỂN KINH TẾ ĐẠI DƯƠNG NAMA
ASEAN ISC VN
ASEAN DEVELOPMENT JOINT STOCK COMPANY
ISO 9001:2015
Since 2006

Ep. 21 Grinding and wear allowance on rigging hardware

VIDEO PODCAST SERIES

Our experts answer some of your most common safe rigging, lifting, and securement questions in our video podcast series, *Ask the Expert*.

Watch all episodes and submit your questions at thecrosbygroup.com/podcast, and subscribe to our YouTube channel to catch every new video as soon as it's released.

Ep. 31 Crosby Shurloc® Hook inspection requirements

Ep. 5 Hooks: Why the tips must point outward on multiple bridles

Ask the Expert
VIDEO PODCAST

Copyright © 2023 The Crosby Group LLC All Rights Reserved

Crosby

S-1316

S-1318A

- All SHUR-LOC® hooks have the following features:
  - Forged alloy steel, Quenched & Tempered.
  - Recessed trigger design is flush with the hook body, protecting the trigger from potential damage.
  - Easy to operate with enlarged thumb access.
  - Positive lock latch is self-locking when the hook is loaded.
  - The SHUR-LOC® hook, if properly installed and locked, can be used for personnel lifting applications and meets the intent of OSHA Rule 1926.1431(g)(1)(i)(A) and 1926.1501(g)(4)(iv)(B).
  - Fatigue rated to 20,000 cycles at 1-1/2 times the Working Load Limit.
  - Contact Engineered Solutions for additional threading or Split-Nut options at thecrosbygroup.com/engineeredsolutions.
- Eye Style incorporates these added features:
  - Individually Proof Tested to 2-1/2 times the chain Working Load Limit with certification.
  - S-1316 meets the performance requirements of EN1677-3.
  - Suitable for use with Grade 100 and Grade 80 chain.
  - Designed with 'engineered flat' to connect to S-1325 chain coupler.

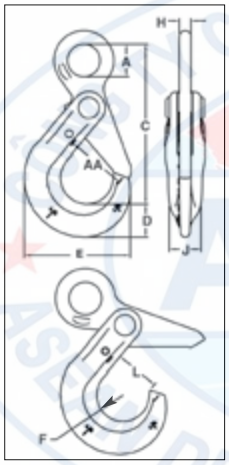

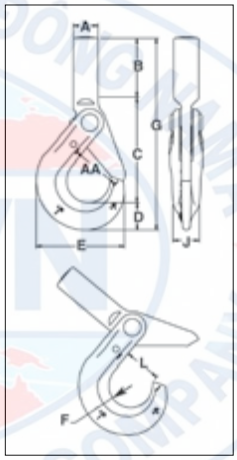

Crosby 8/10™ Fatigue Rated Q&T CE

APPLICATION AND WARNING INFORMATION
SECTION 17

S-1316 SHUR-LOC® Eye Hook with Positive Locking Latch

Chain Size (in)	Chain Size (mm)	Stock No.	Frame code	Grade 10 Alloy Chain Working Load Limit (t) 4:1	Working Load Limit (t) 5:1	Weight Each (kg)	Dimensions (mm) A	C	D	E	F	H	J	L	AA*
-	6	1022896	D	1.45	1.00	.39	19.8	100	20.1	66.0	17.0	7.87	16.0	29.5	38.1
1/4-5/16	7-8	1022914	G	2.60	1.90	.82	27.4	135	27.9	88.9	22.1	9.91	20.6	37.6	51.0
3/8	10	1022923	H	4.00	2.50	1.54	33.0	167	29.7	112	27.9	12.9	23.9	46.5	63.5
1/2	13	1022932	I	6.80	5.62	2.72	41.9	209	42.4	139	32.0	17.0	29.5	56.4	76.2
5/8	16	1022941	J	10.30	7.53	6.83	55.9	256	51.8	167	38.1	22.1	38.1	67.3	89.0
3/4	18-20	1022952	-	16.00	9.98	8.61	64.0	274	56.4	197	51.1	22.1	51.6	89.4	-
7/8	22	1022943	-	20.00	12.0	12.7	72.9	317	62.2	222	57.7	24.9	55.9	97.3	-
1	26	1022944	-	27.10	-	22.45	80.0	371	81.5	251	62.5	32.0	68.1	104	-

*Deformation indicators.

S-1318A SHUR-LOC® Shank Hook

Chain Size (in)	Chain Size (mm)	Stock No.	Frame code	Grade 10 Alloy Chain Working Load Limit (t)	Dimensions (mm) A†	B	C	D	E	F	G	J	L	AA*	Weight Each (kg)
-	6	1098200	D	1.45	20.1	55.0	84.0	20.1	66.0	17.0	159	16.0	28.7	38.1	.45
1/4-5/16	7-8	1098209	G	2.60	25.4	61.0	106	27.9	89.0	22.1	195	20.6	35.1	51.0	.90
3/8	10	1098218	H	4.00	29.0	75.0	131	29.7	112	27.9	235	23.9	46.5	63.5	1.61
1/2	13	1098227	I	7	34.0	85.0	160	42.4	138	32.0	288	29.5	53.5	76.2	3.18

4:1 Design Factor based on Grade 100 chain. *Deformation indicators. †Dimension before machining (as forged).

Copyright © 2023 The Crosby Group LLC All Rights Reserved

S-1326

S-13326

- The S-1326 hook is a positioning device and is not intended to rotate under load. For swivel hook designed to rotate under load, use the S-13326.
- S-13326 Swivel Hook utilizes anti-friction bearing design which allows hook to rotate freely under load.
- Rated for both wire rope and for use with Grade 80/100 chain.
- Forged alloy steel, Quenched & Tempered.
- Individually Proof Tested at 2-1/2 times the chain Working Load Limit with certification.
- Recessed trigger design is flush with the hook body, protecting the trigger from potential damage.
- Easy to operate with enlarged thumb access.
- Positive lock latch is self-locking when hook is loaded.
- Trigger repair kit available (S-4316). Consists of spring, roll pin, and trigger.
- Fatigue rated to 20,000 cycles at 1-1/2 times the Working Load Limit.
- The SHUR-LOC® Hook, if properly installed and locked, can be used for personnel lifting applications and meets the intent of OSHA Rule 1926.1431(g)(1)(i)(A) and 1926.1501(g)(4)(iv)(B).

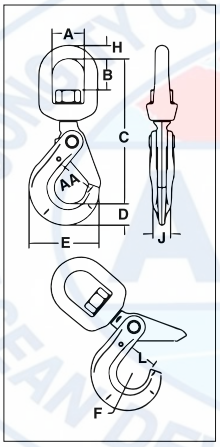

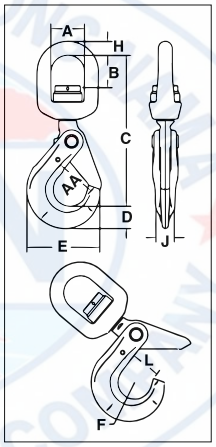

APPLICATION AND WARNING INFORMATION
SECTION 17

S-1326 SHUR-LOC® Swivel Hooks Suitable for positioning before lifting.

Chain Size (in)	Chain Size (mm)	Frame code	Grade 10 Alloy Chain Working Load Limit (t) 4:1 Design Factor	Working Load Limit (t) 5:1 Design Factor	Stock No.	Weight Each (kg)	Dimensions (mm) A	B	C	D	E	F	H	J	L	AA*
-	6	D	1.45	1.16	1004304	.57	38.1	33.5	156	20.1	66.0	17.0	12.7	16.0	28.7	38.1
1/4 - 5/16	7-8	G	2.60	2.1	1004313	1.18	44.5	40.4	193	27.9	88.9	22.1	16.0	20.6	35.1	51.0
3/8	10	H	4.00	3.2	1004322	2.13	50.8	43.9	224	29.7	112	27.9	19.1	23.9	44.5	63.5
1/2	13	I	6.80	5.4	1004331	3.92	63.5	60.5	284	42.4	139	32.0	25.4	29.5	53.6	76.2
5/8	16	-	10.3	8.2	1004340	7.71	69.9	64.3	328	51.8	167	38.1	28.7	38.1	63.2	89.0
3/4	18 - 20	-	16.0	12.8	1004349	10.9	71.9	64.0	358	56.4	197	51.1	27.9	51.6	89.4	127
7/8	22	-	20.0	16.0	1004358	13.2	87.4	81.0	417	62.2	222	57.4	33.0	55.9	97.3	152

*Deformation indicators.

S-13326 SHUR-LOC® Swivel Hooks with Bearing Suitable for frequent rotation under load.

Chain Size (in)	Chain Size (mm)	Frame code	Grade 10 Alloy Chain Working Load Limit (t) 4:1 Design Factor	Working Load Limit (t) 5:1 Design Factor	Stock No.	Weight Each (kg)	Dimensions (mm) A	B	C	D	E	F	H	J	L	AA*
-	6	D	1.45	1.16	1004404	.57	38.1	29.0	157	20.1	66.0	17.0	12.7	16.0	28.7	38.1
1/4 - 5/16	7-8	G	2.60	2.1	1004413	1.18	44.5	38.6	192	27.9	89.0	22.1	16.0	20.6	35.1	51.0
3/8	10	H	4.00	3.2	1004422	2.13	51.0	40.9	226	29.7	112	27.9	19.1	23.9	46.5	63.5
1/2	13	I	6.80	5.4	1004431	3.92	63.5	51.6	282	42.4	138	32.0	25.4	29.5	53.5	76.2
5/8	16	-	10.3	8.2	1004440	7.71	70.0	50.3	328	52.0	167	38.1	28.7	38.1	63.0	89.0

*Deformation indicators.

Copyright © 2023 The Crosby Group LLC All Rights Reserved

Crosby

S-13326H

- The SHUR-LOC® Handle Hook allows the user to get a confident grip on a load with ease and comfort.
- Designed with a handle opening big enough to comfortably fit a gloved hand.
- Positive lock latch is self-locking when hook is loaded.
- Rated for both wire rope and use with Grade 80/100 chain.
- S-13326H Swivel Hook utilizes anti-friction bearing design which allows hook to rotate freely under load.
- Individually Proof Tested at 2-1/2 times the chain Working Load Limit with certification.
- The replaceable pull-trigger allows the user to easily open the SHUR-LOC's positive self-locking latch.
  - Ergonomically designed for easy use and precise control.
  - Secondary side trigger is recessed to avoid inadvertent release.
- Fatigue rated to 20,000 cycles at 1-1/2 times the Working Load Limit.
- Forged alloy steel, Quenched & Tempered.
- The SHUR-LOC® hook, if properly installed and locked, can be used for personnel lifting applications and meets the intent of OSHA Rule 1926.1431(g)(1)(i)(A) and 1926.1501(g)(4)(iv)(B).

S-1316AH

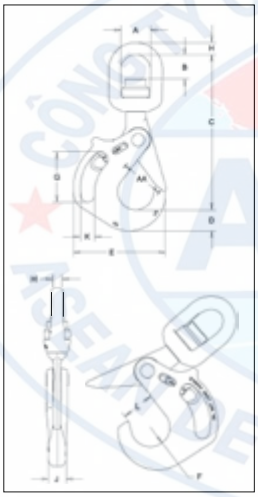

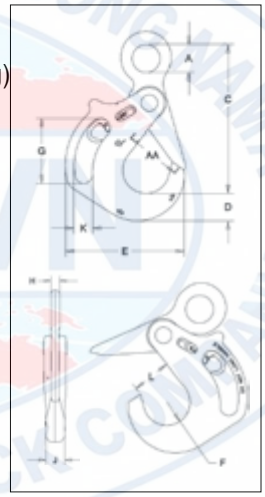

APPLICATION AND WARNING INFORMATION
SECTION 17

S-13326H SHUR-LOC® Handle Swivel Hooks with Bearings

Chain Size (in)	Chain Size (mm)	Grade 10 Alloy Chain Working Load Limit (t) 4:1*	Working Load Limit (t) 5:1*	Frame Code	Stock No.	Weight Each (kg)	Dimensions (mm) A	B	C	D	E	F	G	H	J	K	L	AA*
5/8	16	10.3	8.2	JA	1005014	11.8	69.9	57.2	272	50	217	42.5	119	28.7	44	33.5	71	102
3/4	18/20	16.0	12.8	KA	1005023	16.8	79.2	51.9	393	66	255	50.5	120	31.8	52	32	84	127
7/8	22	19.4	15.5	LA	1005041	25.9	104	92.7	482	69	292	57	136	41.4	62	40	93	152
1	26	27.1	21.7	NA	1005050	38.1	127	102	547	79	324	64	164	41.4	70	40	104	165

4:1 Design Factor. *Deformation indicators.

S-1316AH SHUR-LOC® Handle Eye Hook

Chain Size (in)	Chain Size (mm)	Grade 10 Alloy Chain Working Load Limit (t) 4:1*	Working Load Limit (t) 5:1*	Frame Code	Stock No.	Weight Each (kg)	Dimensions (mm) A	B	C	D	E	F	G	H	J	K	L	AA*
5/8	16	10.3	8.2	JA	1023579	8.2	51	10.69	272	50	217	42.5	119	20	44	33.5	71	102
3/4	18/20	16.0	12.8	KA	1023599	12.7	70	12.03	306	66	255	50.5	120	22	52	32	84	127
7/8	22	19.4	15.5	LA	1023607	17.7	80	13.46	342	69	292	57	136	91	62	40	93	152
1	26	27.1	21.7	NA	1023625	27.2	90	15.55	395	79	324	64	164	30	70	40	104	165

4:1 Design Factor. *Deformation indicators.

Copyright © 2023 The Crosby Group LLC All Rights Reserved

S-4320
Replacement Latch Kit

- Heavy duty stamped latch interlocks with the hook tip.
- High cycle, long life spring.
- Can be made into a "Positive Locking" Hook when proper cotter pin is utilized.
- Latch kits shipped unassembled and individually packaged with instructions.
- Meets the intent of OSHA Rule 1926.1431(g) and 1926.1501(g)(when secured with the bolt, nut and pin) for lifting personnel.

IMPORTANT: The new S-4320 Latch Kit will not fit the old style 319, 320 and 322 hooks.

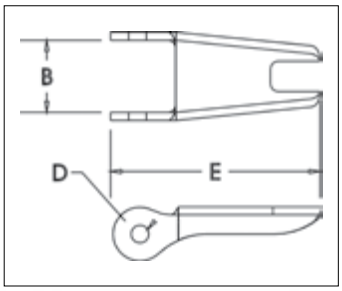

APPLICATION AND WARNING INFORMATION
SECTION 17

S-4320 Replacement Latch Kit for 319N, 320N, 322N, 339N, 1327 and 1339 Hooks

Hook Size (t)			Hook ID Code	Stock No.	Weight Each (kg)	Dimensions (mm)		
Carbon	Alloy	Bronze				B	D	E
3/4	1	.5	D	1096325	.01	12.7	3.80	36.6
1	1-1/2	.6	F	1096374	.02	13.7	4.30	39.6
1-1/2	2	1	G	1096421	.02	16.0	4.30	42.2
2	3	1.4	H	1096468	.03	16.8	4.30	48.5
3	5	2	I	1096515	.05	21.1	5.10	58.5
5	7	3.5	J	1096562	.07	26.4	5.10	73.2
7-1/2	11	5	K	1096609	.13	31.8	6.85	90.5
10	15	6.5	L	1096657	.15	34.3	6.85	97.0
15	22	10	N	1096704	.38	42.2	9.90	132

Example of Hook ID Placement Location

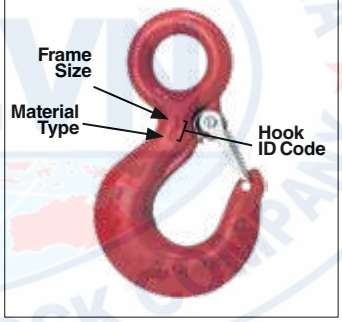

Copyright © 2023 The Crosby Group LLC All Rights Reserved

PL
Latch Kits

LATCH ORDERING INSTRUCTIONS

Specify PL, PL-N or PL-O latch kit stock number from charts below.
Specify capacity of hook to which latch will be assembled.
Specify hook material (carbon or alloy).

- Hot-dip galvanized.
- Heavy duty latch with easy operating features.
- Flapper lever indicates locked or unlocked position.
- Assembly instructions included with each latch.
- For additional dimensional data on eye, shank or swivel hooks, see Warnings & Applications.
- Meets the intent of OSHA Rule 1926.1431(g) and 1926.1501(g) (when secured with the bolt, nut and pin) for lifting personnel.

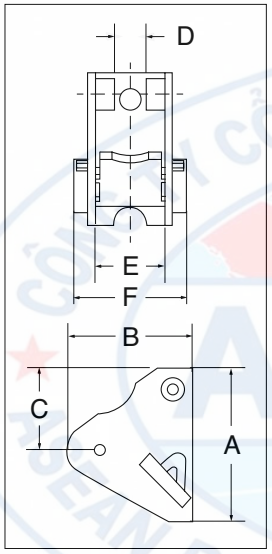

APPLICATION AND WARNING INFORMATION
SECTION 17

PL LATCH KITS

Hook Size (t)		Hook ID Code	Stock No.	Weight Each (kg)	Dimensions (mm)					
Carbon	Alloy				A	B	C	D	E	F
3	4-1/2	I	1093711	.24	68.3	60.7	52.6	16.0	28.7	49.5
5	7	J	1093712	.30	76.0	63.2	51.0	16.0	35.1	55.9
7-1/2	11	K	1093713	.45	92.0	62.5	60.5	16.0	41.4	63.2
10	15	L	1093714	.57	102	83.1	68.5	16.0	47.8	82.6
15	22	N	1093715	1.34	135	106	74.0	21.3	60.5	88.6
20	30	O	1093716	1.84	152	115	83.3	26.9	84.1	119
25	37	P	1093717	3.91	178	174	126	57.0	60.5	155
30	45	S	1093718	4.54	171	183	100	57.0	121	162
40	60	T	1093719	6.49	203	202	108	88.0	151	196
50	75	U	1093720	12.2	251	213	149	86.0	165	226
-	100-150	W - X	1093721	15.1	276	276	165	86.0	200	254
-	200	Y	1093723	20.4	302	284	162	86.0	222	286
-	300	Z	1093724	24.9	318	315	201	86.0	254	311

PL-N/O
Latch Kits

LATCH ORDERING INSTRUCTIONS

Specify PL, PL-N or PL-O latch kit stock number from charts below.
Specify capacity of hook to which latch will be assembled.
Specify hook material (carbon or alloy).

- Heavy duty latch with easy operating features.
- PL-N designed for Crosby 319N & 320N style hooks, PL-O designed for Crosby 319 & 320 old style hooks.
- Flapper lever indicates locked or unlocked position.
- Assembly instructions included with each latch.
- For additional dimensional data on eye, shank or swivel hooks refer to the specific product page in this section.
- Meets the intent of OSHA Rule 1926.1431(g) and 1926.1501(g) (when secured with the supplied toggle pin) for lifting personnel.

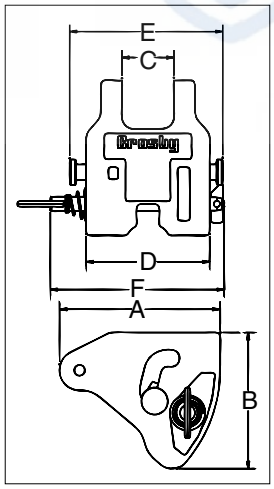

APPLICATION AND WARNING INFORMATION
SECTION 17

PL-N/O LATCH KITS

Hook Size (t)		Hook ID Code	PL-N Latch Kit Stock No.	PL-O Latch Kit Stock No.	Weight Each (kg)	Dimensions (mm)					
Carbon	Alloy					A	B	C	D	E	F
3	4.5 / 5 *	I	1092000	1091900	.36	60.9	51.0	21.1	54.1	68.8	87.4
5	7	J	1092001	1091901	.58	74.7	63.5	25.4	64.0	81.0	97.3
7-1/2	11	K	1092002	1091902	.90	92.2	76.7	30.2	69.9	87.4	111
10	15	L	1092003	1091903	1.27	102	86.1	34.0	81.0	102	114
15	22	N	1092004	1091904	2.22	132	110	40.9	98.0	122	130

*"N" style hooks are rated at 5 metric tons.

Copyright © 2023 The Crosby Group LLC All Rights Reserved

SS-4055
Latch Kits

LATCH ORDERING INSTRUCTIONS

Specify latch kit stock number.
Specify capacity of hook to which latch will be assembled.
Specify hook material (carbon or alloy).

- Stainless steel construction with cadmium plated steel nuts.
- Shipped packaged and unassembled.
- Instructions included for easy field assembly.

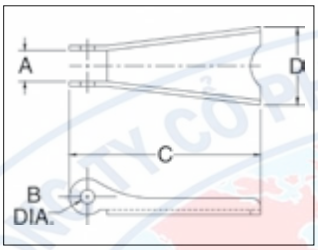

SS-4055 LATCH KITS

Hook Size (t)			Hook ID Code	Stock No.	Weight Each (kg)	Dimensions (mm)			
Carbon	Alloy	Bronze				A	B	C	D
3/4	1	.5	D	1090027	.01	9.65	4.05	36.6	15.0
1	1-1/2	.6	F	1090045	.01	9.65	4.05	40.6	15.0
1-1/2 - 2	2 - 3	1.0 - 1.4	G / H	1090063	.01	11.9	4.85	46.7	20.8
3	4-1/2	2.0	I	1090081	.05	14.2	4.30	61.0	25.4
5	7	3.5	J	1090107	.05	14.7	5.10	75.5	30.7
7-1/2 - 10	11 - 15	5.0 - 6.5	K / L	1090125	.08	15.0	6.86	93.0	38.1
15	22	10.0	N	1090143	.18	21.1	9.90	125	48.3
20	30	-	O	1090161	.29	23.9	13.2	149	65.0
25 - 30	37 - 45	-	P / S	1090189	.51	55.5	9.90	165	97.5
40	60	-	T	1090205	.80	84.0	13.2	200	105

S-4088
Alloy Hook Latch Kits

LATCH ORDERING INSTRUCTIONS

Specify latch kit stock number.
Specify capacity of hook to which latch will be assembled.
Specify hook material (carbon or alloy).

- To be used on A-327 and A-339 Grade 8 sling hooks.
- Latch kits shipped unassembled and individually packaged with instructions.

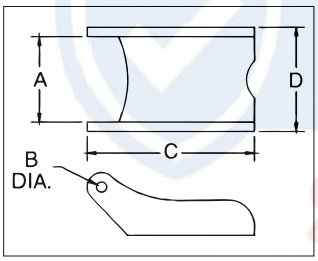

S-4088 Alloy Hook Latch Kits

Hook Chain (mm)	Stock No.	Weight Each (kg)	Dimensions (mm)			
			A	B	C	D
6-7	1090250	.03	19.8	4.05	51.5	23.9
8-10	1090251	.06	26.2	4.85	68.5	31.8
13	1090252	.07	26.2	4.85	76.0	31.8
16	1090253	.07	26.2	4.85	82.5	31.8
19	1090254	.07	38.9	6.60	105	47.8
22	1090255	.07	38.9	6.60	118	51.0

Copyright © 2023 The Crosby Group LLC All Rights Reserved

HOOK CONNECTORS

The 5 connector styles shown below make it possible for Crosby to furnish a Golden Gate Hook to fit almost any make or model of hoisting equipment including, American Engineering Lo-Hed, ARO, Coffing, Electro Lift, Ingersoll-Rand, P & H, Robbins and Myers, Shepard Niles, CM, Shaw-Box, Wright, Yale & Towne.

CLOSED SWIVEL BAIL

For use where hoisting line or shackle can be inserted into the bail. Suitable for positioning before lifting. Hook sizes: 1 through 14.

Style C — with self-closing gate.
Style A — with manual-closing gate.

SHANK-TYPE HOOK

(Standard Length)

For use on existing load blocks, with standard shank length. Hook sizes: 2 through 14.

Style D — with self-closing gate.
Style B — with manual-closing gate.

SHANK-TYPE HOOK

(Long Length)

For use on existing load blocks requiring extra shank length. Hook sizes: 4 through 17.

Style K — with self-closing gate.
Style I — with manual-closing gate.

UNIVERSAL TYPE

Open swivel bail for attachment to link chain. Suitable for positioning before lifting. Hook sizes: 3, 4, and 5.

Style E — with self-closing gate.
Style G — with manual-closing gate.

LINK CHAIN NEST

With ball-bearing swivel; attaches to chain by an alloy pin. Suitable for frequent rotation under load. Hook sizes: 4, 5, and 7.

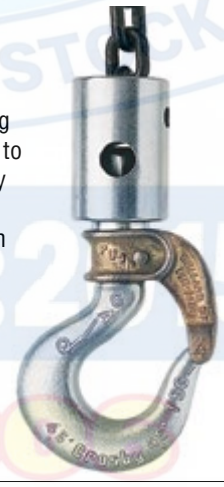

Style O — with self-closing gate.
Style P — with manual-closing gate.

Letter designations shown beneath each illustration above indicate BOTH connector style and gate type. Each connector is available with either a self-closing or manual-closing gate. (e.g. A size 4 hook with a closed swivel bail connector and self-closing gate is 4-C; with manual-closing gate, it is 4-A.)

Copyright © 2023 The Crosby Group LLC All Rights Reserved

GATE TYPES

Brass alloy Golden Gates® are engineered for quality, easy handling and dependability. The heavy duty, corrosion resistant locking mechanism will stay locked until an operator releases it; yet, can easily be shut with one hand. Cost effective, these gates reduce down time, providing the alternative to conventional latches.

LIF-LOK® GATE - SIZE 1

To lock: Close the gate; the built-in spring locks the gate against the hook tip.

To Unlock: Lift the gate upward on the hook shank and swing open.

ROLLOX® GATE - SIZE 5 through 9

To Lock: Close the gate; a stainless steel pin is mounted in a horizontal bore which passes through the gate and engages a notch milled in the hook shank.

To Unlock: Move the lever downward a quarter-turn or until it stops, the gate can now swing open 160 ° (approx.)

PIN-LOK® GATE - SIZE 2 through 4

To Lock: Close the gate; a stainless steel pin is carried in a horizontal bore and engages a milled slot in the hook shank.

To Unlock: Simply depress the stainless steel pin which causes the pin to disengage from the milled slot.

TIP-LOK® GATE - SIZE 10 through 17

To Lock: Press the arm down until the lock trips; two arms of the gate now enclose the tip of the hook.

To Unlock: Manually depressing the locking trigger automatically raises the movable arm, allowing the gate to be rotated open.

Copyright © 2023 The Crosby Group LLC All Rights Reserved

Crosby

Closed Swivel Bail

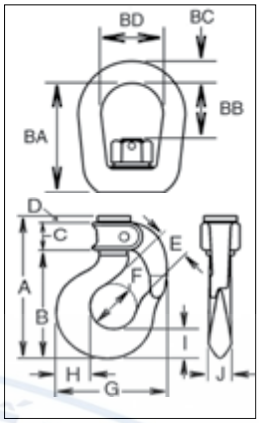

- For use where hoisting line or shackle can be inserted into the bail.
  - BL-C with self-closing gate
  - BL-A with manual-closing gate
- Suitable for positioning before lifting.
- Crosby Bullard® Hooks incorporate QUIC-CHECK® deformation and angle indicators. (For detailed information, see the Crosby Value Added page at the beginning of this section.)

Lead Rated QUIC-CHECK QT CE

APPLICATION AND WARNING INFORMATION SECTION 17

Closed Swivel Bail

Hook Size	BL-C Stock No.	BL-A Stock No.	Gate Type	Working Load Limit (t)	Weight Each (kg)	Dimensions (mm) A	B	C	D	E	F	G	H	I	J	BA	BB	BC	BD
1	1050210	1050001	LIF-LOK	.45	.36	82.0	58.7	16.0	6.60	17.5	22.4	57.0	17.5	16.0	11.2	44.5	16.0	7.85	25.4
2	1050221	1050012	PIN-LOK	.90	.59	105	76.2	23.6	4.06	24.6	31.8	73.0	20.6	19.1	11.2	47.2	24.1	9.65	31.8
3	1050232	1050023	PIN-LOK	1.3	.86	114	84.0	23.9	5.58	26.9	35.1	84.0	23.9	21.3	16.0	62.0	33.3	12.7	38.1
4	1050243	1050034	PIN-LOK	1.5	1.00	124	92.2	25.4	5.58	28.7	38.1	92.0	29.5	25.4	19.1	67.5	34.3	12.7	38.1
5	1050254	1050045	ROLLOX	2.1	1.72	143	105	31.2	6.35	31.8	41.7	104	33.3	28.4	21.3	74.0	40.6	16.0	44.5
6	1050265	1050056	ROLLOX	3.6	2.09	158	119	31.8	6.35	35.3	41.7	116	39.9	34.0	24.6	78.5	35.8	16.0	44.5
7	1050276	1050067	ROLLOX	3.8	3.13	168	132	28.4	6.35	38.1	51.0	125	41.4	36.6	28.7	88.5	42.4	19.1	51.0
8	1050287	1050078	ROLLOX	5.0	4.35	182	147	26.9	7.11	44.5	57.0	148	51.0	41.9	31.2	103	51.0	22.4	57.0
9	1050298	1050089	ROLLOX	6.5	6.12	199	164	26.9	7.87	47.8	63.5	165	52.5	46.0	35.1	118	56.0	26.2	63.5
11	1050309	1050100	TIP-LOK	8.3	9.30	244	203	31.8	7.87	57.0	76.0	192	67.0	57.0	41.1	124	66.5	28.7	70.0
12	1050320	1050111	TIP-LOK	11.1	12.3	267	225	31.8	9.65	63.5	82.5	221	74.5	65.5	49.3	130	57.0	31.8	79.5
14	1050342	1050133	TIP-LOK	16.7	25.0	320	273	35.8	9.65	86.0	108	279	89.0	75.5	60.5	203	108	41.4	104

4:1 Design Factor.

Open Swivel Bail

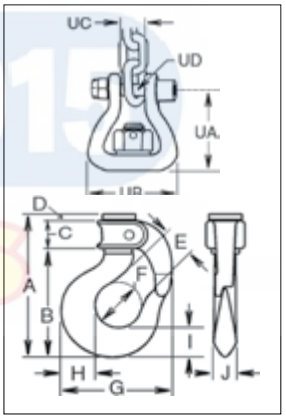

- Open Swivel Bail for attachment to link chain.
  - BL-E with self-closing gate
  - BL-G with manual-closing gate
- Suitable for positioning before lifting.
- Crosby Bullard® Hooks incorporate QUIC-CHECK® deformation and angle indicators. (For detailed information, see the Crosby Value Added page at the beginning of this section.)

Lead Rated CE

Open Swivel Bail

Hook Size	BL-E Stock No.	BL-G Stock No.	Gate Type	Working Load Limit (t)	Weight Each (kg)	Dimensions (mm) A	B	C	D	E	F	G	H	I	J	UA	UB	UC	UD
3	1051607	1051706	PIN-LOK	1.3	.81	114	84.5	23.9	5.58	26.9	35.1	81.0	23.9	21.3	16.0	53.0	59.0	13.2	9.65
4	1051618	1051717	PIN-LOK	1.5	.95	124	92.2	25.4	5.58	28.7	38.1	92.0	29.5	25.4	19.1	54.5	59.0	13.2	9.65
5	1051629	1051728	ROLLOX	2.1	1.45	143	105	31.2	6.35	31.8	41.7	104	33.3	28.4	21.3	65.0	67.0	15.7	11.2

4:1 Design Factor.

Copyright © 2023 The Crosby Group LLC All Rights Reserved

Link Chain Nest

- With ball bearing swivel; attaches to chain by an alloy pin.
  - BL-O with self-closing gate
  - BL-P with manual-closing gate
- Suitable for frequent rotation under load.
- Crosby Bullard® Hooks incorporate QUIC-CHECK® deformation and angle indicators. (For detailed information, see the Crosby Value Added page at the beginning of this section.)

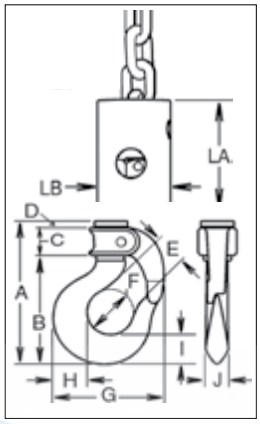

APPLICATION AND WARNING INFORMATION
SECTION 17

Link Chain Nest

Chain Size	BL-O Stock No.	BL-P Stock No.	Gate Type	Working Load Limit (t)	Weight Each (kg)	Dimensions (mm)											
						A	B	C	D	E	F	G	H	I	J	LA	LB
4:1/4-9/32	1051409	1051508	PIN-LOK	1.5	1.13	124	92.2	25.4	5.58	28.7	38.1	92.0	29.5	25.4	19.1	67.0	44.5
5:5/16-3/8	1051442	1051541	ROLLOX	2.1	2.04	143	105	31.2	6.35	31.8	41.7	104	33.3	28.4	21.3	76.0	57.0
7:3/8-7/16	1051464	1051563	ROLLOX	3.8	5.0	168	132	28.4	6.35	38.1	51.0	125	41.4	36.6	28.7	111	76.0
7:1/2-9/16	1051486	1051585	ROLLOX	3.8	5.0	168	132	28.4	6.35	38.1	51.0	125	41.4	36.6	28.7	111	76.0

4:1 Design Factor.

Standard Length

- For use on existing load blocks, with standard shank length.
  - BL-D with self-closing gate
  - BL-B with manual-closing gate
- Numbers 2 through 12 style hooks are threaded approximately 80% of shank length.
- Crosby Bullard® Hooks incorporate QUIC-CHECK® deformation and angle indicators. (For detailed information, see the Crosby Value Added page at the beginning of this section.)

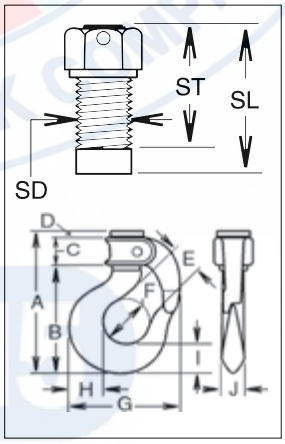

APPLICATION AND WARNING INFORMATION
SECTION 17

Standard Length Shank Hooks

Hook Size	BL-D Stock No.	BL-B Stock No.	Gate Type	Working Load Limit (t)	Weight Each (kg)	Dimensions (mm)												
						A	B	C	D	E	F	G	H	I	J	SD	SL	ST
2	1050606	1050408	PIN-LOK	.91	.50	105	76.2	23.6	4.06	24.6	31.8	73.0	20.6	19.1	14.2	12.7	23.1	15
3	1050617	1050419	PIN-LOK	1.3	.59	114	84.1	23.9	5.58	26.9	35.1	81.0	23.9	21.3	16.0	14.2	31.8	19.1
4	1050628	1050430	PIN-LOK	1.5	.77	124	92.2	25.4	5.58	28.7	38.1	92.0	29.5	25.4	19.1	16	33.3	30.2
5	1050639	1050441	ROLLOX	2.1	1.13	143	105	31.2	6.35	31.8	41.7	104	33.3	28.4	21.3	19.1	33.3	25.4
6	1050650	1050452	ROLLOX	3.6	1.59	158	119	31.8	6.35	35.3	41.7	116	39.9	34.0	24.6	22.4	43	29.5
7	1050661	1050463	ROLLOX	3.8	2.36	168	132	28.4	6.35	38.1	51.0	125	41.4	36.6	28.7	25.4	46	35.1
8	1050672	1050474	ROLLOX	5.0	3.22	182	147	26.9	7.11	44.5	57.0	148	51.0	41.9	31.2	28.7	52.5	38.1
9	1050683	1050485	ROLLOX	6.5	4.31	199	164	26.9	7.87	47.8	63.5	165	52.5	46.0	35.1	31.8	62	46
11	1050694	1050496	TIP-LOK	8.3	7.08	244	203	31.8	7.87	57.0	76.0	192	67.0	57.0	41.1	38.1	68.5	47.8
12	1050705	1050507	TIP-LOK	11.2	9.53	267	225	31.8	9.65	63.5	82.5	221	74.5	65.5	49.3	41.4	73	54
13	1050716	1050518	TIP-LOK	13.6	13.6	285	242	31.8	9.65	76.0	95.0	245	83.5	70.0	49.3	44.5	89	56
14	1050727	1050529	TIP-LOK	16.8	18.1	320	273	35.8	9.65	86.0	108	279	89.0	75.5	60.5	51	92.5	60.5

4:1 Factor de diseño.

Copyright © 2023 The Crosby Group LLC All Rights Reserved

Crosby

Long Length

- For use on existing load blocks requiring extra shank length.
  - BL-K with self-closing gate
  - BL-I with manual closing gate
- Numbers 4 through 9 style hooks are threaded approximately 80% of shank length.
- Crosby Bullard® Hooks incorporate QUIC-CHECK® deformation and angle indicators.

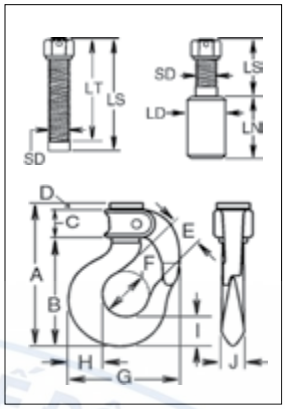

QUIC-CHECK®

APPLICATION AND WARNING INFORMATION
SECTION 17

Long Length Shank Hooks

Hook Size	BL-K Stock No.	BL-I Stock No.	Gate Type	Working Load Limit (t)	Weight Each (kg)	Dimensions (mm)													
						A	B	C	D	E	F	G	H	I	J	SD	LN	LS	LT
4 :1/2	1051002	1050804	PIN-LOK	1.45	.86	124	92.2	25.4	5.58	28.7	38.1	92.0	29.5	25.4	19.1	12.7	11.2	81.0	81.0
4 :9/16	1051013	1050815	PIN-LOK	1.5	.86	124	92.2	25.4	5.58	28.7	38.1	92.0	29.5	25.4	19.1	14.2	12.2	81.0	81.0
4 :5/8	1051024	1050826	PIN-LOK	1.5	.86	124	92.2	25.4	5.58	28.7	38.1	92.0	29.5	25.4	19.1	16.0	14.0	84.0	81.0
5	1051035	1050837	ROLLOX	2.1	1.36	143	105	31.2	6.35	31.8	41.7	104	33.3	28.4	21.3	19.1	16.0	90.5	82.5
6	1051046	1050848	ROLLOX	3.6	1.72	158	119	31.8	6.35	35.3	41.7	116	39.9	34.0	24.6	22.4	19.1	103	90.0
7	1051057	1050859	ROLLOX	3.8	2.68	168	132	28.4	6.35	38.1	51.0	125	41.4	36.6	28.7	25.4	22.4	116	105
8	1051068	1050870	ROLLOX	5.0	3.54	182	147	26.9	7.11	44.5	57.0	148	51.0	41.9	31.2	28.4	23.9	129	114
9	1051079	1050881	ROLLOX	6.5	4.90	199	164	26.9	7.87	47.8	63.5	165	52.5	46.0	35.1	31.8	26.9	141	125
12 ‡	1051101	1050903	TIP-LOK	11.2	12.7	267	225	31.8	9.65	63.5	82.5	221	74.5	65.5	49.3	41.4	39.6	137	118
13 ‡	1051112	1050914	TIP-LOK	13.6	15.9	285	242	31.8	9.65	76.0	95.5	245	83.5	70.0	49.3	44.5	38.1	187	146
14 ‡	1051123	1050925	TIP-LOK	16.8	20.4	320	273	35.8	9.65	86.0	108	279	89.0	75.5	60.5	51.0	50.8	137	102
16	1051134	1050936	TIP-LOK	30.0	46.7	388	332	38.1	16.0	102	127	346	118	92.0	76.0	70.0	70.0	406	178
17	1051156	1050958	TIP-LOK	60.0	168	615	522	66.8	23.9	146	178	470	165	152	113	102	100	578	356

4:1 Design Factor. ‡Hook will have the shank extended by use of a Coupling Nut. Customer is required to complete and approve side 2 of a Crosby Bullard® hook data form.

Crosby® / Bullard Golden Gate Hooks Service Parts

Hook Size	Gate Type	BL-GA Gate Assemblies		BL-RK Gate Repair Kit Stock No.
		Manual Close Stock No.	Self Close Stock No.	
2	PIN-LOK	1100298	1100309	1100101
3	PIN-LOK	1100320	1100331	1100102
4	PIN-LOK	1100342	1100353	1100103
5	ROLLOX	1100364	1100375	1100112
6	ROLLOX	1100386	1100397	1100113
7	ROLLOX	1100408	1100419	1100123
8	ROLLOX	1100430	1100441	1100124
9	ROLLOX	1100452	1100463	1100125
10	TIP-LOK	1100474	1100485	1100133
11	TIP-LOK	1100496	1100507	1100144
12	TIP-LOK	1100518	1100529	1100155
13	TIP-LOK	1100540	1100551	1100166
14	TIP-LOK	1100562	1100573	1100177
15	TIP-LOK	1100584	1100595	1100188
16	TIP-LOK	1100606	1100617	1100199
17	TIP-LOK	1100639	1100628	1100210

Bullard® QUIC-CHECK® Deformation Indicator Table

Hook Size	Hook ID Code	AA (mm)
1	1	38.1
2	D	38.1
3	F	38.1
4	G	50.8
5	H	50.8
6	6	63.5
7	I	63.5
8	8	76.2
9	J	101.6
11	K	101.6
12	L	101.6
13	13	127.0
14	N	127.0
16	O	165.1
17	T	254.0

Copyright © 2023 The Crosby Group LLC All Rights Reserved

O-318

- With ball bearing swivel; attaches to chain by an alloy pin.
- Suitable for frequent rotation under load.
- O-318 Hooks utilize Crosby SHUR-LOC® positive locking hooks. Latch is self-locking when hook is loaded.
- O-319 Hooks utilize Crosby® standard 319 Shank Hooks which incorporate QUIC-CHECK® deformation and angle indicators. (For detailed information, see the Crosby Value Added page at the beginning of this section.)
- Entire assembly is zinc plated.
- Repair kit available consisting of bearing and spring pin.

O-319

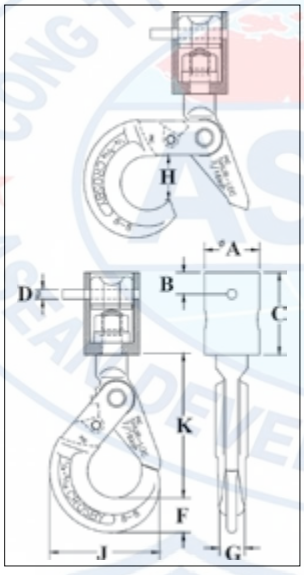

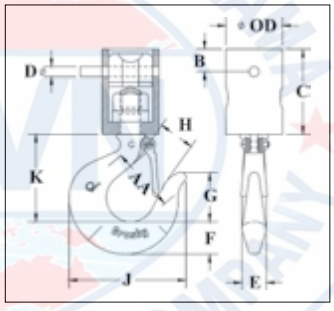

QUIC-CHECK®

APPLICATION AND WARNING INFORMATION
SECTION 17

O-318 Chain Nest Hooks

Chain Size (mm)	Stock No.	Working Load Limit (t)	Weight Each (kg)	Dimensions (mm) A	B	C	D	F	G	H	J	K	Replacement Trigger Kit Stock No.
6 - 7	1098409	1.5	1.59	44.5	17.8	66.5	7.87	27.9	20.6	37.1	89.0	117	6603011
8 - 10	1098427	2.1	2.72	54.0	17.8	81.0	9.65	29.2	23.9	46.5	110	144	6603012
10 - 11	1098445	3.8	6.24	76.0	25.4	111	12.7	42.2	29.5	53.5	138	179	6603013
13 - 14	1098463	3.8	6.24	76.0	25.4	111	16.0	42.2	29.5	53.5	138	179	6603013

4:1 Design Factor.

O-319 Chain Nest Hooks

Chain Size (mm)	Stock No.	Working Load Limit (t)	Weight Each (kg)	Dimensions (mm) OD	AA	B	C	D	E	F	G	H	J	K	Replacement Trigger Kit Stock No.
6 - 7	1098312	1.5	1.16	44.5	51.0	17.8	66.5	7.87	19.1	25.4	38.9	25.4	92.0	68.5	1096421
8 - 10	1098334	2.1	1.81	54.0	51.0	17.8	81.0	9.65	21.3	28.4	43.7	28.4	104	77.5	1096468
10 - 11	1098356	3.8	4.54	76.0	63.5	25.4	111	12.7	28.4	36.6	54.0	34.0	123	96.0	1096515
13 - 14	1098378	3.8	4.54	76.0	63.5	25.4	111	16.0	28.4	36.6	54.0	34.0	123	96.0	1096515

4:1 Design Factor. *Deformation indicators.

© 2024-2025 The Crosby Group LLC. All Rights Reserved.

Crosby

S-3319

- Designed for utility applications using synthetic rope.
- Suitable for positioning before lifting.
- Hook is forged alloy steel, Quenched & Tempered.
- Design of hook provides needed overhaul weight.
- Utilizes spool & shield designed to protect rope and keep rope positioned correctly on spool.
- Spool provides wider rope bearing surface resulting in an increased area for load distribution and reduces rope abrasion.

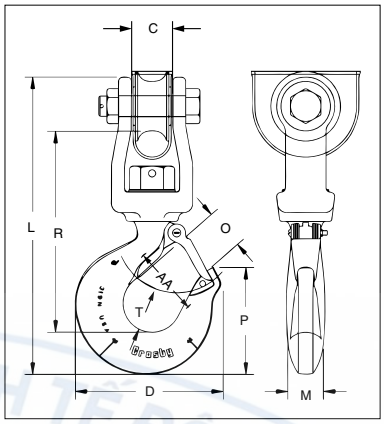

CE Q&T QUIC-CHECK®

APPLICATION AND WARNING INFORMATION
SECTION 17

S-3319 Utility Swivel Hook

Working Load Limit (t)	Stock No.	Weight Each (kg)	Hook ID Code	Synthetic Rope Size (mm)	Dimensions (mm)									Replacement Latch Kit Stock No.
					C	D	L	M	O	P	R	T	AA*	
1.63	1002054	1.90	HA	14 - 16	27.7	101	222	23.9	29.5	70.6	151	29.5	2.00	1096468
2.50	1002063	3.62	IA	19 - 21	33.2	123	268	30.2	35.8	88.1	179	38.9	2.50	1096515
4.50	1002072	6.80	JA	22 - 27	45.2	160	324	36.6	45.2	117	221	49.3	3.00	1096562

5:1 Design Factor. Maximum allowable proof load is 2 times the Working Load Limit. *Deformation indicators.

BH-313

- Wide range of sizes available: 1-10 metric ton capacity.
- Forged alloy steel.
- Designed for attachment to mobile lifting equipment to provide a pick point for easy sling attachment.
- Large weld pad.
- Heavy duty latch interlocks with the hook tip. Replacement latches are available.
- Detailed installation and application instructions included with each hook.

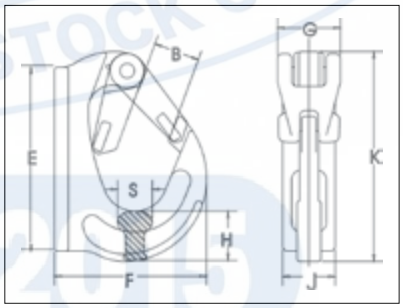

BH-313 Weld-On Hooks

Working Load Limit (t)	Stock No.	Weight Each (kg)	Dimensions (mm)								Replacement Latch Stock No.
			B	E	F	G	H	J	K	S	
1	1029105	.52	23.1	97.0	71.0	36.1	26.9	25.9	107	18.0	1092104
2	1029114	.84	23.1	82.0	91.0	36.1	24.9	34.0	115	21.1	1092104
3	1029123	1.18	29.0	117	105	36.1	31.0	36.1	131	23.9	1092104
4	1029132	1.90	34.0	131	114	46.0	36.1	42.9	147	29.0	1092105
5	1029141	2.55	34.0	161	133	47.0	45.0	43.9	173	29.0	1092105
8	1029150	3.30	35.1	166	135	47.0	52.0	52.0	178	39.1	1092105
10	1029169	5.00	49.0	205	168	47.0	57.0	54.0	222	39.1	1092106

5:1 Design Factor.

Copyright © 2023 The Crosby Group LLC All Rights Reserved

A-350L

- New style incorporates throat opening equal to or larger than old style hooks.
- Each product has a Product Identification Code (PIC) for material traceability, along with a Working Load Limit, and the name Crosby or "CG" forged into it.
- All hooks incorporate Crosby's patented QUIC-CHECK® deformation indicators to help in determining if throat opening dimension has changed.
- Each hook is equipped with a Crosby S-4320 heavy duty stamped latch with the high cycle, long life spring.
- Forged alloy steel, Quenched & Tempered.

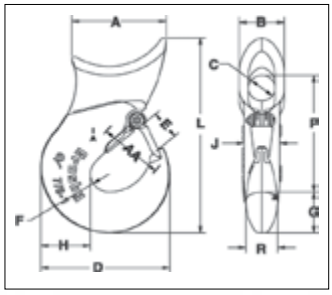

A-350L Sliding Choker Hook

Single Part Rope Size (in. - mm)	Eight Part Rope Size (mm)	Stock No.	WLL (t)	Weight Each (kg)	Dimensions (mm)												Hook Frame Code	Replacement Latch Kit Stock No.
					A	B	C	D	E	F	G	H	L	P	R	AA*		
3/8 - 10	-	1011802	1.13	.35	52.5	28.7	16.0	61.0	16.0	9.65	21.3	23.1	109	66.0	16.0	38.1	DA	1096325
1/2 - 13	3	1011811	1.50	.54	57.0	33.3	19.1	75.5	19.8	12.7	24.6	26.9	126	78.5	19.1	38.1	FA	1096374
† 5/8 - 16	-	1011820	2.27	1.31	77.5	41.4	19.1	90.5	23.9	14.2	28.7	33.3	162	98.5	25.4	50.8	GA	1096421
† 5/8 - 16	4	1011839	2.27	1.22	77.5	41.4	25.4	90.5	23.9	14.2	28.7	33.3	162	102	28.7	50.8	GA	1096421
† 3/4 - 20	-	1011848	3.63	2.35	86.0	54.0	25.4	108	29.5	16.0	36.6	41.4	195	116	28.7	63.5	HA	1096468
† 3/4 - 20	6-7	1011857	3.63	2.27	86.0	54.0	36.6	108	29.5	16.0	36.6	41.4	195	121	28.7	63.5	HA	1096468
†† 7/8-1 - 22-25	-	1028177	6.75	4.40	112	53.8	31.8	154	35.8	22.4	51.0	59.2	243	145	38.1	76.2	IA	1096515

*Deformation indicators. †Determine eye diameter "C" before ordering. ††22-25mm is cast steel.

G-3315

- Forged carbon steel, Quenched & Tempered.
- Pressed steel latches and stainless steel springs, bolts and nuts.
- For replacement latch kit, order Stock No. 9900299.
- Hook body - galvanized.
- Suitable for overhead lifting if provisions are made for meeting applicable standards and the specific lifting requirements.

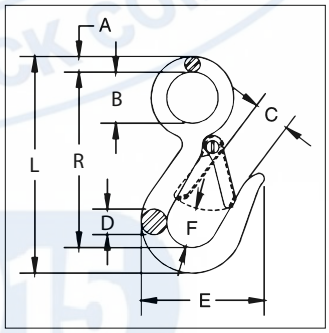

G-3315 Snap Hook

Hook Size (mm)	Stock No.	Working Load Limit (t)	Weight Each (kg)	Dimensions (mm)							
				A	B	C	D	E	F	L	R
12	1023056	.34	.11	6.35	19.1	19.1	11.2	57.0	19.1	100	82.5
14	1023074	.45	.22	8.65	28.4	20.6	14.2	68.5	22.4	120	97.5

4:1 Design Factor.

Copyright © 2023 The Crosby Group LLC All Rights Reserved

Crosby

S-377

- Forged carbon steel, Quenched & Tempered.
- The resultant load on each hook cannot exceed 0.5t.
- Meets the performance requirements of Federal Specification RR-C-271G, Type V, Class 6, except for those provisions required of the contractor.

S-377 Barrel Hooks

Working Load Limit Per Pair (t)	Stock No. Per Pair	Weight Each Per Pair (kg)	Dimensions (mm)			
			I.D. of Eye	O.D. of Eye	Overall Length	Width of Lip
1.0	1028248	1.61	39.6	71.4	127	73.2

4:1 Design Factor.

S-3316

- Easily attaches to any chain and electric hoist with welded link load chain, roller chain or wire rope with suitable end fitting.
- Swivel jaw is forged.
- Suitable for positioning before lifting.

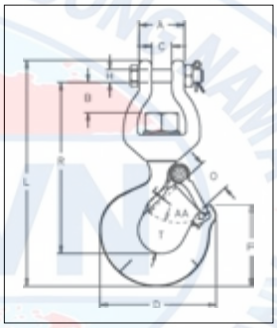

APPLICATION AND WARNING INFORMATION
SECTION 17

S-3316 Replacement Hook

Working Load Limit (t)	Frame Code	Stock No.	Weight Each (kg)	Dimensions (mm)											Replacement Latch Kit Stock No.
				A	B	C	D	H	L	O	P	R	T	AA	
.5	F	1023029	.57	33.5	17.8	14.2	80.0	9.7	159	24.4	56.4	120	25.1	50.8	1096374
1	H	1023047	1.18	33.5	25.4	17.0	101	11.2	197	29.5	70.6	150	29.5	50.8	1096468

5:1 Design Factor.

A-378

- Forged alloy steel, Quenched & Tempered.
- Deep straight throat permits efficient handling of flat plates or large cylindrical shapes.

A-378
with Handle

A-378 Sorting Hook

Working Load Limit at tip of Hook (t)	Working Load Limit at bottom of Hook (t)	Stock No	Style	Weight Each (kg)	Dimensions (mm)			
					I.D. of Eye	Overall Length	Opening at top of Hook	Radius at bottom of Hook
1.8	6.8	1028024	No Handle	2.91	35.0	246	71.4	15.9
1.8	6.8	1028033	With Handle	2.91	35.0	246	71.4	15.9

4:1 Design Factor.

Copyright © 2023 The Crosby Group LLC All Rights Reserved

Crosby® Forged Swivels

- 402 and 403 forged swivels are positioning devices and are not intended to rotate under load.
- Hot-dip galvanized.
- Quenched & Tempered.
- Crosby products meet or exceed all requirements of ASME B30.26 including identification, ductility, design factor, proof load and temperature requirements. Importantly, Crosby products meet other critical performance requirements, including fatigue life, impact properties and material traceability, not addressed by ASME B30.26.
- G-402 swivels meet the performance requirements of Federal Specification RR-C-271G, Type VII, Class 2, except for those provisions required of the contractor.
- G-403 swivels meet the performance requirements of Federal Specification RR-C-271G, Type VII, Class 3, except for those provisions required of the contractor.

13 - 32mm size

38mm size

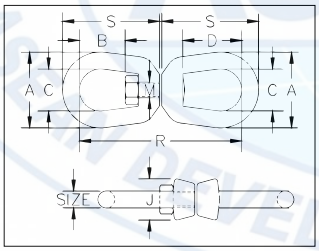

G-402 Regular Swivels

Size (mm)	Stock No.	Working Load Limit (t)	Weight Each (kg)	Dimensions (mm) A	B	C	D	J	M	R	S
6	1016019	.39	.10	31.8	17.5	19.1	26.9	17.5	7.85	74.6	42.9
8	1016037	.57	.18	41.4	20.6	25.4	31.8	20.6	9.65	90.4	52.3
10	1016055	1.02	.32	51.0	23.9	31.8	38.1	25.4	12.7	109	63.5
13	1016073	1.63	.60	63.5	33.3	38.1	51.0	33.3	16.0	138	81.0
16	1016091	2.36	1.13	76.0	39.5	44.5	60.5	38.1	19.1	167	98.5
19	1016117	3.27	1.82	89.0	44.5	51.0	67.0	47.8	22.4	183	109
22	1016135	4.54	2.83	102	52.0	57.0	77.5	54.0	25.4	213	127
25	1016153	5.67	4.06	114	58.5	63.5	89.0	60.5	28.7	245	146
32	1016199	8.16	7.42	143	68.5	79.5	93.5	76.0	38.1	291	172
38	1016215	20.5	20.8	180	98.5	104	98.5	95.2	57.0	424	252

5:1 Design Factor.

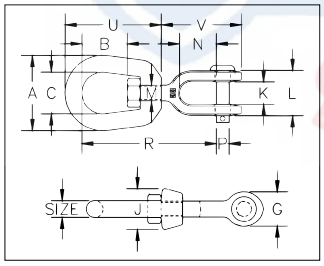

G-403 Jaw End Swivels

Size (mm)	Stock No.	Working Load Limit (t)	Weight Each (kg)	Dimensions (mm) A	B	C	G	J	K	L	M	N	P	R	U	V
6	1016395	.39	.10	31.8	17.5	19.1	17.5	17.5	11.9	26.2	7.9	22.4	6.4	67.0	42.9	42.9
8	1016411	.57	.15	41.4	20.6	25.4	20.6	20.6	12.7	28.7	9.7	22.4	7.9	74.5	52.0	46.0
10	1016439	1.02	.30	51.0	23.9	31.8	25.4	25.4	16.0	35.8	12.7	26.9	9.7	92.0	63.5	57.0
13	1016457	1.63	.61	63.5	33.3	38.1	33.3	33.3	19.1	44.5	16.0	33.3	12.7	114	81.0	73.0
16	1016475	2.36	1.12	76.0	39.5	44.5	41.4	38.1	23.9	52.0	19.1	38.1	16.0	135	98.5	87.5
19	1016493	3.27	1.76	89.0	44.5	51.0	47.8	47.8	28.7	64.5	22.4	44.5	19.1	154	109	102
22	1016518	4.54	2.66	102	52.0	57.0	54.0	54.0	34.0	70.9	25.4	52.0	22.4	178	127	115
25	1016536	5.67	4.46	114	58.5	63.5	67.0	60.5	44.5	94.5	28.7	71.5	28.7	217	146	151
32	1016572	8.16	7.14	145	68.5	79.5	79.5	76.0	52.0	109	41.4	71.5	35.1	248	179	162
38+	1016590	20.5	24.8	178	98.5	102	143	102	73.0	152	57.0	113	57.0	362	254	275

5:1 Design Factor.

Copyright © 2023 The Crosby Group LLC All Rights Reserved

Crosby® Tapered Roller Bearing Swivels

- Equipped with tapered roller thrust bearing.
- Suitable for frequent rotation under load.
- All swivels individually proof tested to 2 times the Working Load Limit with labeled documentation.
- All hooks furnished with latches assembled.
- All jaws complete with bolts, nuts, and cotter pins.
- Pressure lube fitting provided.
- NOT TO BE USED ON DEMOLITION (WRECKING) BALLS.
- Other types and capacities up to 1,250t available to meet your requirements. Visit thecrosbygroup.com/engineeredsolutions for more information.
- IMPORTANT - Crosby swivels should only be used with the recommended wire rope. Contact the wire rope manufacturer for the proper wire rope to be used with Crosby swivels.

S-1 Jaw & Hook

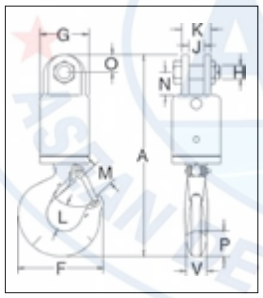

Swivel No.	Stock No.	Working Load Limit (t)	Wire Rope Size (mm)	Weight Each (kg)	Dimensions (mm)											
					A	F	G	H	J	K	L	M	N	O	P	V
3-S-1	297011	3	13	4.45	291	123	70.0	19.1	22.4	41.1	38.9	35.8	33.3	25.4	36.6	28.4
5-S-1	297217	5	16	7.04	339	160	76.0	22.4	25.4	57.0	49.3	42.9	41.1	28.4	46.0	36.6
8-S-1	297413	8.5	19	13.3	418	192	102	25.4	39.5	71.5	62.5	56.5	54.0	35.1	57.0	41.1
10-S-1	297618	10	22	21.2	502	212	114	38.1	44.5	86.0	66.0	61.0	89.0	44.5	66.0	49.3
15-S-1	297814	15	26	33.5	565	263	127	38.1	44.5	86.0	71.5	81.0	89.0	44.5	76.0	60.5
25-S-1	298118	25	-	64	680	346	152	51.0	51.0	117	87.5	92.0	93.5	60.5	93.0	76.0
35-S-1	298216	35	-	100	760	357	165	51.0	51.0	117	98.5	95.5	93.5	60.5	116	81.0
45-S-1	298314	45	-	114	891	392	178	57.0	63.5	127	121	108	102	76.0	129	82.5

5:1 Design Factor. Individually Proof Tested to 2 times the Working Load Limit.

S-2 Jaw & Jaw

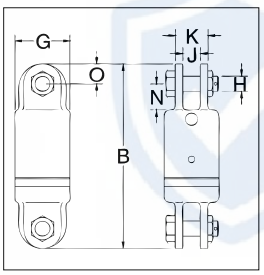

Swivel No.	Stock No.	Working Load Limit (t)	Wire Rope Size (mm)	Weight Each (kg)	Dimensions (mm)						
					B	G	H	J	K	N	O
3-S-2	297020	3	13	4.37	236	70.0	19.1	22.4	41.1	33.3	25.4
5-S-2	297226	5	16	6.21	262	76.0	22.4	25.4	57.0	41.1	28.4
8-S-2	297422	8.5	19	11.9	321	102	25.4	39.5	71.5	54.0	35.1
10-S-2	297627	10	22	20.8	426	114	38.1	44.5	86.0	89.0	44.5
15-S-2	297823	15	26	28.5	435	127	38.1	44.5	86.0	89.0	44.5
25-S-2	298127	25	-	64	527	152	51.0	51.0	117	93.5	60.5
35-S-2	298225	35	-	70	527	165	51.0	51.0	117	93.5	60.5
45-S-2	298323	45	-	107	641	178	57.0	63.5	127	102	76.0

5:1 Design Factor. Individually Proof Tested to 2 times the Working Load Limit.

S-3 Jaw & Eye

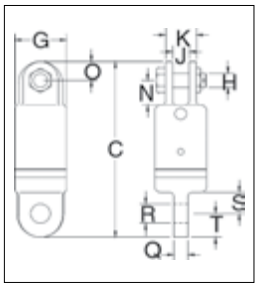

Swivel No.	Stock No.	Working Load Limit (t)	Wire Rope Size (mm)	Weight Each (kg)	Dimensions (mm)										
					C	G	H	J	K	N	O	Q	R	S	T
3-S-3	297039	3	13	4.14	237	70.0	19.1	22.4	41.1	33.3	25.4	19.1	26.2	28.4	31.8
5-S-3	297235	5	16	6.12	256	76.0	22.4	25.4	57.0	41.1	28.4	25.4	32.5	31.8	31.8
8-S-3	297431	8.5	19	11.3	311	102	25.4	39.5	71.5	54.0	35.1	31.8	35.8	41.1	38.1
10-S-3	297636	10	22	19.7	409	114	38.1	44.5	86.0	89.0	44.5	42.9	42.9	70.0	47.8
15-S-3	297832	15	26	27.7	425	127	38.1	44.5	86.0	89.0	44.5	49.3	51.5	70.0	54.0
25-S-3	298136	25	-	61	546	152	51.0	51.0	117	93.5	60.5	57.0	58.5	98.5	60.5
35-S-3	298234	35	-	68	546	165	51.0	51.0	117	93.5	60.5	57.0	58.5	98.5	60.5
45-S-3	298332	45	-	102	657	178	57.0	63.5	127	102	76.0	63.5	64.5	102	76.0

5:1 Design Factor. Individually Proof Tested to 2 times the Working Load Limit.

Copyright © 2023 The Crosby Group LLC All Rights Reserved

S-4 Eye & Jaw

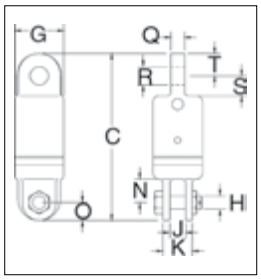

Swivel No.	Stock No.	Working Load Limit (t)	Wire Rope Size (mm)	Weight Each (kg)	Dimensions (mm)										
					C	G	H	J	K	N	O	Q	R	S	T
3-S-4	297048	3	13	4.08	237	70.0	19.1	22.4	41.1	33.3	25.4	19.1	26.2	28.4	31.8
5-S-4	297244	5	16	5.60	256	76.0	22.4	25.4	57.0	41.1	28.4	25.4	32.5	31.8	31.8
8-S-4	297440	8.5	19	13.2	311	102	25.4	39.5	71.5	54.0	35.1	31.8	35.8	41.1	38.1
10-S-4	297645	10	22	20.0	409	114	38.1	44.5	86.0	89.0	44.5	42.9	42.9	70.0	47.8
15-S-4	297841	15	26	27.7	425	127	38.1	44.5	86.0	89.0	44.5	49.3	51.5	70.0	54.0
25-S-4	298145	25	-	61	546	152	51.0	51.0	117	93.5	60.5	57.0	58.5	98.5	60.5
35-S-4	298243	35	-	68	546	165	51.0	51.0	117	93.5	60.5	57.0	58.5	98.5	60.5
45-S-4	298341	45	-	102	657	178	57.0	63.5	127	102	76.0	63.5	64.5	102	76.0

5:1 Design Factor. Individually Proof Tested to 2 times the Working Load Limit.

S-5 Eye & Eye

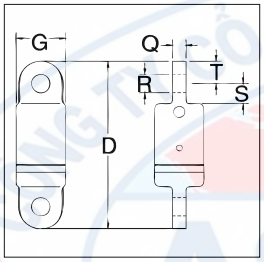

Swivel No.	Stock No.	Working Load Limit (t)	Wire Rope Size (mm)	Weight Each (kg)	Dimensions (mm)					
					D	G	Q	R	S	T
3-S-5	297057	3	13	3.86	239	70.0	19.1	26.2	28.4	31.8
5-S-5	297253	5	16	5.13	249	76.0	25.4	32.5	31.8	31.8
8-S-5	297459	8.5	19	13.3	302	102	31.8	35.8	41.1	38.1
10-S-5	297654	10	22	19.1	394	114	42.9	42.9	70.0	47.8
15-S-5	297850	15	26	22.2	416	127	49.3	51.5	70.0	54.0
25-S-5	298154	25	-	59	565	152	57.0	58.5	98.5	60.5
35-S-5	298252	35	-	66	565	165	57.0	58.5	98.5	60.5
45-S-5	298350	45	-	98	673	178	63.5	64.5	102	76.0

5:1 Design Factor. Individually Proof Tested to 2 times the Working Load Limit.

S-6 Eye & Hook

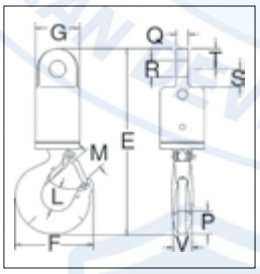

Swivel No.	Stock No.	Working Load Limit (t)	Wire Rope Size (mm)	Weight Each (kg)	Dimensions (mm)										
					E	F	G	L	M	P	Q	R	S	T	V
3-S-6	297066	3	13	4.23	292	123	70.0	38.9	35.8	36.6	19.1	26.2	28.4	31.8	28.4
5-S-6	297262	5	16	6.46	332	160	76.0	49.3	42.9	46.0	25.4	32.5	31.8	31.8	36.6
8-S-6	297468	8.5	19	14.5	408	192	102	62.5	56.5	57.0	31.8	35.8	41.1	38.1	41.1
10-S-6	297663	10	22	20.6	486	212	114	66.0	61.0	66.0	42.9	42.9	70.0	47.8	49.3
15-S-6	297869	15	26	28.6	540	263	127	71.5	81.0	76.0	49.3	51.5	70.0	54.0	60.5
25-S-6	298163	25	-	61	699	346	152	87.5	92.0	93.0	57.0	58.5	98.5	60.5	76.0
35-S-6	298261	35	-	98	780	357	165	98.5	95.5	116	57.0	58.5	98.5	60.5	81.0
45-S-6	298369	45	-	122	907	392	178	121	108	129	63.5	64.5	102	76.0	82.5

5:1 Design Factor. Individually Proof Tested to 2 times the Working Load Limit.

Copyright © 2023 The Crosby Group LLC All Rights Reserved

Crosby

Crosby® Angular Contact Bearing Swivels

- Designed for high rotation speed, lower torque required to initiate rotation.
- Angular contact bearings maximize efficiency, reliability, and service life of swivel and extend the life of the wire rope.
- Entire swivel is zinc plated to resist corrosion.
- Individually Proof Tested to 2 times the Working Load Limit with certification.
- Hook models utilize genuine Crosby hooks which are forged alloy steel, quenched and tempered, and contain patented QUIC-CHECK® markings.
- Each swivel 7.65 metric tons and larger is furnished with a pressure lubrication fitting.
- For swivels larger than those listed, visit thecrosbygroup.com/engineeredsolutions for more information.

AS-1 Jaw & Hook

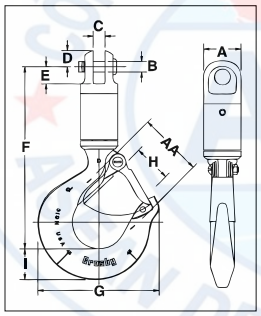

AS-1 JAW & HOOK				Dimensions (mm)										
Working Load Limit (t)	Wire Rope Size (mm)	Stock No.	Weight Each (kg)	A	B	C	D	E	F	G	H	I	Deformation Indicator AA	Replacement Latch Kit Stock No.
.40	3	1016001	.32	22.4	6.35	6.35	9.65	10.4	110	72.5	23.6	18.5	38.1	1096325
.68	6	1016010	.68	33.3	9.65	7.85	11.2	14.2	138	80.0	24.6	21.3	38.1	1096374
1.35	10	1016025	1.04	41.4	12.7	12.7	17.5	19.8	161	102	29.5	29.0	38.1	1096374
2.70	13	1016026	2.95	51.0	19.1	19.1	23.9	30.2	221	123	35.8	36.6	63.5	1096374
4.50	16	1016040	5.85	63.5	22.4	25.4	28.7	38.9	272	160	42.9	46.2	76.0	1096562
7.65	19	1016045	12.0	76.0	30.2	39.5	34.0	53.0	347	212	61.0	66.0	102	1096657
9.00	22	1016056	24.0	102	38.1	44.5	44.5	89.0	456	263	81.0	76.0	127	1096704
13.5	25	1016064	24.0	102	38.1	44.5	44.5	89.0	456	263	81.0	76.0	127	1096704
22.5	32	1016075	44.0	127	51.0	51.0	60.5	93.5	530	346	82.5	92.0	165	1090161
31.5	38	1016082	63.5	127	51.0	51.0	60.5	93.5	610	357	76.0	116	178	1090189

5:1 Design Factor. Individually Proof Tested to 2 times the Working Load Limit.

AS-2 Jaw & Jaw

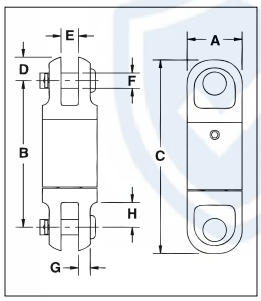

AS-2 JAW & JAW				Dimensions (mm)							
Working Load Limit (t)	Wire Rope Size (mm)	Stock No.	Weight Each (kg)	A	B	C	D	E	F	G	H
.40	3	1016103	.18	22.4	60.5	79.5	9.65	6.35	6.35	4.80	10.4
.68	6	1016114	.41	33.3	90.0	113	11.2	7.85	9.65	5.60	14.2
1.35	10	1016122	.91	41.4	103	138	17.5	12.7	12.7	7.10	19.8
2.70	13	1016131	2.22	51.0	159	207	23.9	19.1	19.1	9.65	30.2
4.50	16	1016139	4.35	63.5	197	270	28.7	25.4	22.4	13.5	38.9
7.65	19	1016148	7.17	76.0	245	313	34.0	39.5	30.2	14.2	53.0
9.00	22	1016157	18.1	102	356	445	44.5	44.5	38.1	20.6	89.0
13.5	25	1016166	18.1	102	356	445	44.5	44.5	38.1	20.6	89.0
22.5	32	1016175	35.4	127	405	526	60.5	51.0	51.0	28.7	93.5
31.5	38	1016184	35.4	127	405	526	60.5	51.0	51.0	28.7	93.5

5:1 Design Factor. Individually Proof Tested to 2 times the Working Load Limit.

Copyright © 2023 The Crosby Group LLC All Rights Reserved

AS-3 Jaw & Eye

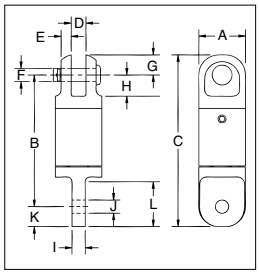

AS-3 JAW & EYE				Dimensions (mm)											
Working Load Limit (t)	Wire Rope Size (mm)	Stock No.	Weight Each (kg)	A	B	C	D	E	F	G	H	I	J	K	L
.40	3	1016205	.14	22.4	63.5	82.5	6.35	4.80	6.35	9.65	10.4	6.35	6.35	9.65	21.3
.68	6	1016216	.41	33.3	93.5	116	7.85	5.60	9.65	11.2	14.2	7.85	9.65	11.0	22.4
1.35	10	1016224	.86	41.4	106	138	12.7	7.10	12.7	17.5	19.8	12.7	16.8	16.0	35.1
2.70	13	1016232	2.09	51.0	157	207	19.1	9.65	19.1	23.9	30.2	19.1	23.1	25.0	51.0
4.50	16	1016243	4.13	63.5	200	259	25.4	13.5	22.4	28.7	38.1	25.4	31.8	30.0	67.0
7.65	19	1016250	7.08	76.0	241	311	39.5	14.2	31.8	34.0	53.0	31.8	35.8	38.0	79.5
9.00	22	1016259	17.7	102	349	440	44.5	20.6	38.1	44.5	89.0	43.7	41.4	46.0	119
13.5	25	1016268	18.1	102	341	440	44.5	20.6	38.1	44.5	89.0	51.0	51.0	54.0	119
22.5	32	1016277	35.4	127	406	527	51.0	28.7	51.0	60.5	93.5	57.0	58.5	61.0	133
31.5	38	1016286	35.4	127	406	527	51.0	28.7	51.0	60.5	93.5	57.0	58.5	61.0	133

5:1 Design Factor. Individually Proof Tested to 2 times the Working Load Limit.

4

AS-4 Eye & Jaw

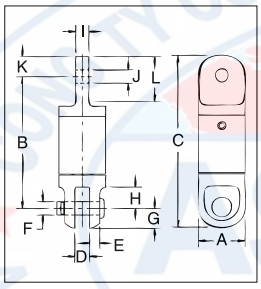

AS-4 EYE & JAW				Dimensions (mm)											
Working Load Limit (t)	Wire Rope Size (mm)	Stock No.	Weight Each (kg)	A	B	C	D	E	F	G	H	I	J	K	L
.40	3	1016306	.14	22.4	63.5	82.5	6.35	4.80	6.35	9.65	10.4	6.35	6.35	9.65	20.6
.68	6	1016314	.41	33.3	92.0	116	7.85	5.60	9.65	11.2	14.2	7.85	9.65	11.0	22.4
1.35	10	1016325	.86	41.4	106	140	12.7	7.10	12.7	17.5	19.8	12.7	16.8	16.0	34.0
2.70	13	1016332	2.09	51.0	157	207	19.1	9.65	19.1	23.9	30.2	19.1	23.1	25.4	51.0
4.50	16	1016343	4.13	63.5	200	259	25.4	13.5	22.4	28.7	36.6	25.4	31.8	30.2	67.0
7.65	19	1016352	7.12	76.0	240	311	39.5	14.2	30.2	34.0	53.0	31.8	35.8	38.1	79.5
9.00	22	1016361	17.7	102	359	451	44.5	20.6	38.1	44.5	89.0	43.7	42.2	46.0	119
13.5	25	1016370	18.1	102	351	451	44.5	20.6	38.1	44.5	89.0	51.0	51.5	54.0	119
22.5	32	1016375	34.0	127	405	527	51.0	28.7	51.0	60.5	93.5	57.0	58.5	60.5	133
31.5	38	1016379	34.0	127	405	527	51.0	28.7	51.0	60.5	93.5	57.0	58.5	60.5	133

5:1 Design Factor. Individually Proof Tested to 2 times the Working Load Limit.

AS-5 Eye & Eye

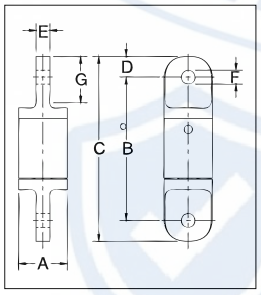

AS-5 EYE & EYE				Dimensions (mm)						
Working Load Limit (t)	Wire Rope Size (mm)	Stock No.	Weight Each (kg)	A	B	C	D	E	F	G
.40	3	1016409	.14	22.4	67.0	86.0	9.65	6.35	6.35	20.6
.68	6	1016418	.41	33.3	95.0	118	11.2	7.85	9.65	22.4
1.35	10	1016427	.82	41.4	110	141	16.0	12.7	16.8	34.0
2.70	13	1016436	1.95	51.0	156	207	25.4	19.1	23.1	51.0
4.50	16	1016445	3.90	63.5	197	270	30.2	25.4	31.8	67.0
7.65	19	1016454	7.00	76.0	237	313	38.1	31.8	35.8	79.5
9.00	22	1016463	16.8	102	353	445	46.0	43.7	41.4	119
13.5	25	1016472	17.7	102	337	445	54.0	51.0	54.0	119
22.5	32	1016481	32.7	127	406	527	60.5	57.0	58.5	133
31.5	38	1016490	32.7	127	406	527	60.5	57.0	58.5	133

5:1 Design Factor. Individually Proof Tested to 2 times the Working Load Limit.

AS-6 Eye & Hook

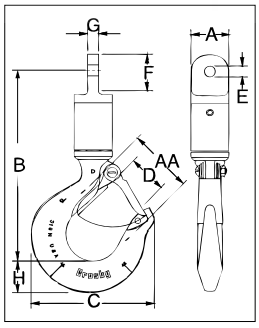

AS-6 EYE & HOOK				Dimensions (mm)									
Working Load Limit (t)	Wire Rope Size (mm)	Stock No.	Weight Each (kg)	A	B	C	D	E	F	G	H	Deformation Indicator AA	Replacement Latch Kit Stock No.
.40	3	1016502	.32	22.4	111	72.5	23.6	6.35	20.6	6.35	18.5	38.1	1096325
.68	6	1016513	.68	33.3	141	80.0	24.6	9.65	22.4	7.85	21.3	38.1	1096374
1.35	10	1016520	1.32	41.4	158	102	29.5	16.8	34.0	12.7	29.0	51.0	1096374
2.70	13	1016529	2.81	51.0	219	123	35.8	23.1	51.0	19.1	36.6	63.5	1096374
4.50	16	1016538	5.62	63.5	274	160	42.9	31.8	67.0	25.4	46.2	76.0	1096562
7.65	19	1016547	10.7	76.0	343	212	61.0	35.6	79.5	31.8	66.0	102	1096657
9.00	22	1016556	23.6	102	459	263	81.0	42.2	119	43.7	76.0	127	1096704
13.5	25	1016565	24.0	102	448	263	81.0	51.5	119	51.0	76.0	127	1096704
22.5	32	1016574	42.6	127	530	346	82.5	59.0	133	57.0	92.0	165	1090161
31.5	38	1016583	62.6	127	610	357	76.0	59.0	133	57.0	116	178	1090189

5:1 Design Factor. Individually Proof Tested to 2 times the Working Load Limit.

Copyright © 2023 The Crosby Group LLC All Rights Reserved

Crosby

AS-7 Bullet Style Jaw & Jaw

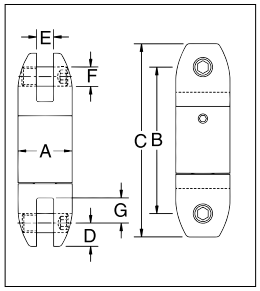

AS-7 BULLET STYLE JAW & JAW				Dimensions (mm)						
Working Load Limit (t)	Wire Rope Size (mm)	Stock No.	Weight Each (kg)	A	B	C	D	E	F	G
.40	3	1016604	.18	22.4	60.5	79.5	9.65	6.35	7.85	10.2
.68	6	1016611	.50	33.3	90.0	113	11.2	7.85	9.65	14.2
1.35	10	1016622	.82	41.4	103	132	14.2	12.7	11.2	20.6
2.70	13	1016631	1.72	51.0	138	179	20.6	19.1	16.0	23.9
4.50	16	1016640	3.63	63.5	197	256	28.7	25.4	22.4	39.5
7.65	19	1016649	6.58	76.0	251	314	31.8	33.3	25.4	54.0
9.00	22	1016652	18.1	102	334	425	44.5	44.5	38.1	82.5
13.5	25	1016658	18.1	102	334	425	44.5	44.5	38.1	82.5
22.5	32	1016662	38.1	127	405	527	60.5	51.0	51.0	93.5
31.5	38	1016667	38.1	127	405	527	60.5	51.0	51.0	93.5

5:1 Design Factor. Individually Proof Tested to 2 times the Working Load Limit.

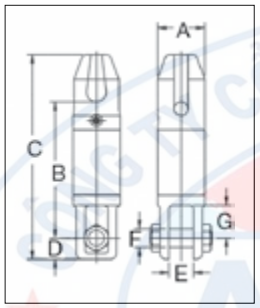

AS-11 Thimble & Jaw

AS-11 THIMBLE & JAW				Dimensions (mm)						
Working Load Limit (t)	Wire Rope Size (mm)	Stock No.	Weight Each (kg)	A	B	C	D	E	F	G
7.65	19	1017020	12.0	76.2	22.0	330	34.0	39.6	30.2	53.1
13.5	25	1017029	24.0	102	296	445	44.5	45.0	38.1	89.0

5:1 Design Factor. Individually Proof Tested to 2 times the Working Load Limit.

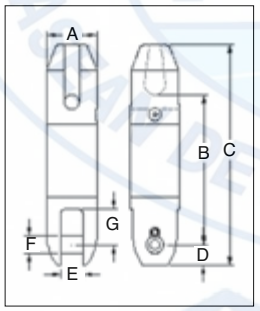

AS-14 Thimble & Bullet

AS-14 THIMBLE & BULLET				Dimensions (mm)						
Working Load Limit (t)	Wire Rope Size (mm)	Stock No.	Weight Each (kg)	A	B	C	D	E	F	G
7.7	20	1017255	9.0	76.2	229	337	31.8	33.3	25.4	54.1
13.6	26	1017258	18.0	102	292	441	44.5	44.5	38.1	82.6
22.7	32	1017261	37.0	127	363	538	60.5	50.8	50.8	93.7

5:1 Design Factor. Individually Proof Tested to 2 times the Working Load Limit.

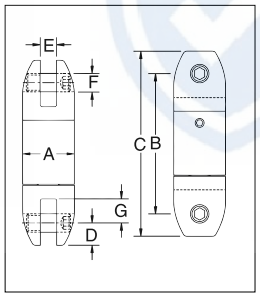

AS-17 Bullet Style Jaw & Jaw Slurry Swivel

AS-17 BULLET JAW & SLURRY SWIVEL				Dimensions (mm)						
Working Load Limit (t)	Wire Rope Size (mm)	Stock No.	Weight Each (kg)	A	B	C	D	E	F	G
7.65	19	8013342	6.57	76.2	257	321	31.8	33.3	25.4	54.1
13.5	25	8013343	18.1	102	343	432	44.5	44.5	38.1	82.5
22.5	32	8013376	38.1	127	410	531	60.5	51.0	51.0	93.7
31.5	38	8013344	38.1	127	410	531	60.5	51.0	51.0	93.7
40.5	-	2016585	68.0	152	514	666	76.2	64.3	57.2	69.9

5:1 Design Factor. Individually Proof Tested to 2 times the Working Load Limit.

Copyright © 2023 The Crosby Group LLC All Rights Reserved

BK Safety Hook

The Original

In 1965, the innovative Gunnebo Industries BK Safety Hook increased job site safety in the construction industry. Today the BK Safety Hook is the foundation of the renowned BK product family.

Watch a BK Safety Hook with Double Latch BKD demo at **thecrosbygroup.com/BKBKDdemo**

Clear markings

- Country of origin.
- Traceability codes.
- Model, size, and grade.

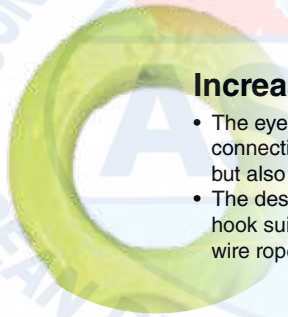

Increased flexibility

- The eye design enables connection to not only G-links, but also C-links and Berglok.
- The design makes the BK hook suitable for steel wire ropes.

Flat section

- For attachment to other GrabiQ or wire components.

Heavy duty rivet

- Recessed rivet for a slim design.
- Decreases the risk of snagging.
- Ideal in narrow spaces.

Latch rotation stop

- Protects the trigger mechanism from damage.

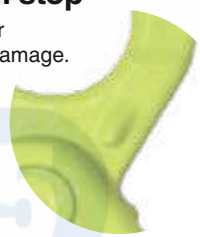

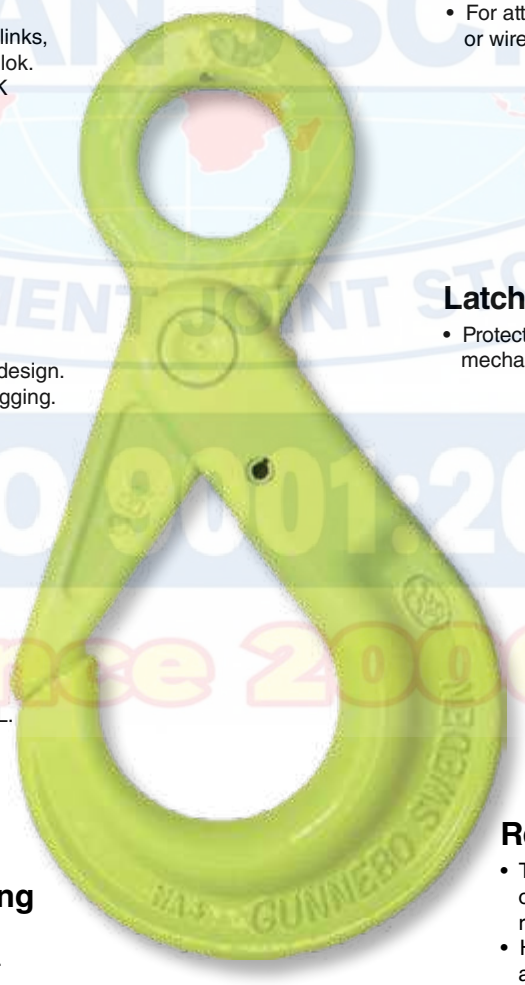

Quality is top priority

- Fatigue tested.
- Forged alloy steel.
- Hardened and tempered.
- Every hook is individually proof-loaded at 2.5 x WLL.
- Full traceability back to the raw material.

Replaceable trigger set

- Quick and easy assembly.
- Available as a complete spare part kit.

Precision manufacturing

- Perfect fit between the parts.
- Increases safety during operation.

Recessed trigger

- To avoid the trigger from snagging or being damaged, it has been recessed into the body of the hook.
- Helps to prevent the latch from accidentally opening.

Fluorescent color

- For high visibility in the field.

Copyright © 2023 The Crosby Group LLC All Rights Reserved

Safety Hook BK

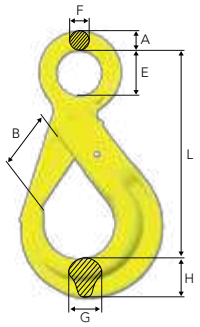

The "original" safety hook with eye connector.

Stock No.	Code	WLL (t)	Dimensions (mm)							Weight (kg)
			A	L	B	E	F	G	H	
Z101108	BK-6-10	1.5	12	109	29	22	10	15	21	0.5
Z101097	BK-7/8-10	2.6	14	138	37	28	11	17	26	0.9
Z101024	BK-10-10	4.0	16	168	45	34	13	21	31	1.5
Z101032	BK-13-10	6.8	20	207	55	44	16	30	40	3.0
Z101040	BK-16-10	10.3	26	254	62	56	20	37	50	5.5
Z101089	BK-18/20-10	16.0	30	289	68	60	22	44	64	9.0
Z101325	BK-22-10	20.0	32	320	80	70	24	50	64	11.3
Z101326	BK-26-10	27.3	35	342	100	80	25	54	68	16.5

Fulfills requirements in: EN 1677:2008 (WLL +25%), ASTM A952/A952M.
For larger sizes, see Classic Grade 8.
4:1 Design Factor

Safety Hook OBK

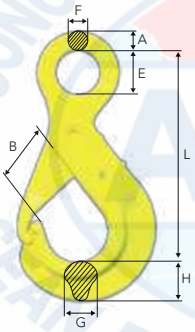

Safety hook with eye connector and grip latch.

Stock No.	Code	WLL (t)	Dimensions (mm)							Weight (kg)
			A	L	B	E	F	G	H	
Z101048	OBK-6-10	1.5	12	103	26	22	9	15	17	0.4
Z101143	OBK-7/8-10	2.6	14	139	37	28	10	20	22	0.8
Z101145	OBK-10-10	4.0	16	170	47	34	13	22	29	1.3
Z101147	OBK-13-10	6.8	21	206	53	44	15	29	38	2.6
Z101141	OBK-16-10	10.3	26	251	68	56	19	29	45	4.4
Z101240	OBK-18/20-10	16.0	28	293	74	60	22	44	56	8.3

For larger sizes see Classic Grade 8(OBK-22-8). Fulfills requirements in: EN 1677:2008 (WLL +25%), ASTM A952/A952M.
4:1 Design Factor. For larger sizes see Classic Grade 8 (OBK-22-8).

Safety Hook BKD

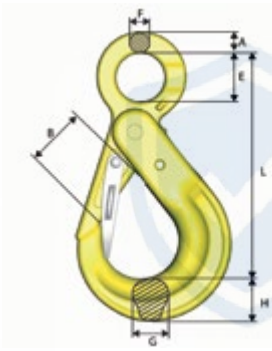

Double latch BK-hook with recessed trigger. Should the first hook latch accidentally open, either through direct impact or excessive wear on the trigger, the extra latch is there to retain the load safely. The secondary latch is designed to be easily operated and will not cause inconvenience for the operator.

Stock No.	Code	WLL (t)	Dimensions (mm)							Weight (kg)
			A	L	B	E	F	G	H	
Z101154	BKD-13-10	6.8	20	207	44	44	16	30	40	3.2
Z101155	BKD-16-10	10.3	26	254	48	56	20	37	50	5.8
Z101156	BKD-18/20-10	16.0	30	289	52	60	22	46	62	9.1
Z101373	BKD-26-10	27.3	35	342	72	80	25	54	68	16.8

Fulfills requirements in: EN 1677:2008 (WLL +25%), ASTM A952/A952M.
4:1 Design Factor

Shank Safety Hook BKT

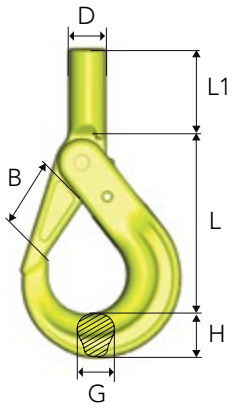

Safety hook with shank ready for customized machines.

Stock No.	Code	WLL (t)	Dimensions (mm)							Weight (kg)
			L	B	L1	D	d min	G	H	
Z1011120	BKT-6-10	1.5	90	29	36	20	11	15	21	0.5
Z1011020	BKT-7/8-10	2.6	111	37	47	24	13	17	26	0.9
Z1010690	BKT-10-10	4.0	133	45	51	29	16	21	31	1.6
Z1010710	BKT-13-10	6.8	160	55	77	34	20	30	39	3.0

Fulfills requirements in: EN 1677:2008 (WLL +25%), ASTM A952/A952M.
d min = the smallest permitted shank dimension after machining.
Note! After machining of the shank, proof loading must be carried out.
4:1 Design Factor

Copyright © 2023 The Crosby Group LLC All Rights Reserved

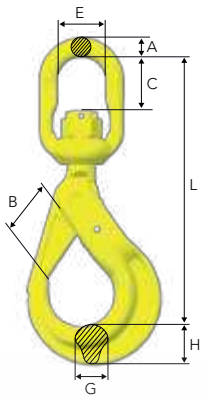

Swivel Safety Hook BKL

Safety hook with swivel for improved positioning of the hook before the load is lifted (360º rotation).

Stock No.	Code	WLL (t)	Dimensions (mm)							Weight (kg)
			L	B	C	E	A	G	H	
Z101114	BKL-6-10	1.5	149	29	23	33	11	15	21	0.7
Z101104	BKL-7/8-10	2.6	183	37	27	38	12	17	26	1.2
Z101028	BKL-10-10	4.0	218	45	37	44	15	21	31	2.0
Z101036	BKL-13-10	6.8	282	55	49	48	19	30	40	4.0
Z101044	BKL-16-10	10.3	341	62	65	61	25	37	50	7.2
Z101093	BKL-18/20-10	16.0	368	68	70	72	31	44	62	11.4

Fulfills requirements in: EN 1677:2008 (WLL +25%), ASTM A952/A952M.
4:1 Design Factor

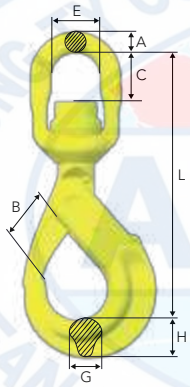

Swivel Safety Hook BKLK

Safety hook with ball-bearing for 360º rotation under full WLL.

Stock No.	Code	WLL (t)	Dimensions (mm)							Weight (kg)
			L	B	C	E	A	G	H	
Z101116	BKLK-6-10	1.5	149	29	24	33	11	15	21	0.7
Z101106	BKLK-7/8-10	2.6	183	37	27	38	12	17	26	1.2
Z101030	BKLK-10-10	4.0	218	45	35	44	15	21	31	2.0
Z101038	BKLK-13-10	6.8	280	55	45	48	19	30	40	4.0
Z101046	BKLK-16-10	10.3	339	62	62	61	25	37	50	7.3
Z101095	BKLK-18/20-10	16.0	368	68	60	72	31	44	62	11.5
Z101294	BKLK-22-10	20.0	436	79	80	80	35	50	62	16.8
Z101295	BKLK-26-10	27.3	486	100	110	102	45	54	68	26.0

Fulfills requirements in: EN 1677:2008 (WLL +25%), ASTM A952/A952M.
For larger sizes, see Classic Grade 8.

4:1 Design Factor

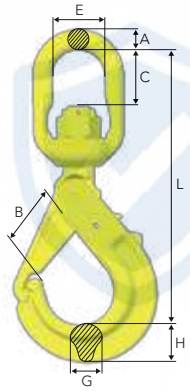

Swivel Safety Hook with Griplatch LBK

Safety hook with griplatch and swivel for improved positioning of the hook before the load is lifted (360º rotation).

Stock No.	Code	WLL (t)	Dimensions (mm)							Weight (kg)
			L	B	C	E	A	G	H	
Z100978	LBK-7/8-10	2.6	177	37	27	38	12	20	22	1.1
Z100960	LBK-10-10	4.0	214	47	37	44	15	22	29	1.8
Z100993	LBK-13-10	6.8	262	53	45	48	19	29	38	3.5
Z100995	LBK-16-10	10.3	324	68	66	61	25	30	45	5.9

Fulfills requirements in: EN 1677:2008 (WLL +25%), ASTM A952/A952M.
4:1 Design Factor

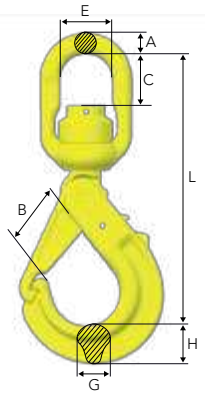

Swivel Safety Hook with Griplatch LKBK

Safety hook with griplatch and ball-bearing for 360º rotation under full WLL.

Stock No.	Code	WLL (t)	Dimensions (mm)							Weight (kg)
			L	B	C	E	A	G	H	
Z100980	LKBK-7/8-10	2.6	176	37	27	38	12	20	22	1.1
Z100962	LKBK-10-10	4.0	213	47	35	44	15	22	29	1.9
Z100997	LKBK-13-10	6.8	261	53	43	48	19	29	38	3.6
Z100999	LKBK-16-10	10.3	323	68	61	61	25	30	45	6.2

Fulfills requirements in: EN 1677:2008 (WLL +25%), ASTM A952/A952M.
4:1 Design Factor

Copyright © 2023 The Crosby Group LLC All Rights Reserved

Sling Hook EK

Sling hook with eye connector.

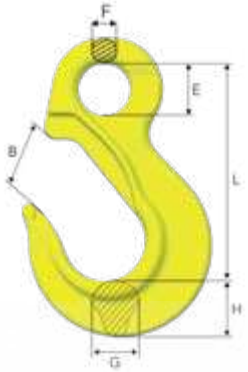

Stock No.	Code	WLL (t)	Dimensions (mm)						Weight (kg)
			L	B	E	F	G	H	
Z101162	EK- 6-10	1.5	93	29	23	10	17	20	0.4
Z101164	EK- 7/8-10	2.6	108	32	28	12	17	23	0.5
Z101166	EK-10-10	4.0	134	41	34	14	23	30	0.9
Z101168	EK-13-10	6.8	166	49	44	18	28	38	2.0
Z101170	EK-16-10	10.3	203	61	56	22	36	47	3.3
Z101306	EK-20-10	16.0	229	71	61	26	42	60	6.2
Z101307	EK-22-10	20.0	267	82	64	31	43	67	8.5
Z101308	EK-26-10	27.3	301	95	66	32	51	75	12.1
Z101309	EK-32-10	40.0	353	105	90	38	61	98	24.6

4:1 Design Factor. Fulfills requirements in: EN 1677:2008 (WLL +25%), ASTM A952/A952M-02.

Sling Hook EKN (with latch)

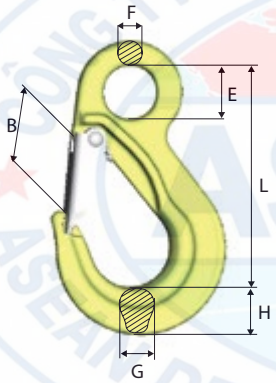

Stock No.	Code	WLL (t)	Dimensions (mm)						Weight (kg)
			L	B	E	F	G	H	
Z101128	EKN- 6-10	1.5	93	25	23	10	17	20	0.4
Z101130	EKN- 7/8-10	2.6	108	26	28	12	17	23	0.6
Z101132	EKN-10-10	4.0	134	37	34	14	23	30	1.0
Z101134	EKN-13-10	6.8	166	42	44	18	28	38	2.1
Z101136	EKN-16-10	10.3	203	53	56	22	36	47	4.0
Z101327	EKN-20-10	16.0	229	60	61	26	42	60	6.4
Z101328	EKN-22-10	20.0	267	73	64	31	43	67	8.9
Z101329	EKN-26-10	27.3	301	82	66	32	51	75	13.0
Z101330	EKN-32-10	40.0	353	96	90	38	61	98	25.0

Fulfills requirements in: EN 1677:2008 (WLL +25%), ASTM A952/A952M.
4:1 Design Factor

Container Hook CH

Made for lifting containers in their lower fittings.

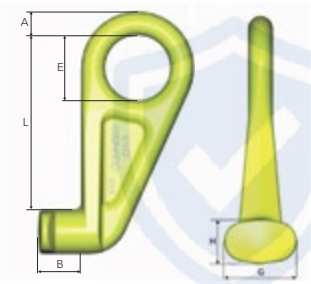

Stock No.	Code	WLL (t)	Dimensions (mm)						Weight (kg)
			A	L	E	B	H	G	
Z101220	CH-3	12.5	25	187	70	46	47	75	3.8
Z101221	CH-3, 45° left	12.5	25	187	70	46	47	75	3.8
Z101219	CH-3, 45° right	12.5	25	187	70	46	47	75	3.8

4:1 Design Factor

Alt. 1 - Straight lift

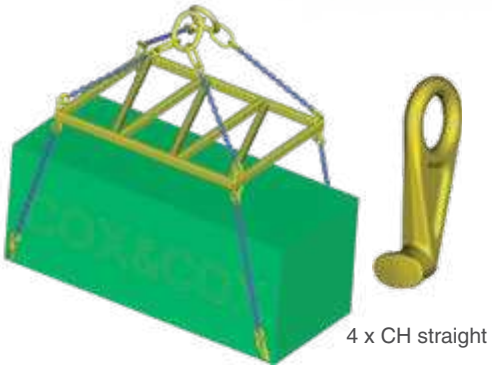

4 x CH straight

Alt. 2 - Angular lift

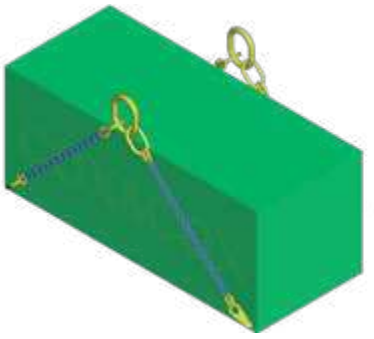

2 x CH turned 45° right

+

2 x CH turned 45° left

Copyright © 2023 The Crosby Group LLC All Rights Reserved

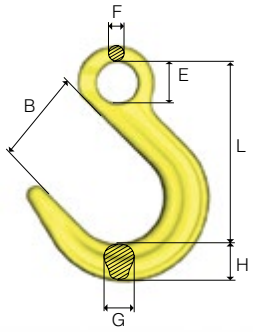

Foundry Hook OKE

Stock No.	Code	WLL (t)	Dimensions (mm)						Weight (kg)
			L	B	E	F	G	H	
Z100853	OKE-7/8-10	2.6	124	63	28	12	21	26	0.8
Z100854	OKE-10-10	4.0	151	76	34	15	26	30	1.4
Z100855	OKE-13-10	6.8	184	90	44	19	33	39	2.8
Z100898	OKE-16-10	10.3	218	102	56	23	40	46	4.9
Z101340	OKE-20-10	16.0	247	114	60	27	46	60	7.2
Z101341	OKE-22-10	20.0	275	120	64	31	60	70	11.3
Z101342	OKE-26-10	27.3	300	113	70	35	64	77	16.0

Fulfills requirements in: EN 1677:2008 (WLL +25%), ASTM A952/A952M.
For larger sizes, see Classic Grade 8.
4:1 Design Factor

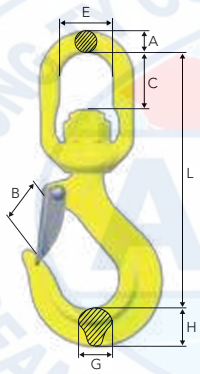

Swivel Latch Hook LKN

Sling hook with swivel for improved positioning of the hook before the load is lifted (360º rotation).

Stock No.	Code	WLL (t)	Dimensions (mm)							Weight (kg)
			L	B	C	E	A	G	H	
Z101345	LKN-7/8-10	2.6	155	28	28	38	12	18	24	0.8
Z101346	LKN-10-10	4.0	192	35	37	44	15	23	31	1.5
Z101347	LKN-13-10	6.8	238	40	47	48	19	28	38	3.1
Z101348	LKN-16-10	10.3	295	53	65	61	25	34	43	5.3

Fulfills requirements in: EN 1677:2008 (WLL +25%), ASTM A952/A952M.
4:1 Design Factor

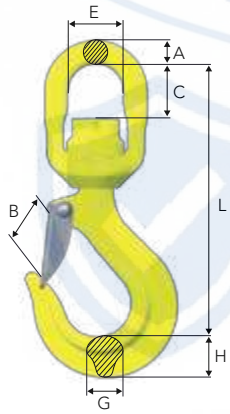

Swivel Latch Hook LKNK

Swivel latch hook with ball bearing for 360º rotation under full WLL.

Stock No.	Code	WLL (t)	Dimensions (mm)							Weight (kg)
			L	B	C	E	A	G	H	
Z101349	LKNK-7/8-10	2.6	154	28	28	38	12	18	24	0.9
Z101350	LKNK-10-10	4.0	191	35	35	44	15	23	31	1.6
Z101351	LKNK-13-10	6.8	236	40	45	48	19	28	38	3.3
Z101352	LKNK-16-10	10.3	293	53	62	61	25	34	43	5.6
Z101354	LKNK-22-10	20.0	400	74	80	80	35	43	67	15.1

Fulfills requirements in: EN 1677:2008 (WLL +25%), ASTM A952/A952M.
4:1 Design Factor

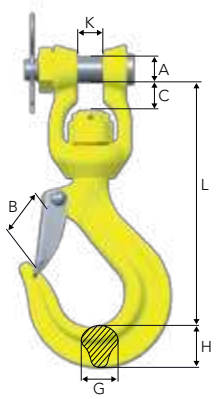

Clevis Swivel Hook LKNG

For direct connection to small cranes or similar applications that require positioning of hook.
Swivel for improved positioning (360°).

Stock No.	Code	WLL (t)	Dimensions (mm)							Weight (kg)
			L	B	C	A	G	H	K	
Z101353	LKNG-16-10	10.3	258	53	30	28	34	43	27	5.7

Fulfills requirements in: EN 1677:2008 (WLL +25%), ASTM A952/A952M.
4:1 Design Factor

Copyright © 2023 The Crosby Group LLC All Rights Reserved

GUNNEBO Industries

Swivel Safety Hook BKLK Offshore HDG

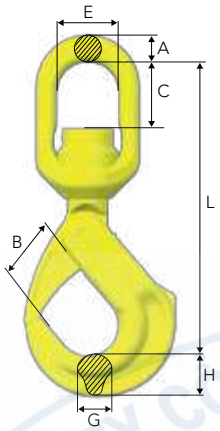

Stock No.	Code	WLL (t) 4:1	WLL (t) 5:1	Dimensions (mm)							Weight (kg)
				L	B	C	E	A	G	H	
ZG101370	BKLK-13-8 OS W HDG	6.7	5.4	307	55	72	61	25	30	40	4.9
ZG101371	BKLK-16-8 OS W HDG	10.3	8.2	365	62	88	82	26	37	50	8.4
ZG1013561	BKLK-18/20-8 OS W HDG	16.0	12.8	395	68	88	80	35	46	64	13.9
ZG101294	BKLK-22-8 OS HDG	20.0	16.0	436	79	80	80	35	50	62	16.8
ZG101295	BKLK-26-8 OS HDG	27.3	21.6	486	100	110	102	45	54	68	26.5
ZG101344	BKLK-32-8 OS HDG	32.8	26.2	533	120	110	102	45	62	86	32.3
	With double latch										
ZGS1167	BKLKD-13-8 OS W HDG	6.7	5.4	307	43	72	61	25	30	40	5.0
ZGS1168	BKLKD-16-8 OS W HDG	10.3	8.2	365	48	88	82	26	37	50	8.8
ZGS1169	BKLKD-18/20-8 OS W HDG	16.0	12.8	395	52	88	80	35	46	64	14.3

Manufactured according to requirements in: DNV 2.7-1:2013, DNVGL-ST-0377:2016, DNVGL-ST-0388:2016 and NORSOK R-002:2017.

Safety Hook BK & BKLK Offshore with Double Latch

With recessed trigger

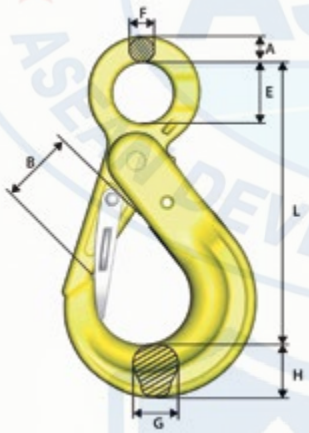

Due to the motion of the sea when loading and unloading offshore, direct impact on the hook could cause the latch to unintentionally open when not being under load, risking the load to unhitch. The double latch safety hook has an extra latch retaining the load in this case.

Stock No.	Code	WLL (t)	Dimensions (mm)							Weight (kg)
			A	L	B	E	F	G	H	
Z101154	BKD-13-10	6.8	20	207	44	44	16	30	40	3.2
Z101155	BKD-16-10	10.3	26	254	48	56	20	37	50	5.8
Z101156	BKD-18/20-10	16.0	30	289	52	60	22	46	62	9.1
Z101373	BKD-26-10	27.3	35	342	72	80	25	54	68	16.8

4:1 Design Factor

Double Latch
Should the hook latch accidentally open, either through direct impact or excessive wear on the trigger, the extra latch is there to retain the load safely. The extra latch is designed to be easily operatad.

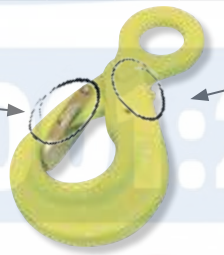

Recessed Trigger
To avoid the trigger from being hit or damaged it has been recessed into the hook. This prevents the latch further from accidentally opening.

Safety Hook BK Offshore

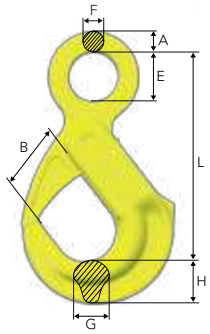

Stock No.	Code	WLL (t) 4:1	WLL (t) 5:1	Dimensions (mm)						Weight (kg)
				L	B	E	F	G	H	
ZG101355	BK-26-8 OS HDG	27.3	21.6	342	100	80	25	54	68	16.5
ZG101364	BK-32-8 OS HDG	32.8	26.2	400	120	90	30	62	86	23.3

Offshore material, impact toughness > 20 ft-lb (42 J) at -4ºF.

Manufactured according to requirements in: DNV 2.7-1:2013, DNVGL-ST-0377:2016, DNVGL-ST-0388:2016 and NORSOK R-002:2017

Copyright © 2023 The Crosby Group LLC All Rights Reserved

Increased safety in heavy lifting operations

The WRIN STR Handle provides additional safety to the Gunnebo Industries BK Safety Hook family.

Improved workplace safety

- With the WRIN STR Handle, the operator opens and closes the safety hook without placing their hands inside the hook, resulting in a reduced risk of personal injury on job sites. The handle is easily mounted to the safety hook, without compromising the integrity of design and capabilities of the hook.

Suitable to any safety hook within the BK family

- The WRIN STR Handle is easily mounted to any safety hook within the BK family.
- For sling shops the WRIN STR Handle is the perfect complement to the BK safety hooks, reducing the need for stocking a large assortment of different safety hooks.
- If the handle is fully operable, it can be mounted and reused on a new hook if the existing hook is worn out.

Unique design

- The handle will keep the integrity of the hook's design and capabilities uncompromised.
- The handle is clamped to the hook and fixed by the hook's trigger pin.
- Hole for attaching a lead line for easy retrieval.
- Made of stainless steel according to AISI 316.

WRIN STR Handle

Suitable to any safety hook within the Gunnebo Industries BK family.

Stock No.	Code	Hook size (mm)	Dimensions (mm)				Suits the following safety hooks:	Weight (kg)
			L	H	B	G		
Z101413	STRG13	13	145	103	60	184	BK, BKD, BKG, BKL, BKLK, BKLKD	0.75
Z101414	STRG16	16	182	140	80	255	BK, BKD, BKG, BKL, BKLK, BKLKD	1.90
Z101415	STRG20	18/20	194	155	90	280	BK, BKD, BKG, BKL, BKLK, BKLKD	2.50
Z101416	STRG22	22	203	164	90	300	BK, BKLK	2.60
Z101417	STRG26	26	215	192	103	348	BK, BKLK	3.45
Z101418	STRG32	32	263	179	103	380	BK, BKLK	3.90

Material: Stainless steel according to AISI 316.

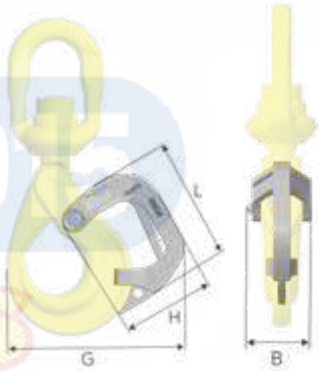

Hot-dip galvanized (HDG) hooks for offshore harsh environments. Watch video at **thecrosbygroup.com/HDGhooks**

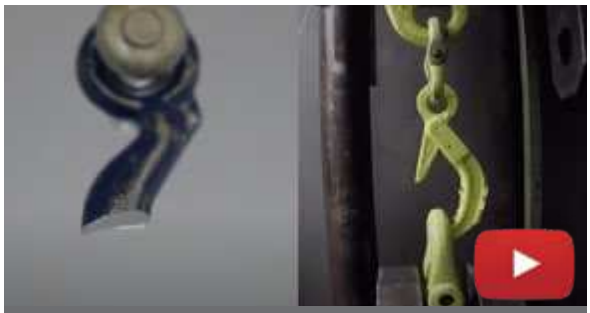

Understanding the importance of high ductility in lifting equipment. Watch video at **thecrosbygroup.com/ductility**

Copyright © 2023 The Crosby Group LLC All Rights Reserved

GUNNEBO Industries

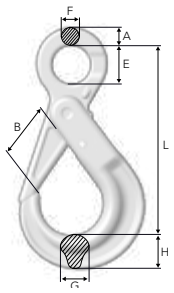

Safety Hook BK HDG

Stock No.	Code	WLL (t)	Dimensions (mm)							Weight (kg)
			A	L	B	E	F	G	H	
ZG101108	BK-6-8 HDG	1.12	12	109	29	22	10	15	21	0.5
ZG101097	BK-7/8-8 HDG	2.0	14	138	37	28	11	17	26	0.9
ZG101024	BK-10-8 HDG	3.2	16	168	45	34	13	21	31	1.5
ZG101032	BK-13-8 HDG	5.4	20	207	55	44	16	30	40	3.0

4:1 Design Factor

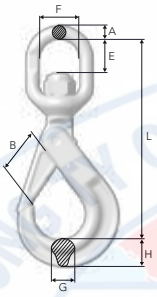

Swivel Safety Hook BKL HDG

Stock No.	Code	WLL (t)	Dimensions (mm)							Weight (kg)
			L	B	C	E	A	G	H	
ZG101028	BKL-10-8 HDG	3.2	218	45	37	44	15	21	31	2.0
ZG101036	BKL-13-8 HDG	5.4	282	55	49	48	19	30	40	4.0
ZG101044	BKL-16-8 HDG	8.2	344	62	68	61	25	37	50	7.3

4:1 Design Factor

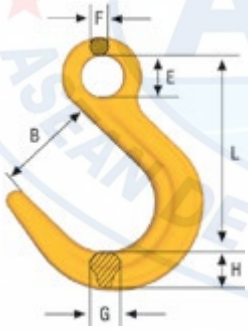

Foundry Hook OKE

Stock No.	Code	WLL (t)	Dimensions (mm)						Weight (kg)
			L	B	E	F	G	H	
Z645564	OKE-32-8	32.8	384	145	90	42	77	94	30

Fulfills requirements in: EN 1677:2008, ISO 8539:2009, ASTM A952/A952M and AS 3776:2015.
4:1 Design Factor

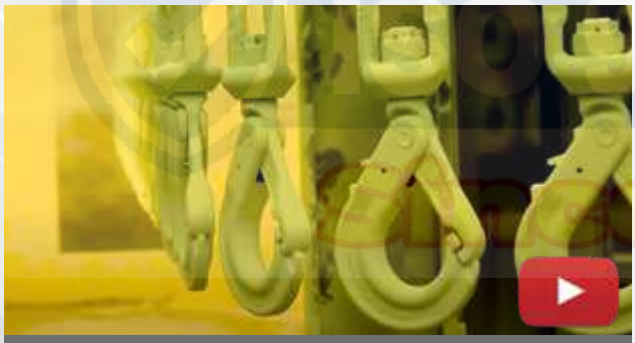

Surface Treatment Production I Växjö, Sweden

BEHIND THE SCENES

Get a behind-the-scenes look at the innovative processes to manufacture the world's leading rigging, lifting, and load securement hardware.

Watch all videos at thecrosbygroup.com/facilities

Collaborative Robot I Växjö, Sweden

Testing & Inspection I Växjö, Sweden

Copyright © 2023 The Crosby Group LLC All Rights Reserved

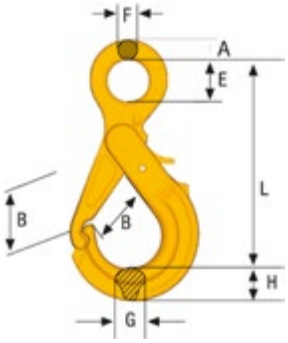

Safety Hook with Griplatch OBK

Stock No.	Code	WLL (t)	Dimensions (mm)							Weight (kg)
			A	L	B	E	F	G	H	
Z100218	OBK-22-8	15.5	30	335	87	70	24	40	58	10.2

Fulfills requirements in: EN 1677:2008, ISO 8539:2009, ASTM A952/A952M and AS 3776:2015.
4:1 Design Factor

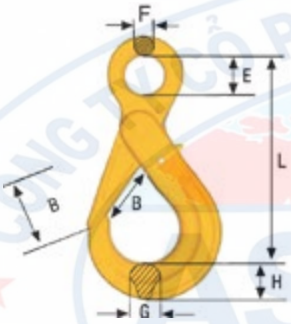

Safety Hook BK

Stock No.	Code	WLL (t)	Dimensions (mm)						Weight (kg)
			L	B	E	F	G	H	
Z101357	BK-32-8	32.8	400	120	90	30	62	86	23.8

Fulfills requirements in: EN 1677:2008, ISO 8539:2009, ASTM A952/A952M and AS 3776:2015.
4:1 Design Factor

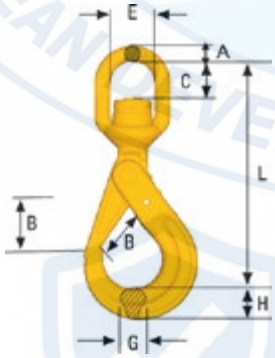

Swivel Safety Hook BKLK

Safety hook with ball-bearing for 360° rotation under full load.

Stock No.	Code	WLL (t)	Dimensions (mm)							Weight (kg)
			L	B	C	E	A	G	H	
Z101344	BKLK-32-8	32.8	533	120	110	102	45	62	86	32.3

Fulfills requirements in: EN 1677:2008, ISO 8539:2009, ASTM A952/A952M and AS 3776:2015.
4:1 Design Factor

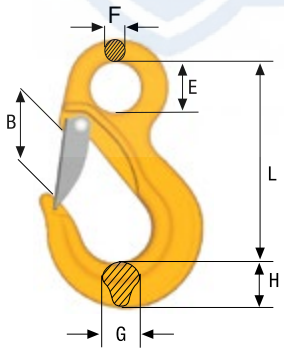

Sling Hook EK (without latch) and EKN (with latch)

Stock No.	Code	WLL (t)	Dimensions (mm)						Weight (kg)
			L	B	E	F	G	H	
Z100720	EK-32-8	32.8	333	105	76	38	61	80	17.7
Z100725	EKN-32-8	32.8	333	93	76	38	61	80	17.9

Fulfills requirements in: EN 1677:2008, ISO 8539:2009, ASTM A952/A952M and AS 3776:2015.
4:1 Design Factor

Copyright © 2023 The Crosby Group LLC All Rights Reserved

GUNNEBO Industries

Universal weld-on hook, UKN

The original excavator hook

Excavators are often used for material handling and lifting because they are available on most construction sites. However, rigging gear is often incorrectly attached, either to the teeth of the bucket or directly on the excavator arm, which is a dangerous practice that can lead to accidents.

The Gunnebo Industries UKN Hook was developed in 1975 – a solution that transformed the excavator into a lifting crane. The UKN Hook has been fitted to excavators and other applications for almost 50 years, either as an aftermarket product or directly by the manufacturer.

Today the UKN is the hook of choice for leading international excavator manufacturers.

Quality

- Forged alloy steel.
- Hardened and tempered.

100% proof-loaded

- Every hook is individually proof-loaded at 3 x WLL.

High durability

- Forged.
- Rated with a 5:1 safety factor.

Clear markings

- Country of origin.
- Traceability code.
- Model and size.

Heavy duty latch

- Latch with handles for easy opening.
- Hardened and tempered.

Prepared for welding

- Base plate prepared for welding.

Pin & spring

- Spring protection.
- Hardened and tempered hinge pin.
- Stainless steel spring.

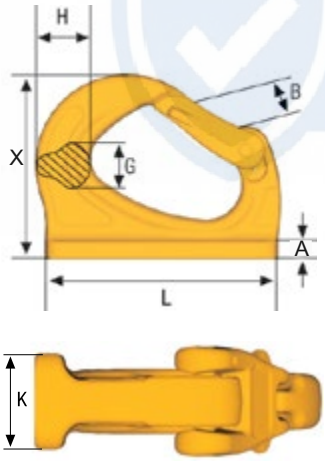

Universal Weld-On Hook - UKN

Stock No.	Code	WLL metric tonnes**	Dimensions (mm)							Weight (kg)
			B	G	H	K	L	A	X	
Z1002560	UKN-0.75*	0.75	20	13	20	19	81.5	5	56	0.2
Z6511810	UKN-1*	1.0	27	17	25	25	95	6	72	0.6
Z7009060	UKN-2*	2.0	33	20	30	30	114	8	86	0.9
Z6455730	UKN-3	3.0	30	23	32	35	132	10	105	1.3
Z6521160	UKN-4	4.0	30	29	38	42	140	11	114	2.0
Z6455800	UKN-5	5.0	34	30	47	45	165	12	131	3.2
Z6515390	UKN-8	8.0	34	40	51	50	172	13	133	3.6
Z6456030	UKN-10	10.0	47	43	58	55	220	14	170	8.2
Z1007850	UKN-15	15.0	55	50	67	60	240	15	188	9.8
Z1007851	UKN-20	20.0	65	60	85	60	275	15	207	12.4

* Welding plate slightly curved
** Design factor 5:1

Fulfills requirements in: EN 474-1.

Copyright © 2023 The Crosby Group LLC All Rights Reserved

Spare Part RD BK

(with assembly kit)

Set for BK/BKG Safety hooks consisting of trigger, stainless steel spring, retaining pin and assembly kit.

Recessed trigger

Stock No.	Code	Weight (kg)
Z100282	RDBK-6	0.02
Z100283	RDBK-8	0.03
Z100284	RDBK-10	0.03
Z100285	RDBK-13	0.05
Z100286	RDBK-16	0.10
Z100297	RDBK-18/20	0.21
Z100287	RDBK-22	0.20
Z100280	RDBK-26	0.50
Z100294	RDBK-32	0.70

Standard trigger (long trigger)

Stock No.	Code	Weight (kg)
Z1002820	RDBK-6	0.01
Z1002830	RDBK-7/8	0.03
Z1002840	RDBK-10	0.03
Z1002850	RDBK-13	0.05
Z1002860	RDBK-16	0.12

Spare Part RD OBK/GBK

(with assembly kit)

Set for OBK/GBK Safety hooks consisting of trigger, stainless steel spring, retaining pin and assembly kit.

Stock No.	Code	Weight (kg)
Z100281	RDOBK-6	0.02
Z100288	RDOBK-7/8	0.03
Z100289	RDOBK-10	0.03
Z100290	RDOBK-13	0.05
Z100291	RDOBK-16	0.08
Z100297	RDBK-18/20	0.21
Z100323	RDBK-22	0.35

Spare Part RD BKD/BKLKD

(with assembly kit)

Set for BKD/BKLD Safety hooks consisting of trigger, stainless steel spring, retaining pin and assembly kit.

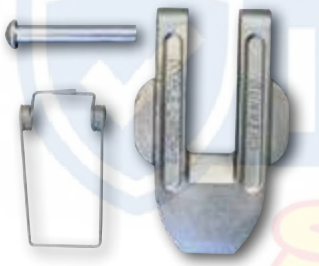

Stock No.	Code	Weight (kg)
Z101157	RDBKD-13 double latch	0.22
Z101158	RDBKD-16 double latch	0.42
Z101159	RDBKD-18/20 double latch	0.47

Spare Part RD GKN/OKN

Set for GKN/OKN Safety hooks consisting of trigger, stainless steel spring, retaining pin and assembly kit.

Stock No.	Code	Weight (kg)
Z622175	RDGKN/OKN-7/8-8	0.05
Z622183	RDGKN/OKN-10-8	0.09
Z622206	RDGKN/OKN-13-8	0.13
Z622214	RDGKN-16-8	0.22

Copyright © 2023 The Crosby Group LLC All Rights Reserved

Spare Part RD LKNG

Stock No.	Code	Weight (kg)
Z700495	RDLKNG-16 Bolt and Nut	0.7
B60122	RDLKNG-16 Bronze Washer and Retaining pin	0.03

Spare Part LKN / LKNK / EKN / OKN / EGKN / RH / ESKN

Set consisting of latch, stainless steel spring, and rivet.

Stock No.	Code	Weight (kg)
Z100445	RDEKN- 6 / OKN / RH 1	0.03
Z100447	RDEKN- 7/8 /LKN / RH 2	0.05
Z100450	RDEKN-10 / LKN / RH 3	0.06
Z100449	RDEKN-13 / LKN / RH 5	0.13
Z100217	RDEKN-16 / LKN	0.20
Z100453	RDEKN-18/20	0.26
Z100452	RDEKN-22	0.42
Z100742	RDEKN-26	0.53
Z100743	RDEKN-32	0.60

Spare Part Set SKN, OKN and LKN (old version)

Set consisting of latch, stainless steel spring, and rivet.

Stock No.	Code	Weight (kg)
Z420581	RDSKN/LKN-7/8-8	0.05
Z420688	RDSKN/LKN-10-8	0.10
Z420785	RDSKN/LKN-13-8	0.14
Z420989	RDSKN/OKN-16-8	0.22
Z421087	RDSKN/OKN-18/20-8	0.27
Z700698	RDOKN-22-8	0.48

Spare Part UKN

Spare part set RDUKN (msp) consisting of forged latch, pin, stainless steel spring, and retaining pin.

Stock No.	Code	Weight (kg)	UKN Part Number	UKN Code
Z100258	RDUKN-0.75	0.06	Z1002560	UKN- 0,75
Z700264	RDUKN-1	0.12	Z6511810	UKN- 1
Z700958	RDUKN-2	0.20	Z7009060	UKN- 2
Z700266	RDUKN-3/4	0.20	Z6455730, Z6521160	UKN- 3, UKN- 4
Z700268	RDUKN-5/8	0.36	Z6455800, Z6515390	UKN- 5, UKN- 8
Z700269	RDUKN-10	0.88	Z6456030	UKN-10
Z700984	RDUKN-15/20	1.20	Z1007850, Z1007851	UKN-15, UKN-20

Copyright © 2023 The Crosby Group LLC All Rights Reserved

MASTER LINKS

The Crosby Group offers a wide range of links, from small 0.8 tonne capacities all the way up to 179 tonnes, as well as application-specific links, such as the hot-dip galvanized master links for use in highly corrosive environments.

ASEAN JSC.VN
ASEAN DEVELOPMENT JOINT STOCK COMPANY
ISO 9001:2015
Since 2006

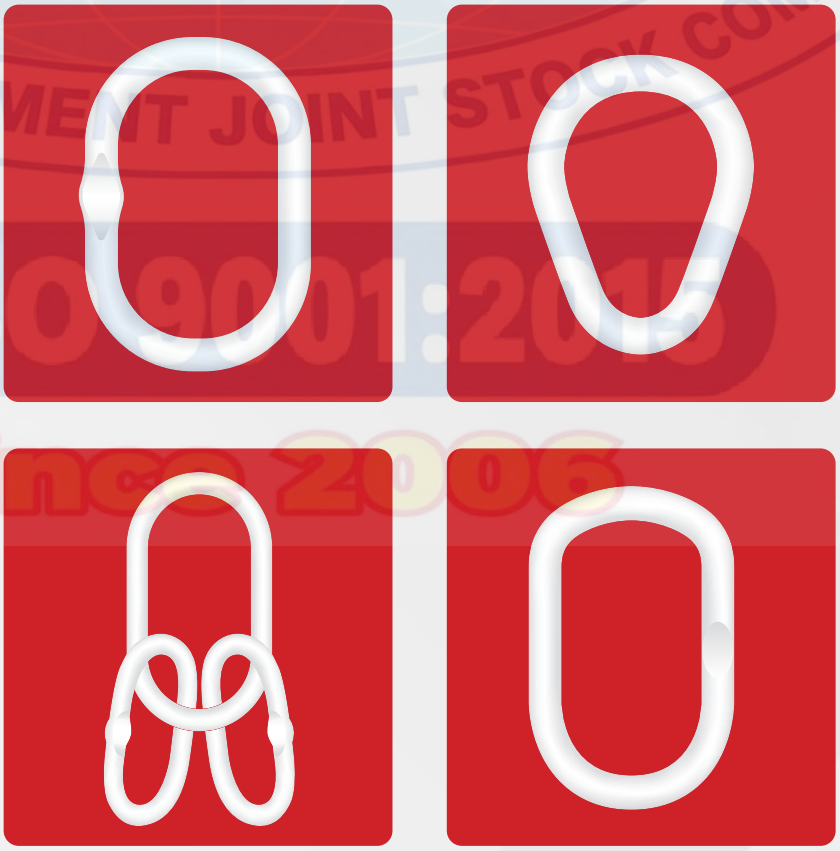

thecrosbygroup

thecrosbygroup.com

Crosby

A-1343

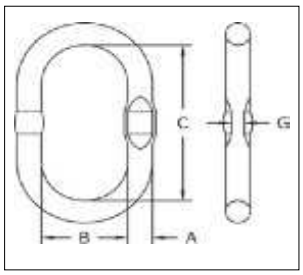

- Alloy steel — Quenched & Tempered.
- Individually Proof Tested to values shown, with certification.
- Design Factor of 5 to 1.
- Proof Tested with 70% inside width special fixtures sized to prevent localized point loading per EN 1677-4, reference applications & warnings.
- Each main link is marked with Product Identification Code (PIC) for material traceability, Grade, CE, chain size and the "CG" (Crosby Group).
- A-1343 master links are type approved to DNV Certification. Notes 2.7-1- Offshore Containers. These Crosby master links are 100% proof tested. Every batch is impact tested. The tests are conducted by Crosby and 3.1 test certification is available upon request.
- Engineered Flat for use with S-1325A coupler link.
- Fatigue rated to 20,000 cycles at 1.5 times the Working Load Limit.
- Meets or exceeds all requirements of ASME B30.26 including identification, ductility, design factor, proof load and temperature requirements. Importantly, these links meet other critical performance requirements including fatigue life, impact properties and material traceability, not addressed by ASME B30.26.

Grade 100 A-1343 Welded Master Link

Stock No.	Weight Each (kg)	Grade 100 Chain Sling		Grade 80 Chain Sling		WLL (t)	Proof Load (t)	Dimensions (mm)				Engineered Flat Size for S-1325A (mm)
		Single Leg Chain Size (mm)	Double Leg Chain Size (mm)	Single Leg Chain Size (mm)	Double Leg Chain Size (mm)			A	B	C	G	
1247051	0.4	6, 7	6, 7	6, 7, 8	6, 7, 8	3.2	8.0	13	60	120	6.5	6, 7, 8
1247087	0.84	8, 10	8	8, 10	8	4.1	10.2	17	90	160	8.5	10
1247096	1.1	10, 13	10	10, 13	10	6.7	16.7	19	90	160	8.5	10, 13
1247122	2.3	10, 13	10	10, 13	10	7.0	17.5	22	145	275	10.5	13
1247120	1.6	13	10	13, 16	13	8.8	22.0	22	100	180	10.5	13
1247126	3	13	-	13, 16	13	8.9	22.2	25	145	275	13.5	16
1247124	2.4	13, 16	13	16	16	11.5	28.7	25	115	210	13.5	16
1247133	3.9	13, 16	13	16	16	13.0	32.5	28	145	275	13.5	16
1247142	4.8	16	16	19, 20	19, 20	17.0	42.5	32	145	275	16.7	-
1247151	6.9	20	20	20, 22	20, 22	24.0	60.0	36	155	285	-	-
1247163	7.3	22, 23	22, 23	23, 26	23, 26	31.5	78.7	40	140	270	-	-
1247164	12.9	26	26	26	26	38.3	95.7	45	180	340	-	-
1247166	19.1	26	26	32	32	45.0	112.5	51	215	390	-	-
1247175	25.1	32	32	32	32	67.0	167.5	55	203	406	-	-

5:1 Design Factor. Applications with wire rope and synthetic sling generally require a Design Factor of 5. Based on single leg sling (in-line load), or resultant load on multiple legs with an included angle less than or equal to 120 degrees. Proof Test Load equals or exceeds the requirement of ASTM A952(8.1) and ASME B30.9. Chain slings require that the Design Factor be 4:1. Refer to Applications & Warnings to determine product's actual Ultimate Load. There are no manufactured flats on links over 1 1/4" (32mm).

Fatigue Rated Crosby 8/10™ CE Q&T

APPLICATION AND WARNING INFORMATION
SECTION 17

Copyright © 2023 The Crosby Group LLC All Rights Reserved

A-1346

- Alloy steel — Quenched & Tempered.
- Individually Proof Tested to values shown, with certification.
- Design Factor of 5 to 1.
- Proof Tested with 70% inside width special fixtures sized to prevent localized point loading per EN 1677-4, reference Applications & Warnings.
- Each main link is marked with Product Identification Code (PIC) for material traceability, Grade, CE, chain size and the "CG" (Crosby Group). Each sublink is marked with traceability code.
- A-1346 master links are type approved to DNV Certification. Notes 2.7-1-Offshore Containers. These Crosby master links are 100% proof tested. Every batch is impacted tested. The tests are conducted by Crosby and 3.1 test certification is available upon request.
- Engineered Flat for use with S-1325A coupler link.
- Fatigue rated to 20,000 cycles at 1-1/2 times the Working Load Limit.
- Meets or exceeds all requirements of ASME B30.26 including identification, ductility, design factor, proof load and temperature requirements. Importantly, these links meet other critical performance requirements including fatigue life, impact properties and material traceability, not addressed by ASME B30.26.

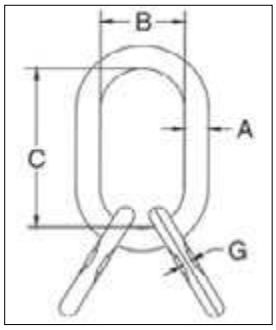

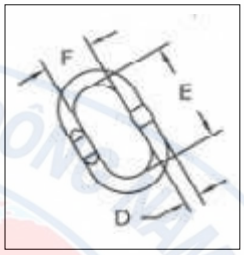

Grade 100 A-1346 Welded Master Link Assembly

Stock No.	Weight Each (kg)	Grade 100 Chain Sling Three / Four Legs Chain Size (mm)	Grade 80 Chain Sling Three / Four Legs Chain Size (mm)	WLL (t)	Proof Load (t)	Dimensions (mm) A	B	C	D	E	F	G	Engineered Flat Size for S-1325A Chain Size (mm)
1256865	1.1	6	6	3.2	8.0	13	60	120	13	120	60	6.5	6
1256868	1.6	6	6, 7	4.1	10.2	17	90	160	13	120	60	6.5	6, 7
1256874	1.8	6, 7	7	4.2	10.6	19	90	160	13	120	60	6.5	7, 8
1256878	3.3	8	10	7.0	17.5	22	100	180	17	160	90	8.5	10
1256880	4.1	8	10	7.0	17.5	22	145	275	17	160	90	8.5	10
1256876	3.8	10	10	8.5	21.2	22	100	180	19	160	90	8.5	10
1256882	4.6	10	10	8.9	22.2	25	115	210	19	160	90	8.5	10
1256892	5.2	10	10	8.9	22.2	25	145	275	19	160	90	8.5	10
1256917	7.1	13	13	14.5	36.2	28	145	275	22	180	100	10.5	13
1256926	9.6	13	16	17.0	42.5	32	145	275	25	210	115	13.5	16
1256929	12.7	16	16	23.6	59.0	36	155	285	28	190	110	13.5	16
1256930	18.4	16	19, 20	28.1	70.3	40	140	270	32	275	145	16.7	-
1256953	26.6	19, 20	22	38.3	95.7	45	180	340	36	285	155	-	-
1256958	35.5	22, 23	26	45.0	112.5	51	215	390	40	270	140	-	-
1256973	61.1	26	32	67.0	167.5	55	203	406	51	390	215	-	-

5:1 Design Factor. Applications with wire rope and synthetic sling generally require a Design Factor of 5. Based on single leg sling (in-line load), or resultant load on multiple legs with an included angle less than or equal to 120 degrees. Proof Test Load equals or exceeds the requirement of ASTM A952(8.1) and ASME B30.9. Chain slings require that the Design Factor be 4:1. Refer to applications & warnings to determine product's actual Ultimate Load. There are no manufactured flats on links over 1 1/4" (32mm).

Fatigue Rated Crosby 8/10 CE Q&T

APPLICATION AND WARNING INFORMATION SECTION 17

Copyright © 2023 The Crosby Group LLC All Rights Reserved

Crosby

A-342

Ratings below are for use with chain slings fabricated in accordance with ASME B30.9. For other applications, see Applications & Warnings.

- Alloy steel — Quenched & Tempered.
- Individually Proof Tested to values shown, with certification.
- Proof Tested with special fixtures sized to prevent localized point loading.
- Forgings have a Product Identification Code (PIC) for material traceability, along with the size, the name Crosby and USA in raised lettering.
- Selected sizes designated with "W" in the size column have enlarged inside dimensions to allow additional room for sling hardware and crane hook.
- Crosby 7/8" to 2" A-342 master links are type approved to DNV-ST-E271-2.7-1 Offshore Containers. These Crosby master links are 100% proof tested, MPI and impact tested. The tests are conducted by Crosby and 3.1 test certification is available upon request. Refer to the Crosby COLD TUFF® master links that meet the additional requirements of DNV rules for certification of lifting appliances - Loose Gear.
- Incorporates patented QUIC-CHECK® deformation indicators.
- Fatigue rated to 20,000 cycles at 1-1/2 times the Working Load Limit.
- Meets or exceeds all requirements of ASME B30.26 including identification, ductility, design factor, proof load and temperature requirements. Importantly, these links meet other critical performance requirements including fatigue life, impact properties and material traceability, not addressed by ASME B30.26.

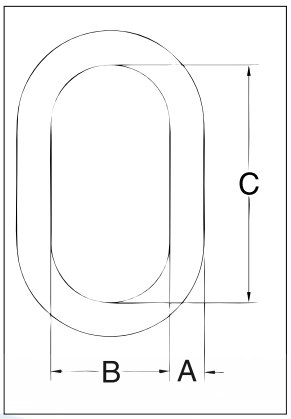

A-342 Alloy Master Links

Size							Grade 100 Chain Sling		Grade 80 Chain Sling		Dimensions (mm)			
(in)	(mm)	OC	Stock No.	Weight Each (kg)	Working Load Limit (t	Proof Load (kN)	Single Leg Chain Size (mm)	Double Leg Chain Size (mm)	Single Leg Chain Size (mm)	Double Leg Chain Size (mm)	A	B	C	Deformation Indicator
1/2W	13W	No	1014266	0.59	3.40	77	6, 7, 8	6mm	6mm, 9/32, 5/16, 3/8	6mm, 9/32	13	71.1	127	89
5/8	16	No	1014280	0.69	4.00	80	8, 10	9/32	3/8	5/16	16	76.2	152	89
3/4W	19W	No	1014285	0.91	5.60	126	8, 10	5/16	1/2	3/8	19	81.3	152	102
7/8W	22W	Yes	3522213	1.50	6.90	†169	10, 13	3/8	1/2	3/8	22	95.3	162	114
1W	26W	Yes	3522214	2.77	11.8	†289	13, 16	1/2	5/8	1/2	26	109	191	140
1-1/4W	32W	Yes	3522215	5.44	17.7	†435	16, 20	5/8	3/4, 7/8	5/8	32	140	241	178
1-1/2W	38W	Yes	3522216	8.44	27.7	†680	22, 26	3/4	1	3/4, 7/8	38	150	267	191
1-3/4	44	Yes	3522217	11.4	38.5	†944	26	7/8	1-1/4	1	44	152	305	191
2	51	Yes	3522218	16.8	46.5	†1141	32	7/8	1-1/4	1	51	178	356	229
2-1/4	57	No	1014422	24.5	64.9	1287	32	1	1-1/4	1-1/4	57	203	406	254
2-1/2	63	No	1014468	31.1	72.6	1423	1-1/4	1-1/4	-	-	63	213	406	279
2-3/4	70	No	1014440	42.6	98.4	1930	-	-	-	-	70	251	457	318
3	76	No	1014486	52.0	103	2029	-	-	-	-	76	251	457	330
3-1/4	83	No	1014501	66.0	119	2332	-	-	-	-	83	254	508	343
3-1/2	89	No	1014529	91.0	126	2483	-	-	-	-	89	305	610	394
3-3/4	95	No	1015051	90.0	152	2990	-	-	-	-	95	254	508	343
4	102	No	1015060	120	169	3319	-	-	-	-	102	305	610	406
†† 4-1/4	†† 108	No	1015067	137	160	3150	-	-	-	-	108	305	610	-
†† 4-1/2	†† 114	No	1015079	156	163	3202	-	-	-	-	114	356	711	-
†† 4-3/4	†† 121	No	1015088	198	176	778,000	-	-	-	-	121	356	711	-
†† 5	†† 127	No	1015094	234	179	790,000	-	-	-	-	127	381	762	-

5:1 Design Factor. Based on single leg sling (in-line load), or resultant load on multiple legs with an included angle less than or equal to 120 degrees. Applications with wire rope and synthetic sling generally require a design factor of 5. Proof Test Load equals or exceeds the requirement of ASTM A952(8.1) and ASME B30.9. †Offshore Container Master Links Proof Tested to 2.5 times the Working Load Limit with 70 percent fixtures. ††Welded Master Link. Chain slings require that the Minimum Ultimate Load be 4 times the Working Load Limit. Refer to applications & warnings to determine products actual Ultimate Load. Proof Test Load equals or exceeds the requirement of ASTM A952(8.1) and ASME B30.9-1.4 for the chain size and number of legs.

Fatigue Rated® Crosby 8/10™ QUIC-CHECK®

APPLICATION AND WARNING INFORMATION SECTION 17

Copyright © 2023 The Crosby Group LLC All Rights Reserved

A-345

- Alloy steel — Quenched & Tempered.
- Individually Proof Tested to values shown, with certification.
- Design Factor of 5 to 1
- Proof Tested with 60% inside width special fixtures sized to prevent localized point loading per ASME A-952.
- Each main link is marked with Product Identification Code (PIC) for material traceability, Grade, CE, chain size and the "CG" (Crosby Group). Each sublink is marked with traceability code.
- 22mm - 51mm A-345 master links are type approved to DNV Certification Notes 2.7-1- Offshore Containers. These Crosby master links are 100% proof tested, MPI and impact tested. The tests are conducted by Crosby and 3.1 test certification is available upon request.
- Engineered Flat for use with S-1325A coupler link.
- Fatigue rated to 20,000 cycles at 1-1/2 times the Working Load Limit.
- Meets or exceeds all requirements of ASME B30.26 including identification, ductility, design factor, proof load and temperature requirements. Importantly, these links meet other critical performance requirements including fatigue life, impact properties and material traceability, not addressed by ASME B30.26.

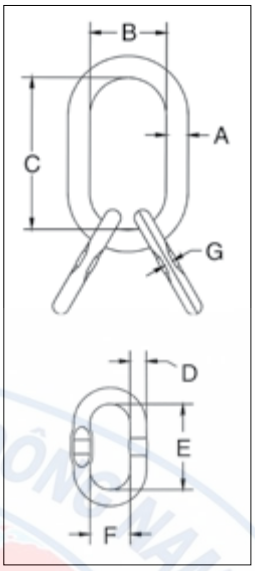

A-345 Master Link Assembly with Engineered Flat

Size (in)	Size (mm)	OC	Stock No.	Weight Each (kg)	Working Load Limit (t)	For Grade 100 Chain Size (mm)	For Grade 80 Chain Size (mm)	Proof Load (kN)	Dimensions (mm) A	B	C	D	E	F	G	Deformation Indicator	Engineered Flat for S-1325
3/4W	19W	No	3685119	1.8	5.6	6, 7, 8	6, 7, 8	†137.3	19	82	152	13	120	60	6.2	102	6 - 8
7/8W	22W	Yes	3014742	3.2	6.9	8	10	†171.7	22	95	162	17	170	80	8.5	114	6 - 8
1W	26W	Yes	3014766	5.8	11.8	10	13	†289.4	28	109	191	22	160	95	10.6	140	10
1-1/4W	32W	Yes	3014779	12.1	17.7	13	16	†434.1	34	140	241	28	240	130	-	178	-
1-1/2W	38W	Yes	3014807	18.3	27.7	16	19	†679.3	41	150	267	32	270	130	-	191	-
1-3/4W	44	Yes	3014814	23.5	38.5	20	22	†944.2	44	152	305	36	270	125	-	191	-
2	51	Yes	3014832	33.5	46.5	22	26	†1140.4	51	178	356	40	270	140	-	229	-
2-1/2	64	No	3014855	62.2	72.6	26	32	†1780.5	64	213	406	50	308	190	-	279	-
2-3/4	70	No	3014864	84.5	98.4	32	32	†2413.3	70	251	457	55	355	200	-	318	-
3-1/4	83	No	1014986	116	106.5	32	-	2611.9	83	254	508	63	286	203	-	343	-
4	102	No	1014999	303	169	-	-	4144.7	102	306	610	89	610	305	-	394	-

5:1 Design Factor. The maximum individual sublink working load limit is 75% of the assembly working load limit. Sublink for 3.25" and 4" is 61% of the assembly working load limit. Applications with wire rope and synthetic sling generally require a design factor of 5. Proof Test Load equals or exceeds the requirement of ASTM A952(8.1) and ASME B30.9. Chain slings require that the Minimum Ultimate Load be 4 times the Working Load Limit. Refer to applications & warnings to determine products actual Ultimate Load. Proof Test Load equals or exceeds the requirement of ASTM A952(8.1) and ASME B30.9-1.4 for the chain size and number of legs. †Proof Tested to 2.5 times the Working Load Limit with 70 percent fixtures.

Fatigue Rated Crosby 8/10™ QUIC-CHECK® Q&T

APPLICATION AND WARNING INFORMATION
SECTION 17

Copyright © 2023 The Crosby Group LLC All Rights Reserved

Crosby

A-344

- Alloy steel — Quenched & Tempered.
- Individually Proof Tested to values shown, with certification.
- Design Factor of 5 to 1.
- Proof Tested with 70% inside width special fixtures sized to prevent localized point loading per EN1677.
- Each main link is marked with Product Identification Code (PIC) for material traceability, Grade, CE, chain size and the "CG" (Crosby Group).
- A-344 master links are type approved to DNV Certification Notes 2.7-1- Offshore Containers. These Crosby master links are 100% proof tested. Every batch is impact tested. The tests are conducted by Crosby and 3.1 test certification is available upon request.
- Engineered Flat for use with S-1325A coupler link.
- Fatigue rated to 20,000 cycles at 1.5 times the Working Load Limit.
- Meets or exceeds all requirements of ASME B30.26 including identification, ductility, design factor, proof load and temperature requirements. Importantly, these links meet other critical performance requirements including fatigue life, impact properties and material traceability, not addressed by ASME B30.26.
- 13mm through 32mm have Engineered Flat.

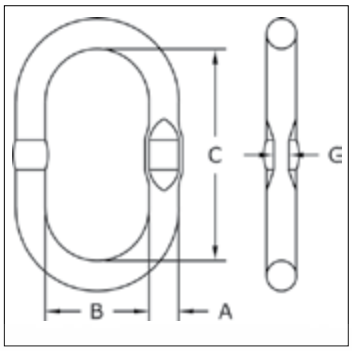

11mm through 31mm have Engineered Flat.

Grade 80 A-344 Welded Master Links available with Engineered Flat

Stock No.	Weight Each (kg)	Grade 100 Chain Sling: Single Leg Chain Size (mm)	Grade 100 Chain Sling: Double Leg Chain Size (mm)	Grade 80 Chain Sling: Single Leg Chain Size (mm)	Grade 80 Chain Sling: Double Leg Chain Size (mm)	WLL (t)	Proof Load (t)	Dimensions (mm): A	B	C	G	Engineered Flat Size for S-1325A (mm)
1256988	0.36	6, 7	6, 7	6, 7, 8	6, 7, 8	3.2	8.0	13	60	120	6.5	6, 7, 8
1257002	0.84	8, 10	8	8, 10	8	4.1	10.2	17	90	160	8.5	10
1257072	1.06	10, 13	10	10, 13	10	6.7	16.7	19	90	160	8.5	10, 13
1257268	2.34	10, 13	10	10, 13	10	7.0	17.5	22	145	275	10.5	13
1257212	1.63	13	10	13, 16	13	8.8	22.0	22	100	180	10.5	13
1257332	3.04	13		13, 16	13	8.9	22.2	25	145	275	13.5	16
1257282	2.41	13, 16	13	16	16	11.5	28.7	25	115	210	13.5	16
1257382	3.86	13, 16	13	16	16	13.0	32.5	28	145	275	13.5	16
1257422	4.82	16	16	19, 20	19, 20	17.0	42.5	32	145	275	16.7	-
1257492	6.88	20	20	20, 22	20, 22	24.0	60.0	36	155	285	-	-
1257502	7.31	22, 23	22, 23	23, 26	23, 26	31.5	78.7	40	140	270	-	-
1257562	12.89	26	26	26	26	38.3	95.7	45	180	340	-	-
1257632	19.12	26	26	32	32	45.0	112.5	51	215	390	-	-
1257573	25.10	32	32	32	32	67.0	167.5	55	203	406	-	-
1257591	42.80	-	-	-	-	90	225	70	250	450	-	-
1257600	57.00	-	-	-	-	125	312.5	80	260	450	-	-

5:1 Design Factor. Applications with wire rope and synthetic sling generally require a Design Factor of 5. Based on single leg sling (in-line load), or resultant load on multiple legs with an included angle less than or equal to 120 degrees. Proof Test Load equals or exceeds the requirement of ASTM A952(8.1) and ASME B30.9. Chain slings require that the Design Factor be 4:1. Refer to applications & warnings to determine product's actual Ultimate Load. There are no manufactured flats on links over 1 1/4" (32mm). Two largest sizes are available globally.

Fatigue Rated Q&T

APPLICATION AND WARNING INFORMATION
SECTION 17

Copyright © 2023 The Crosby Group LLC All Rights Reserved

A-347

- Alloy steel — Quenched & Tempered.
- Individually Proof Tested to values shown, with certification.
- Design Factor of 5 to 1.
- Proof Tested with 70% inside width special fixtures sized to prevent localized point loading per EN1677.
- Each main link is marked with Product Identification Code (PIC) for material traceability, Grade, CE, chain size and the "CG" (Crosby Group). Each sublink is marked with traceability code.
- A-347 master links are type approved to DNV Certification Notes 2.7-1- Offshore Containers. These Crosby master links are 100% proof tested. Every batch is impact tested. The tests are conducted by Crosby and 3.1 test certification is available upon request.
- Engineered Flat for use with S-1325A coupler link.
- Fatigue rated to 20,000 cycles at 1.5 times the Working Load Limit.
- Meets or exceeds all requirements of ASME B30.26 including identification, ductility, design factor, proof load and temperature requirements. Importantly, these links meet other critical performance requirements including fatigue life, impact properties and material traceability, not addressed by ASME B30.26.
- Available only in EMEA.

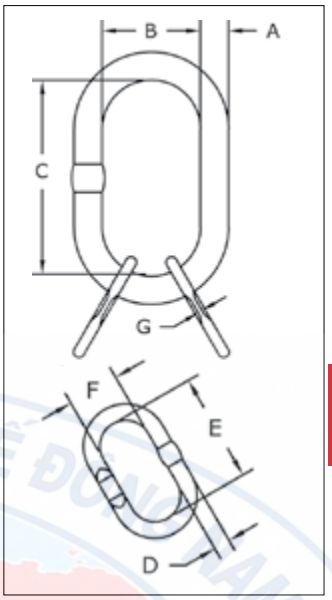

Grade 80 A-347 Welded Master Link Assembly with Engineered Flat

Stock No.	Weight Each (kg)	Grade 100 Chain Sling Three / Four Legs Chain Size (mm)	Grade 80 Chain Sling Three / Four Legs Chain Size (mm)	WLL (t)	Proof Load (t)	Dimensions (mm)							Engineered Flat Size for S1325A Chain Size (mm)
						A	B	C	D	E	F	G	
1257755	1.1	6	6	3.2	8.0	13	60	120	13	120	60	6.5	6
1257762	1.6	6	6, 7	4.1	10.3	17	90	160	13	120	60	6.5	6, 7
1257832	1.8	6, 7	7	4.2	10.6	19	90	160	13	120	60	6.5	7, 8
1258058	3.3	8	10	7.0	17.5	22	100	180	17	160	90	8.5	10
1258067	4.1	8	10	7.0	17.5	22	145	275	17	160	90	8.5	10
1258049	3.8	10	10	8.5	21.2	22	100	180	19	160	90	8.5	10
1258076	4.6	10	10	8.9	22.2	25	115	210	19	160	90	8.5	10
1258102	5.3	10	10	8.9	22.2	25	145	275	19	160	90	8.5	10
1258142	7.2	13	13	14.5	36.2	28	145	275	22	180	100	10.5	13
1258182	9.9	13	16	17.0	42.5	32	145	275	25	210	115	13.5	16
1258185	12.7	16	16	23.6	59.0	36	155	285	28	190	110	13.5	16
1258187	18.4	16	19, 20	28.1	70.2	40	140	270	32	275	145	16.7	-
1258402	26.7	19, 20	22	38.3	95.7	45	180	340	36	285	155	-	-
1258471	35.5	22, 23	26	45.0	112.5	51	215	390	40	270	140	-	-
1258491	61.1	26	32	67.0	167.5	55	203	406	51	390	215	-	-

5:1 Design Factor. Applications with wire rope and synthetic sling generally require a Design Factor of 5. Based on single leg sling (in-line load), or resultant load on multiple legs with an included angle less than or equal to 120 degrees. Proof Test Load equals or exceeds the requirement of ASTM A952(8.1) and ASME B30.9. Chain slings require that the Design Factor be 4:1. Refer to applications & warnings to determine product's actual Ultimate Load. There are no manufactured flats on links over 1 1/4" (32mm).

Fatigue Rated Q&T

APPLICATION AND WARNING INFORMATION
SECTION 17

Copyright © 2023 The Crosby Group LLC All Rights Reserved

Crosby

G-340 / S-340

- Forged carbon steel - Quenched & Tempered
- Self colored (S) or hot-dip galvanized (G).

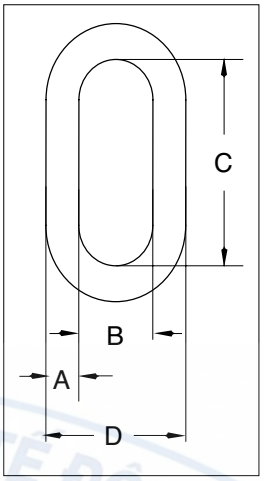

G-340/S-340 Weldless End Links

Size (A) (mm)	Stock No. G-340 Galv.	Stock No. S-340 S.C.	Working Load Limit (t)	Weight Each (kg)	Dimensions (mm) A	B	C	D
8	1014057	1014066	1.13	.07	8	12.7	44.5	30.0
10	1014075	1014084	1.72	.10	10	14.2	47.8	35.1
13	1014093	1014100	2.95	.22	13	19.1	60.5	46.0
16	1014119	1014128	4.22	.44	16	25.4	82.5	59.0
19	1014137	1014146	6.35	.68	19	28.7	89.0	68.0
22	1014155	1014164	5.44	1.17	22	51.0	130	95.5
25	1014173	1014182	6.89	1.79	25	57.0	146	108
32	1014191	1014208	11.97	3.31	32	63.5	178	127
35	1014217	1014226	13.61	4.71	35	70.0	197	140

5:1 Design Factor. Based on single leg sling (in-line load), or resultant load on multiple legs with an included angle less than or equal to 120°.

S-643

- Forged carbon steel - Quenched & Tempered.

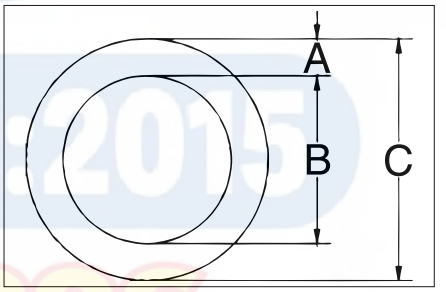

S-643 Weldless Rings

Size (mm)	Stock No	Working Load Limit Single Pull (t)	Weight Each (kg)	Dimensions (mm) A	B	C
22.2 x 102	1013780	3.27	1.23	22.2	102	146
22.2 x 140	1013806	2.54	1.57	22.2	140	184
25.4 x 102	1013824	4.90	1.67	25.4	102	152
28.6 x 152	1013842	4.72	2.99	28.6	152	210
31.8 x 127	1013860	7.71	3.09	31.8	127	191
34.9 x 152	1013888	8.62	4.59	34.9	152	222

6:1 Design Factor.

Copyright © 2023 The Crosby Group LLC All Rights Reserved

A-341

- Alloy steel — Quenched & Tempered.
- Individually Proof Tested at 2 times Working Load Limit with certification.
- Sizes up to 51mm are forged.

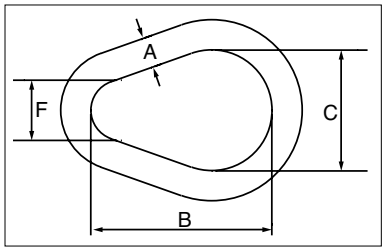

A-341 Alloy Pear Shaped Links

Size (A) (mm)	Stock No	Working Load Limit (t)	Working Load Limit (lb)	Weight Each (kg)	Dimensions (mm) B	Dimensions (mm) C	Dimensions (mm) F
13	1013575	3.15	7000	.25	76.2	50.8	25.4
16	1013584	4.09	9000	.50	95.3	63.5	31.8
19	1013595	5.59	12300	.80	114	76.2	38.1
22	1013604	6.81	15000	1.28	133	88.9	44.5
25	1013613	11.0	24360	1.91	152	102	51.0
28	1013622	13.9	30600	2.83	171	114	57.0
32	1013631	16.4	36000	3.74	191	127	63.5
35	1013640	19.5	43000	5.10	210	140	70.0
38	1013654	24.7	54300	6.46	229	152	76.0
44	1013672	38.6	84900	10.2	267	178	89.0
51	1013690	46.6	102600	15.4	305	203	102
†† 64	1013703	66.9	147300	29.9	381	254	127
†† 70	1013712	98.6	216900	39.9	419	279	140
†† 76	1013721	103	228000	52	457	305	152
†† 102	1013748	169	373000	123	610	406	203

5:1 Design Factor. Based on single leg sling (in-line load), or resultant load on multiple legs with an included angle less than or equal to 120°. †† Welded Link.

G-341 / S-341

- Forged carbon steel - Quenched & Tempered.
- Self colored (S) or hot-dip galvanized (G).

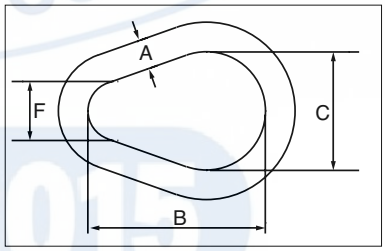

G-341 / S-341 Weldless Sling Links

Size (A) (mm)	Stock No. G-341 Galv.	Stock No. S-341 S.C.	Working Load Limit Single Pull (t)	Weight Each (kg)	Dimensions (mm) B	Dimensions (mm) C	Dimensions (mm) F
10	1013897	1013904	.82	0.10	57.2	38.1	19.1
13	1013913	1013922	1.32	.25	76.2	50.8	25.4
16	1013931	1013940	1.91	.48	95.5	63.5	31.8
19	1013959	1013968	2.72	.85	114	76.2	38.1
22	1013977	1013986	3.76	1.25	133	88.9	44.5
25	1013995	1014002	4.90	1.97	152	102	51.0
32	1014011	1014020	7.60	3.45	197	127	63.5
35	1014039	1014048	9.30	5.13	210	140	70.0

6:1 Design Factor. Based on single leg sling (in-line load), or resultant load on multiple legs with an included angle less than or equal to 120°.

Copyright © 2023 The Crosby Group LLC All Rights Reserved

GUNNEBO Industries

Identification of our Master Links

To provide good readability and traceability our master links have the following marking:

Product type

- M - represents single type master link.
- MT - represents master link assembly.
- OS - is an abbreviation for offshore. All Arctic offshore master links are marked with OS and complies with DNV 2.7-1.

Size designation

- The size is linked to the WLL as well as to compatible products, like attachment couplers and other components.
- Trade size.
- The size expressed in inch.

Approved by BG/DGUV

- H32 – represents Gunnebo Industries' manufacturing ID. The ID also represents a 3rd part audit by BG in Germany.

Traceability code

- The traceability code is unique for the production batch and normally consists of a letter and a number; for example A2. The traceability code makes it possible to trace and track the product through the whole production process back to the raw material used for the actual product.

Gunnebo Sweden

- To clearly highlight the Gunnebo Industries brand, our master links are marked with Gunnebo, Sweden.

Meets the standards

- The markings fulfills the requirements of EN 1677-4, ASTM A952, AS 3775.2 and DNV 2.7-1.

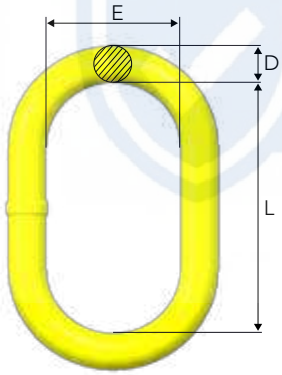

Master Link M

Stock No.	Code	WLL (t) 5:1		Dimensions (mm)			Weight (kg)
		EN 1677-4	A-952/A952M AS 3775.2-2014	L	E	D	
Z101271	M-6-10	1.5	1.5	100	60	11	0.2
Z100818	M-86-10	2.5	3.2	2.36	60	13	0.4
Z101273	M-108-10	4.0	5.2	140	80	17	0.8
Z101274	M-13-10	6.8	6.8	160	90	19	1.0
Z101267	M-1310-10	7.5	8.0	160	95	22	1.5
Z101268	M-1613-10	10.0	13.6	190	110	28	2.8
Z101247	M-19-10	12.0	16.0	200	120	30	3.5
Z101269	M-2016-10	17.0	20.6	240	140	34	5.2
Z101270	M-2220-10	25.0	30.9	250	150	40	7.3
Z101275	M-2622-10	28.0	32.0	250	150	42	8.7
Z101284	M-32-10	33.0	38.6	340	180	45	12.9
Z101276	M-3226-10	43.0	46.6	300	200	50	14.8
Z101277	M-3632-10	56.0	65.0	350	200	55	20.7
Z101278	M-4536-10	70.0	72.7	375	210	60	26.4
Z101279	M-90T-10	90.0	100.0	450	250	70	42.8
Z101280	M-125T-10*	125.0	125.0	450	260	80	57.0

* Dimension L and E not acc. to EN 1677-4.
Fulfills requirements in: EN 1677:2008 (WLL +25%), ASTM A952/A952M, AS 3775:2014.
5:1 Design Factor

Copyright © 2023 The Crosby Group LLC All Rights Reserved

Master Link MF with engineered flat

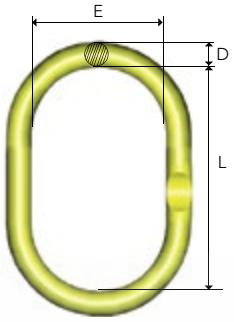

For 1-, 2-, 3- and 4-leg slings. Designed for use with CL, CLD, CG and CGD. 3- and 4 leg chain slings require CLD / CGD.

Stock No.	Code	WLL (t) 5:1		For chain size (mm)			Dimensions (mm)			Weight (kg)
		EN 1677-4	A-952/A952M AS 3775.2-2014	1-leg	2-leg	3-4 leg	L	E	D	
B14487	MF-6-10	1.5	1.5	6	-	-	100	60	11	0.2
B14489	MF-86-10	2.5	3.2	6, 8	6	-	120	60	13	0.4
B14482	MF-108-10	4.0	5.2	10	8	6	140	80	17	0.8
B14483	MF-1310-10	7.5	8.0	13	10	8	160	95	22	1.5
B14484	MF-1613-10	10.0	13.6	16	13	10	190	110	28	2.8
B14485	MF-2016-10	17.0	20.6	20	16	13	240	140	34	5.2
B14486	MF-2220-10	25.0	30.9	22	20	16	250	150	40	7.3

Fulfills requirements in: EN 1677:2008 (WLL +25%), ASTM A952/A952M, AS 3775:2014.
5:1 Design Factor

5

Master Link MFH with engineered flat

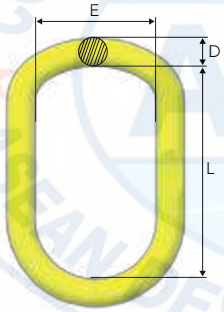

Designed for crane hooks, DIN 15401 and 15402. Designed for use with CL, CLD, CG and CGD.
3- and 4-leg chain slings require CLD / CGD.

Stock No.	Code	WLL (t) 5:1		For chain size (mm)			Dimensions (mm)			DIN15401	DIN15402	Weight (kg)
		EN 1677-4	A-952/A952M AS 3775.2-2014	1-leg	2-leg	3-4 leg	L	E	D			
Z101262	MFH-1310-10	7.5	8.0	13	10	8	230	125	22	≤ 12	≤ 16	2.1
Z101263	MFH-1613-10	10.0	13.6	16	13	10	250	135	28	≤ 12	≤ 16	3.7
Z101264	MFH-2016-10	17.0	20.6	20	16	13	280	135	32	≤ 16	≤ 20	5.3
Z101265	MFH-2220-10	28.0	30.9	26	20	16	320	175	40	≤ 25	≤ 32	9.7
Z101266	MFHW-2220-10	28.0	28.0	26	20	16	355	225	40	≤ 50	≤ 63	11.1

Fulfills requirements in: EN 1677:2008 (WLL +25%), ASTM A952/A952M, AS 3775:2014.
5:1 Design Factor

Master Link with Sublinks MT

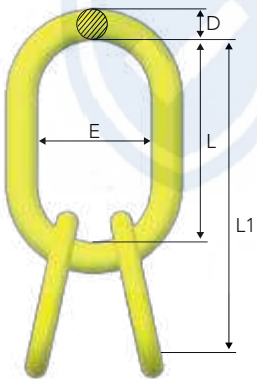

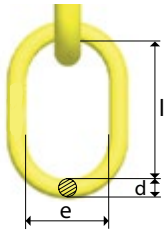

Designed for use with chain or wire rope. For 3- and 4-leg slings

Stock No.	Code	WLL (t) 5:1		Dimensions (mm)							Weight (kg)
		EN 1677-4	A-952/A952M AS 3775,2-2014	L1	L	E	D	l	e	d	
Z100091	MT-6-10	3.5	5.0	285	160	90	19	120	60	13	2.0
Z100903	MT-8-10	5.2	8.0	300	160	95	22	140	80	17	3.0
Z101359	MT-9-10	6.9	9.7	340	190	110	28	160	90	19	5.1
Z100904	MT-10-10	11.5	16.0	360	200	120	30	160	95	22	6.4
Z100905	MT-13-10	17.0	26.0	440	250	150	40	190	110	28	14.2
Z100906	MT-16-10	28.0	35.0	500	300	200	50	200	120	32	23
Z101074	MT-20-10	35.0	50.0	550	300	200	55	250	150	40	31.5
Z101281	MT-22-10	53.0	75.0	610	350	200	60	260	140	45	46
Z101282	MT-26-10	70.0	100.0	730	450	250	70	280	160	50	71
Z101283	MT-32-10	90.0	125.0	730	450	260	80	280	160	55	91

Fulfills requirements in: EN 1677:2008 (WLL +25%), ASTM A952/A952M, AS 3775:2014.

Engineered flat on the sublinks for sizes up to MT-16-10 except MT-9-10.

5:1 Design Factor

Copyright © 2023 The Crosby Group LLC All Rights Reserved

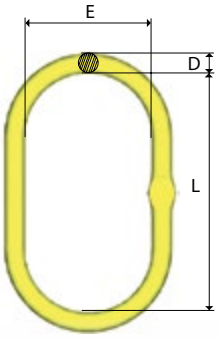

Master Link MFX with engineered flat

Oversized, for 1- and 2-leg slings. Designed for use with CL, CLD, CG and CGD.

Stock No.	Code	WLL (t) 5:1		For chain size (mm)		Dimensions (mm)			Weight (kg)
		EN 1677-4	A-952/A952M AS 3775.2-2014	1-leg	2-leg	L	E	D	
Z100550	MFX-108-10	4.25	5.2	8, 10	8	340	180	25	3.7
Z100551	MFX-1310-10	7.5	8.0	13	10	340	180	28	4.7
Z100552	MFX-1613-10	11.2	13.6	16	13	340	180	34	7.1
Z101125	MFX-2016-10	16.0	20.6	20	16	340	180	40	9.6

Fulfills requirements in: EN 1677:2008 (WLL +25%), ASTM A952/A952M-02, AS 3775:2014.
5:1 Design Factor

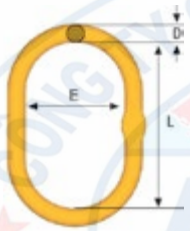

Master Link MF with engineered flat

Classic yellow paint.

Stock No.	Code	WLL (t)		Dimensions (mm)			Weight (kg)
		EN1677-4	A-952/A952M	L	E	D	
Z100817	MF-86-10	2.5	3.2	120	60	13	0.4
Z100861	MF-108-10	4.0	5.2	140	80	17	0.8
Z100862	MF-1310-10	7.5	8.0	160	95	22	1.5
Z100863	MF-1613-10	10.0	13.6	190	110	28	2.5
Z100864	MF-2016-10	17.0	20.6	240	140	34	5.2
Z100865	MF-2220-10	25.0	30.9	250	150	40	7.3

5:1 Design Factor. Fulfills requirements in: EN 1677:2008 (WLL +25%), ASTM A952/A952M.

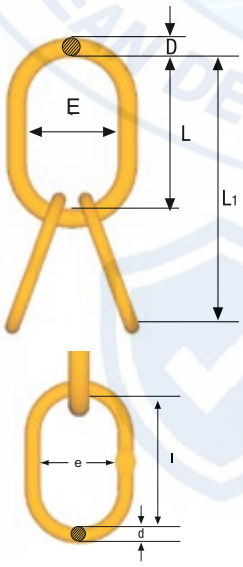

Master Link with Sub Links MT

Engineered flat on the sublinks. Classic yellow paint.

Stock No.	Code	WLL (t)		Dimensions (mm)							Weight (kg)
		EN1677-4	A-952/A952M	L1	L	E	D	l	e	d	
Z100819	MT-6-10	3.5	5.0	270	150	90	19	120	60	13	1.8
Z100889	MT-8-10	5.2	8.0	300	160	95	22	140	80	17	3.0
Z100890	MT-10-10	11.5	16.0	360	200	120	30	160	95	22	6.4
Z100891	MT-13-10	17.0	26.0	440	250	150	40	190	110	28	14.2
Z100892	MT-16-10	28.0	35.0	500	300	200	50	200	120	32	23

5:1 Design Factor. Fulfills requirements in: EN 1677:2008 (WLL +25%), ASTM A952/A952M.

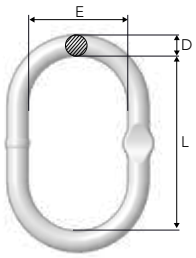

Master Link MF HDG with engineered flat

Stock No.	Code	WLL (t)		Z100902			Weight (kg)
		EN1677-4	A-952/A952M	L	E	D	
BG14489	MF-86-8 HDG	2.0	2.5	120	60	13	0.5
BG14482	MF-108-8 HDG	3.2	4.0	140	80	17	0.8
BG14483	MF-1310-8 HDG	5.4	6.8	160	95	22	1.5
BG14484	MF-1613-8 HDG	8.2	10.3	190	110	28	2.8

5:1 Design Factor.

Copyright © 2023 The Crosby Group LLC All Rights Reserved

CHAIN & ACCESSORIES

Innovative solutions for quicker, safer and easier lifting operations.

ASEAN JSC.VN
ASEAN DEVELOPMENT JOINT STOCK COMPANY
ISO 9001:2015
Since 2006

the Crosby group

thecrosbygroup.com

GUNNEBO Industries

GrabiQ: Components with multiple functions

Innovative designs that combine several clever functions in one component

Midgrab, MIG

Instant mounting, positioning, shortening on any part of the chain.

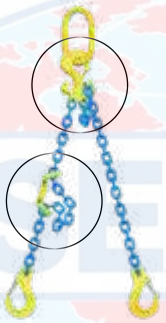

C-grab Duo, CGD

Built in shortening function.

Master Grab, MG

- All-in-one compact top link.
- Every chain leg can instantly be altered.
- Using the built in shortening function, you can alter between a straight lift to a looped sling in a matter of seconds.

Fewer components & lighter assembly

GrabiQ™ 4-leg sling with shortening function

(1) Master link
(2) C-grab Duos

Total: 3 components
with GrabiQ system

(1) Master link
(2) Sub links
(8) Berglok chain couplers
(4) Grab hooks

Total: 15 components
with traditional system

GrabiQ™ 2-leg sling with shortening function

(1) Master Grab Duo

Total: 1 component
with GrabiQ

(1) Master link
(4) Berglok chain couplers
(2) Grab hooks

Total: 7 components
with traditional system

Copyright © 2023 The Crosby Group LLC All Rights Reserved

Less is more with FlexiLeg

Thanks to the unique features of our GrabiQ product range, we offer solutions that increase the flexibility in lifting operations even further. Our FlexiLeg solution allows you to have an instant leg change on site.

With one single master link in combination with five Flexi-legs, we offer a solution that replaces four complete traditional slings, a total of ten legs. In addition, FlexiLeg also gives you the opportunity to modify the chain sling to different lifting operations, whenever and wherever it is needed.

The benefits of instant leg-change

- Enables the user to change slings, leg by leg.
- Makes the sling lighter and easier to work with.
- Sling legs that are not being used can easily be removed, thereby increasing safety at the work site.
- The quantity of sling material is greatly reduced, providing cost savings.
- The chain sling can be reconfigured on site, thus increasing efficiency.

GrabiQ FlexiLeg – a total of 5 legs replaces the total of 10 legs with the old traditional system.

Traditional System

Related Products

QuickPin – For safe exchange of sling legs

- Fits all C-components (CL, CLD, CG, CGD)
- Instant close/open function, no tools needed
- Easy to retrofit
- Made of stainless steel for long product life span

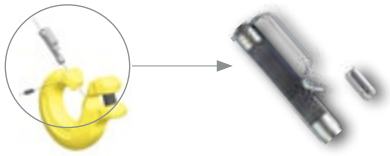

FlexiTag – For every GrabiQ sling

- Specially designed for FlexiLeg
- Fits all other GrabiQ slings
- WLL and chain size pre-stamped for 1 – 4 legs
- Leg angle 30/45 degree shown in contour
- Made of stainless steel for use in all weather conditions

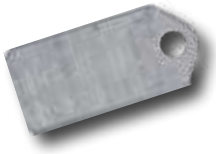

Copyright © 2023 The Crosby Group LLC All Rights Reserved

GrabiQ – solutions for every need

1-leg chain slings

MG1-GBK
Consist of: Master Link MG, Chain KLA, Safety Hook GBK

Chain Size (mm)	Chain Size (in)	WLL (t)	Total Components Length (mm)
6	-	1.5	171
8	5/16”	2.6	296
10	3/8”	4.0	361
13	1/2”	6.8	453
16	5/8”	10.3	527

4:1 Design Factor

MG1-EGKN
Type: Master Link MG, Chain KLA, Hook with Latch EGKN

Chain Size (mm)	Chain Size (in)	WLL (t)	Total Components Length (mm)
6	-	1.5	231
8	5/16”	2.6	261
10	3/8”	4.0	331
13	1/2”	6.8	408
16	5/8”	10.3	481

4:1 Design Factor

TG1-GBK
Master Link MF, C-grab CG, Chain KLA, Safety Hook GBK

Chain Size (mm)	Chain Size (in)	WLL (t)	Total Components Length (mm)
6	-	1.5	200
8	5/16”	2.6	346
10	3/8”	4.0	424
13	1/2”	6.8	504
16	5/8”	10.3	621

4:1 Design Factor

2-leg chain slings

TG1-EGKN
Consists of: Master Link MF, C-grab CG, Chain KLA, Hook with Latch EGKN

Chain Size (mm)	Chain Size (in)	WLL (t)	Total Components Length (mm)
6	-	1.5	286
8	5/16”	2.6	342
10	3/8”	4.0	415
13	1/2”	6.8	507
16	5/8”	10.3	624

4:1 Design Factor

MGD2-EGKN
Consists of: Master Link MGD, Chain KLA, Latch Hook EGKN

Chain Size (mm)	Chain Size (in)	WLL (t) β 0-45° α 0-90°	WLL (t) β 45°-60° α 90°-120°	Total Components Length (mm)
6	-	2.1	1.5	230
8	5/16”	3.5	2.6	261
10	3/8”	5.6	4.0	331
13	1/2”	9.5	6.8	408
16	5/8”	14.0	10.3	481

4:1 Design Factor

MGD2-GBK
Consists of: Master Link MGD, Chain KLA, Safety Hook GBK

Chain Size (mm)	Chain Size (in)	WLL (t) β 0-45° α 0-90°	WLL (t) β 45°-60° α 90°-120°	Total Components Length (mm)
6	-	2.1	1.5	235
8	5/16”	3.5	2.6	296
10	3/8”	5.6	4.0	361
13	1/2”	9.5	6.8	453
16	5/8”	14.0	10.3	527

4:1 Design Factor

TG2-GBK
Consists of: Master Link MF, C-grab Duo CGD, Chain KLA, Safety Hook GBK

Chain Size (mm)	Chain Size (in)	WLL (t) β 0-45° α 0-90°	WLL (t) β 45°-60° α 90°-120°	Total Components Length (mm)
6	-	2.1	1.5	291
8	5/16”	3.5	2.6	366
10	3/8”	5.6	4.0	444
13	1/2”	9.5	6.8	534
16	5/8”	14.0	10.3	671

4:1 Design Factor

TG2-EGKN
Consists of: Master Link MF, C-grab Duo CGD, Chain KLA, Latch Hook EGKN

Chain Size (mm)	Chain Size (in)	WLL (t) β 0-45° α 0-90°	WLL (t) β 45°-60° α 90°-120°	Total Components Length (mm)
6	-	2.1	1.5	286
8	5/16”	3.5	2.6	342
10	3/8”	5.6	4.0	415
13	1/2”	9.5	6.8	507
16	5/8”	14.0	10.3	625

4:1 Design Factor

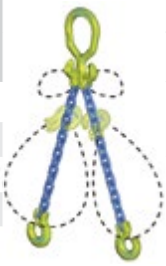

MGD2-CL
Consists of: Master Link MGD, Chain KLA, C-lok CL

Chain Size (mm)	Chain Size (in)	WLL (t) β 0-45° α 0-90°	WLL (t) β 45°-60° α 90°-120°	WLL choked (t) β 0-45° α 0-90°	WLL choked (t) β 45°-60° α 90°-120°	Total Components Length (mm)
6	-	2.1	1.5	1.6	1.2	187
8	5/16”	3.5	2.6	2.7	2.0	230
10	3/8”	5.6	4.0	4.4	3.2	285
13	1/2”	9.5	6.8	7.4	5.4	359
16	5/8”	14.0	10.3	11.0	8.0	429

4:1 Design Factor

Copyright © 2023 The Crosby Group LLC All Rights Reserved

3-leg chain sling

TG3-GBK
Consists of: Master Link MF, C-grab CG, C-grab Duo CGD, Chain KLA, Safety Hook GBK

Chain Size		WLL (t)		Total Components Length (mm)
(mm)	(in)	β 0-45° a 0-90°	β 45°-60° a 90°-120°	
6	-	3.1	2.2	311
8	5/16”	5.2	3.7	392
10	3/8”	8.4	6.0	474
13	1/2”	14.0	10.0	604
16	5/8”	21.0	15.0	680

4:1 Design Factor

TG3-EGKN
Consists of: Master link MF, C-grab CG, C-grab Duo CGD, Chain KLA, Latch Hook EGKN

Chain Size		WLL (t)		Total Components Length (mm)
(mm)	(in)	β 0-45° α 0-90°	β 45°-60° a 90°-120°	
6	-	3.1	2.2	306
8	5/16”	5.2	3.7	357
10	3/8”	8.4	6.0	444
13	1/2”	14.0	10.0	559
16	5/8”	21.0	15.0	634

4:1 Design Factor

4-leg chain sling

TG4-GBK
Consists of: Master Link MF, C-grab Duo CGD, Chain KLA, Safety Hook GBK

Chain Size		WLL (t)		Total Components Length (mm)
(mm)	(in)	β 0-45° α 0-90°	β 45°-60° α 90°-120°	
6	-	3.1	2.2	311
8	5/16”	5.2	3.7	392
10	3/8”	8.4	6.0	474
13	1/2”	14.0	10.0	604
16	5/8”	21.0	15.0	680

4:1 Design Factor

TG4-EGKN
Consists of: Master link MF, C-grab Duo CGD, Chain KLA, Latch Hook EGKN

Chain Size		WLL (t)		Total Components Length (mm)
(mm)	(in)	β 0-45° α 0-90°	β 45°-60° α 90°-120°	
6	-	3.1	2.2	306
8	5/16”	5.2	3.7	357
10	3/8”	8.4	6.0	444
13	1/2”	14.0	10.0	559
16	5/8”	21.0	15.0	634

4:1 Design Factor

Grade 10 chain slings

Working Load Limits in tonnes for chain slings grade 10

Based on EN 818-4:2008 WLL +25%

Sling type	1-leg	2-leg		3- and 4-leg		Choke Hitch	
Condition of use	**Straight**	**ß 0-45° α 0-90°**	**ß 45-60° α 90-120°**	**ß 0-45° α 0-90°**	**ß 45-60° α 90-120°**	**Choke ß 0-45° α 0-90°**	**Choke ß 45-60° α 90-120°**
Load factor	1	1.4	1	2.1	1.5	1.1	0.8
Chain size							
6	1.50	2.10	1.50	3.10	2.20	1.60	1.20
7	1.95	2.70	1.95	4.00	2.90	2.10	1.50
8	2.60	3.70	2.60	5.50	3.90	2.80	2.10
10	4.00	5.60	4.00	8.40	6.00	4.40	3.20
13	6.80	9.60	6.80	14.40	10.20	7.40	5.40
16	10.00	14.10	10.00	21.00	15.00	11.00	8.00
20	16.00	22.50	16.00	33.60	24.00	17.60	12.80
22	20.00	28.20	20.00	42.00	30.00	22.00	16.00
26	27.00	38.20	27.00	57.20	40.90	29.70	21.60
32	40.00	56.40	40.00	84.00	60.00	44.00	32.00

4:1 Design Factor. Working Load Limits are based on equally loaded and disposed sling legs.

APPLICATION AND WARNING INFORMATION
SECTION 17

Copyright © 2023 The Crosby Group LLC All Rights Reserved

GUNNEBO Industries

Chain Tensioner GT – for lifting

One of the main benefits of using chain slings instead of other types of slings is the ability to shorten the chain to balance the load in asymmetrical lifts.

Gunnebo Industries offers a wide range of fittings for shortening, but most of these options only shorten in increments of one chain link. Certain applications require more precision when shortening, and for those the GT chain tensioner, approved for lifting purposes, is an excellent choice.

The Chain Tensioner GT is integral in one set. It is made of high-strength Grade 10 material, and the ratchet handle contributes to fast and ergonomic shortening. Our chain tensioner is designed to be compatible with the GrabiQ product range, enabling a wide range of fittings to be used for any type of application.

Precise positioning

The GT tensioner offers stepless adjustment, allowing for precise positioning of the load.

Midgrab Shorterner MIG

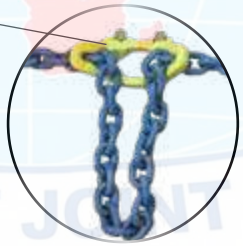

Precision shortening

The GT tensioner offers 200mm of precision shortening. For shortening of longer increments, our unique Midgrab Shortener MIG is the ideal choice.

Full capacity

As with all Gunnebo Industries' shorteners, there is no reduction in the capacity of the system when shortening.

100% proof loaded

Every unit is individually proof loaded to 2.5 x WLL.

Chain Tensioner GT

Stock No.	Model	WLL (t)*	L = Min. Length (mm)	L = Max. Length (mm)	Weight (kg)
Z101367	GT-8-10	2.6	400	600	3.3
Z101368	GT-10-10	4.0	400	600	3.3

4:1 Design Factor

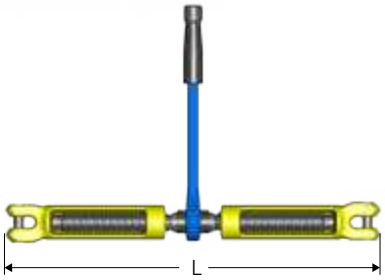

Copyright © 2023 The Crosby Group LLC All Rights Reserved

Midgrab Chain Shortener, MIG

- Instant mounting and positioning on any part of the chain.
- Shortening in either chain direction; up-down.
- Designed to prevent inadvertent chain disengagement.
- Can be set idle on the chain leg when shortening is not required.
- LC version offers secure mounting with locking set on any desired part of the chain with one chain direction open for shortening.
- CC version offers close-open function in both chain directions for safe retention of the chain.

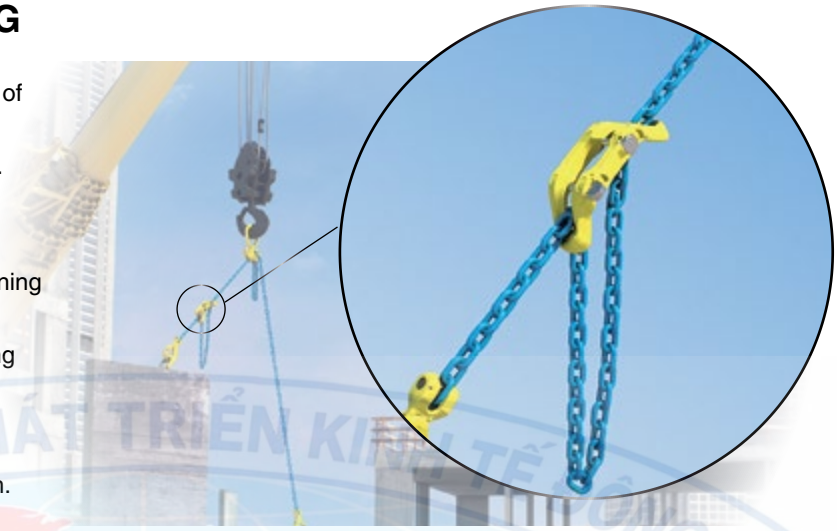

Locking devices for Midgrab MIG

Note: The MIG should be used with at least one locking devices.

L - fixed locking set

For fixed mounting

Code:
L-8: B14905
L-10: B14915
L-13: B14917

C - close/open locking set

Spring operated locking device. Can be placed either in open or closed position.

Code:
C-8: B14904
C-10: B14914
C-13: B14916

Product code guide – locking options

MIG C MIG CC MIG L MIG LC

MIG with C pins

For use with Grade 100 or Grade 80 chain.

Stock No.	Code	WLL (t)	Dimensions (mm)			Weight (kg)
			L	X	Y	
B14303	MIG CC-8-10	2.6	95	50	60	0.7
B14313	MIG CC-10-10	4.0	125	70	77	1.1
B14323	MIG CC-13-10	6.8	150	90	80	2.6

4:1 Design Factor

MIG without pins

For use with Grade 100 or Grade 80 chain.

Stock No.	Code	WLL (t)	Dimensions (mm)			Weight (kg)
			L	X	Y	
B14300	MIG-8-10	2.6	95	50	60	0.6
B14310	MIG-10-10	4.0	125	70	77	1.0
B14320	MIG-13-10	6.8	150	90	80	2.5

4:1 Design Factor

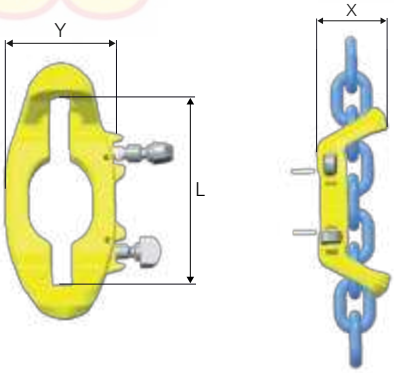

Copyright © 2023 The Crosby Group LLC All Rights Reserved

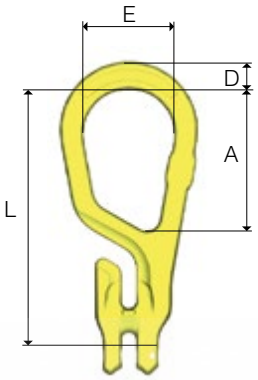

Master Grab MG

For use with Grade 100 or Grade 80 chain. "All-in-one" compact top link.

Stock No.	Code	WLL (t)	Dimensions (mm)				Weight (kg)
			L	A	E	D	
B14710	MG-6-10	1.5	145	88	60	15	0.5
B14711	MG-8-10	2.6	171	92	60	18	0.9
B14712	MG-10-10	4.0	211	113	75	22	1.8
B14713	MG-13-10	6.8	261	138	90	26	3.5
B14714	MG-16-10	10.3	311	157	105	31	6.1

4:1 Design Factor. Fulfills requirements in: EN 1677:2008 (WLL +25%), ASTM A952/A952M and AS 3776:2015.

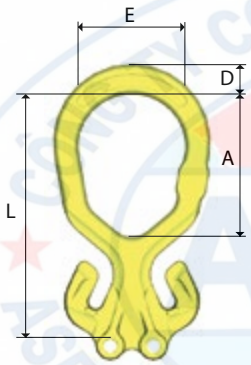

Master Grab Duo MGD

For use with Grade 100 or Grade 80 chain. "All-in-one" compact top link for 2-leg slings.

Stock No.	Code	WLL (t)	Dimensions (mm)				Weight (kg)
			L	A	E	D	
B14700	MGD-6-10	2.1	144	90	60	17	0.7
B14701	MGD-8-10	3.5	171	100	75	21	1.3
B14702	MGD-10-10	5.6	211	124	90	24	2.3
B14703	MGD-13-10	9.5	262	149	105	31	5.2
B14704	MGD-16-10	14.0	310	175	120	35	7.9

4:1 Design Factor. Fulfills requirements in: EN 1677:2008 (WLL +25%), ASTM A952/A952M and AS 3776:2015.

MASTER GRAB DUO

With the all-in-one compact top link Master Grab Duo (MGD), every chain leg can instantly be altered between a straight lift to a looped sling in a matter of seconds. The innovative design with few components and built-in shortening function makes the MGD the perfect foundation for a cost-efficient and safe chain sling solution.

Watch the Master Grab Duo video at thecrosbygroup.com/MGD

Copyright © 2023 The Crosby Group LLC All Rights Reserved

C-Grab CG

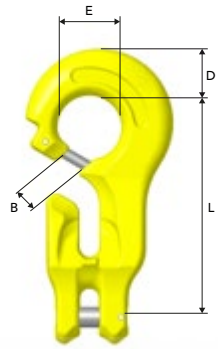

For use with Grade 100 or Grade 80 chain. For use with MF master and BK type hooks.

Stock No.	Code	WLL (t)	Dimensions (mm)				Weight (kg)
			L	B	E	D	
B14730	CG-6-10	1.5	80	11	24	19	0.3
B14731	CG-8-10	2.6	107	12	32	24	0.7
B14732	CG-10-10	4.0	134	15	40	29	1.5
B14733	CG-13-10	6.8	172	18	52	38	3.2
B14734	CG-16-10	10.3	215	22	64	47	6.1

4:1 Design Factor. Fulfills requirements in: EN 1677:2008 (WLL +25%), ASTM A952/A952M and AS 3776:2015.

C-Grab Duo CGD

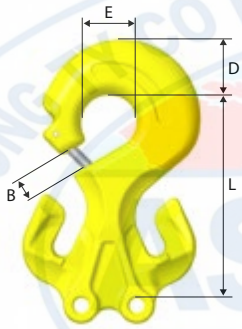

For use with Grade 100 or Grade 80 chain. For use with master links.

Stock No.	Code	WLL (t)	Dimensions (mm)				Weight (kg)
			L	B	E	D	
B14720	CGD-6-10	2.1	79	11	24	20	0.6
B14721	CGD-8-10	3.5	107	12	32	29	1.1
B14722	CGD-10-10	5.6	134	15	40	37	2.2
B14723	CGD-13-10	9.5	173	19	48	48	5.4
B14724	CGD-16-10	14.0	215	22	64	57	9.1

4:1 Design Factor. Fulfills requirements in: EN 1677:2008 (WLL +25%), ASTM A952/A952M and AS 3776:2015.

C-Lok CL

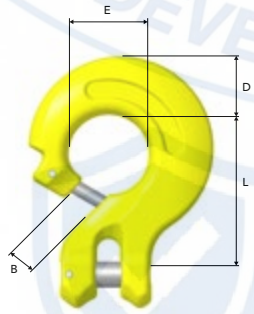

For use with Grade 100 or Grade 80 chain. For use with master links, eye hooks and choke.

Stock No.	Code	WLL (t)	Dimensions (mm)				Weight (kg)
			L	B	E	D	
B14750	CL-6-10	1.5	43	11	24	18	0.2
B14751	CL-8-10	2.6	58	12	32	24	0.5
B14752	CL-10-10	4.0	74	15	40	29	1.0
B14753	CL-13-10	6.8	94	18	52	38	2.0
B14754	CL-16-10	10.3	119	22	64	48	3.8

4:1 Design Factor. Fulfills requirements in: EN 1677:2008 (WLL +25%), ASTM A952/A952M and AS 3776:2015.

C-Lok Duo CLD

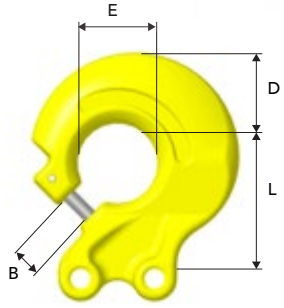

For use with Grade 100 or Grade 80 chain. For use with master links.

Stock No.	Code	WLL (t)	Dimensions (mm)				Weight (kg)
			L	B	E	D	
B14740	CLD-6-10	2.1	43	11	24	22	0.4
B14741	CLD-8-10	3.5	58	12	32	29	0.6
B14742	CLD-10-10	5.6	74	15	40	37	1.2
B14743	CLD-13-10	9.5	94	18	52	46	3.1
B14744	CLD-16-10	14.0	119	25	64	57	5.5

4:1 Design Factor. Fulfills requirements in: EN 1677:2008 (WLL +25%), ASTM A952/A952M and AS 3776:2015.

Copyright © 2023 The Crosby Group LLC All Rights Reserved

Coupling Link G

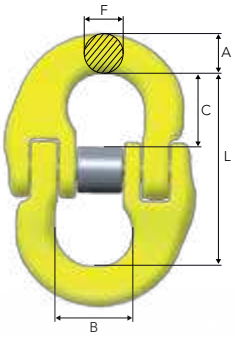

For use with Grade 100 or Grade 80 chain. For use with master link and eye hook.

Stock No.	Code	WLL (t)	Dimensions (mm)					Weight (kg)
			L	B	F	A	C	
Z100821	G-6-10	1.5	45	15	7	8	16	0.1
Z101358	G-7-10	2.0	56	18	9	11	22	0.2
Z100822	G-8-10	2.6	56	18	9	11	22	0.2
Z100823	G-10-10	4.0	68	25	12	13	26	0.3
Z100824	G-13-10	6.8	89	29	15	17	33	0.7
Z100825	G-16-10	10.3	106	36	19	20	40	1.4
Z101119	G-20-10	16.0	125	43	23	26	44	2.2
Z101339	G-22-10	20.0	152	50	26	28	59	3.6
Z101365	G-26-10	27.3	161	58	32	34	61	5.7
Z101666	G-32-10	40.0	200	70	38	40	77	9.5

4:1 Design Factor. Fulfills requirements in: EN 1677:2008 (WLL +25%), ASTM A952/A952M-02 and AS 3776:2015.

Grab Hook GG

Clevis shortening hook. For use with Grade 100 or Grade 80 chain. No reduction of working load limit, thanks to supporting cradle lugs on either side of hook to prevent chain link deformation.

Stock No.	Code	WLL (t)	Dimensions (mm)		Weight (kg)
			L	B	
Z101844	GG-6-10	1.5	54	8	0.2
Z100845	GG-7-10	2.0	57	10	0.3
B14771	GG-8-10	2.6	57	10	0.4
B14772	GG-10-10	4.0	76	12	0.9
B14773	GG-13-10	6.8	97	16	1.8
B14774	GG-16-10	10.3	114	20	3.1
Z101152	GG-20-10	16.0	147	26	7.0

4:1 Design Factor. Fulfills requirements in: EN 1677:2008 (WLL +25%), ASTM A952/A952M and AS 3776:2015.

Grab Hook GG with Locking Pin

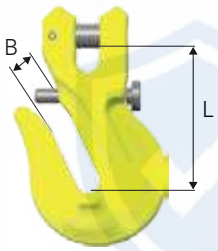

Clevis shortening hook with locking pin for extra safety. For use with Grade 100 or Grade 80 chain. No reduction of working load limit, thanks to supporting cradle lugs on either side of hook to prevent chain link deformation.

Stock No.	Code	WLL (t)	Dimensions (mm)		Weight (kg)
			L	B	
B14971	GG-8-10 LP	2.6	57	10	0.4
B14972	GG-10-10 LP	4.0	77	12	0.9
B14973	GG-13-10 LP	6.z z	97	16	1.9
B14974	GG-16-10 LP	10.3	114	20	3.2

4:1 Design Factor. Fulfills requirements in: EN 1677:2008 (WLL +25%), ASTM A952/A952M and AS 3776:2015.

Grab Hook OG

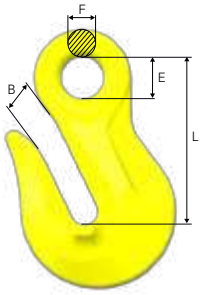

Eye shortening hook. For use with Grade 100 or Grade 80 chain. No reduction of working load limit, thanks to supporting lugs on either side of hook to prevent chain link deformation.

Stock No.	Code	WLL (t)	Dimensions (mm)				Weight (kg)
			L	B	E	F	
Z101296	OG-7/8-10	2.6	65	10	17	10	0.3
Z101297	OG-10-10	4.0	85	12	20	12	0.7
Z101298	OG-13-10	6.8	104	16	26	16	1.6
Z101299	OG-16-10	10.3	131	20	32	19	2.8
Z101300	OG-20-10	16.0	167	26	41	23	6.1
Z101301	OG-22-10	20.0	187	26	46	26	7.75
Z101302	OG-26-10	27.3	228	32	55	38	14
Z101303	OG-32-10	40.0	229	40	50	27	20.7

4:1 Design Factor. Fulfills requirements in: EN 1677:2008 (WLL +25%), ASTM A952/A952M and AS 3776:2015.

Copyright © 2023 The Crosby Group LLC All Rights Reserved

Sling Hook EGK

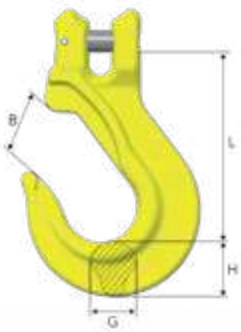

For use with Grade 100 or Grade 80 chain. Sling hook with clevis connector.

Stock No.	Code	WLL (t)	Dimensions (mm)				Weight (kg)
			L	B	G	H	
Z100915	EGK-6-10	1.5	86	29	17	20	0.4
Z100918	EGK-7-10	2.0	95	32	17	22	0.5
Z100938	EGK-8-10	2.6	95	32	17	23	0.5
Z100942	EGK-10-10	4.0	121	41	23	31	1.0
Z100946	EGK-13-10	6.8	145	49	28	38	2.0
Z100950	EGK-16-10	10.3	170	61	36	46	3.8
Z101138	EGK-20-10	16.0	209	71	42	60	7.3

4:1 Design Factor. Fulfills requirements in: EN 1677:2008 (WLL +25%), ASTM A952/A952M and AS 3776:2015.

Sling Hook EGKN

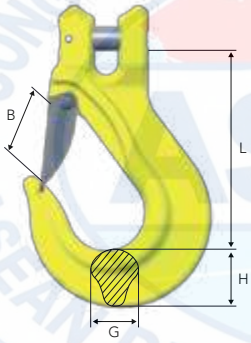

For use with Grade 100 or Grade 80 chain. Sling hook with latch.

Stock No.	Code	WLL (t)	Dimensions (mm)				Weight (kg)
			L	B	G	H	
B14460	EGKN-6-10	1.5	86	25	17	20	0.4
Z100843	EGKN-7-10	2.0	95	27	17	23	0.5
B14461	EGKN-8-10	2.6	95	28	17	23	0.5
B14462	EGKN-10-10	4.0	121	35	23	31	1.1
B14463	EGKN-13-10	6.8	145	42	28	38	2.2
B14464	EGKN-16-10	10.3	170	53	36	46	4.0
Z101127	EGKN-20-10	16.0	209	65	42	60	7.6

4:1 Design Factor. Fulfills requirements in: EN 1677:2008 (WLL +25%), ASTM A952/A952M and AS 3776:2015.

Coupling Link GF – stain proof

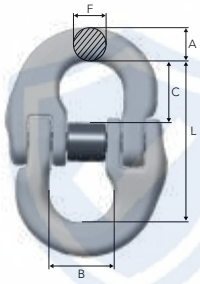

High strength stainless steel.

Stock No.	Code	WLL (t)	For chain dim. (mm)	Dimensions (mm)					Weight (kg)
				L	B	F	A	C	
B80202	GF-10-8 SP	3.2	10	68	25	11	13	26	0.3
B80203	GF-13-8 SP	5.4	13	89	30	15	16	33	0.7
B80204	GF-16-8 SP	8.2	16	105	36	19	20	40	1.2

4:1 Design Factor

Coupling Link G HDG

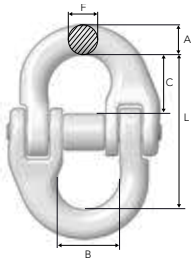

Hot-dip galvanized for marine environments.

Stock No.	Code	WLL (t)	Dimensions (mm)					Weight (kg)
			L	B	F	A	C	
ZG100821	G-6-8 HDG	1.12	45	15	7	8	17	0.1
ZG100822	G-8-8 HDG	2.0	56	18	9	11	22	0.2
ZG100823	G-10-8 HDG	3.2	68	25	11	13	26	0.3
ZG100824	G-13-8 HDG	5.4	89	30	15	16	33	0.7
ZG100825	G-16-8 HDG	8.2	102	36	19	20	40	1.2

4:1 Design Factor

Copyright © 2023 The Crosby Group LLC All Rights Reserved

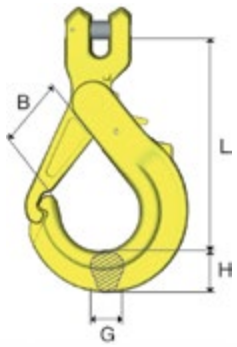

Safety Hook GBK

For use with Grade 100 or Grade 80 chain. Safety hook with clevis connector and grab latch.

Stock No.	Code	WLL (t)	Dimensions (mm)				Weight (kg)
			L	B	G	H	
Z100758	GBK-6-10	1.5	87	26	15	17	0.4
Z100849	GBK-7-10	2.0	114	36	20	22	0.5
Z100759	GBK-8-10	2.6	119	36	20	22	0.8
Z100760	GBK-10-10	4.0	150	47	22	29	1.4
Z100761	GBK-13-10	6.8	172	53	29	38	2.7
Z100762	GBK-16-10	10.3	208	68	30	45	4.4

4:1 Design Factor. Fulfills requirements in: EN 1677:2008 (WLL +25%), ASTM A952/A952M and AS 3776:2015.

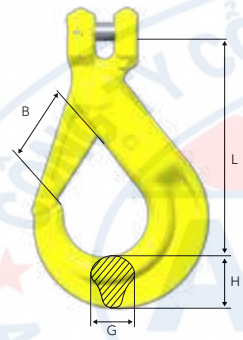

Safety Hook BKG

For use with Grade 100 or Grade 80 chain. Safety hook with clevis connector and standard latch.

Stock No.	Code	WLL (t)	Dimensions (mm)				Weight (kg)
			L	B	G	H	
Z101110	BKG-6-10	1.5	91	29	15	21	0.5
Z101098	BKG-7-10	2.0	120	37	17	22	0.5
Z101100	BKG-8-10	2.6	121	37	17	26	0.9
Z101026	BKG-10-10	4.0	144	45	21	31	1.5
Z101034	BKG-13-10	6.8	180	55	30	40	3.0
Z101042	BKG-16-10	10.3	219	62	37	50	5.5
Z101091	BKG-20-10	16.0	240	68	46	64	9.6

4:1 Design Factor. Fulfills requirements in: EN 1677:2008 (WLL +25%), ASTM A952/A952M and AS 3776:2015.

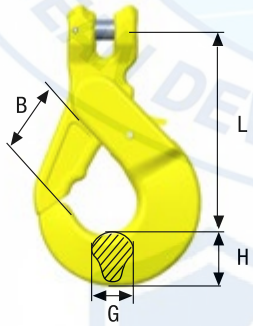

Safety Hook BKGC

For use with Grade 100 or Grade 80 chain. Safety hook with clevis connector for skip loaders.

Stock No.	Code	WLL (t)	Dimensions (mm)				Weight (kg)
			L	B	G	H	
Z1002401	BKGC-13-10	6.8	164	55	27	43	3.2

4:1 Design Factor. Fulfills requirements in: EN 1677:2008 (WLL +25%), ASTM A952/A952M and AS 3776:2015.

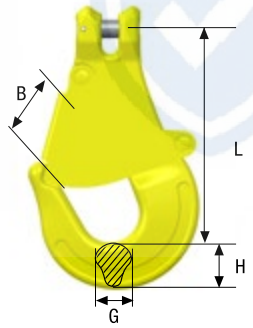

Sling Hook GKC

For use with Grade 100 or Grade 80 chain. Sling hook with clevis connector for skip loaders.

Stock No.	Code	WLL (t)	Dimensions (mm)				Weight (kg)
			L	B	G	H	
Z7006461	GKC-13-10	6.8	188	60	27	43	2.5

4:1 Design Factor. Fulfills requirements in: EN 1677:2008 (WLL +25%), ASTM A952/A952M and AS 3776:2015.

Clevis Egglink CEL

Stock No.	Code	WLL (t)	C	E	G	H	L	Weight (kg)
Z701968	CEL-8-10	2.6	80	40	14	15	100	0.4
Z701969	CEL-10-10	4.0	100	50	18	19	126	0.7
Z701970	CEL-13-10	6.8	130	65	23	25	162	1.5

4:1 Deisgn Factor. Fulfills requirements in: EN 1677:2008, ISO 8539:2009, ASTM A952/A952M and AS 3776:2015.

Copyright © 2023 The Crosby Group LLC All Rights Reserved

Egg Link KSS

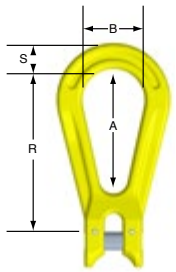

Stock No.	Model	Chain Diameter (mm)	WLL 8+10	Dimensions (mm)				Weight (kg)
				A	B	R	S	
Z2780422	KSS7N	7	2.0	70	35	92	13	.27
Z2780431	KSS10N	10	4.0	102	51	132	18.5	.74
Z2780440	KSS13N	13	6.7	137	67	177	26	1.92
Z2780459	KSS16N	16	10.0	172	83	220	31	3.17
Z2780468	KSS19N	19	14.0	203	98	261	37	5.58
Z2780477	KSS23N	23	21.0	238	114	305	40	8.42
Z2780486	KSS26N	26	27.0	273	133	351	46	14.51

Kupler K

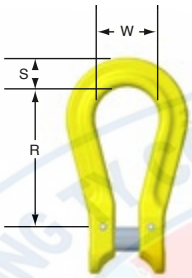

Stock No.	Model	Chain Diameter (mm)	WLL 8+10	Dimensions (mm)			Weight (kg)
				R	W	S	
Z2780495	K7N	7	2.0	60	26	12.5	.15
Z2780501	K10N	10	4.0	73	35	19	.47
Z2780510	K13N	13	6.7	95	45	25	1.01
Z2780529	K16N	16	10.0	118	54	29	1.66
Z2780538	K19N	19	14.0	134	64	34	2.78
Z2780547	K23N	23	21.0	121	64	45	4.26
Z2780556	K26N	26	27.0	140	82	48	6.30
Z2780574	K32N	32	40.0	178	96	64	11.48

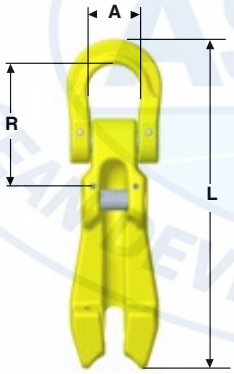

Shortening Clutch KSC N

Unique component for leg length adjustment. It accommodates loads of irregular shape or with a general lack of headroom and allows safe leg length adjustment of any number of legs with the load remaining fully in line.

Stock No.	Model	WLL 8+10	Dimensions (mm)			Weight (kg)
			L	R	A	
Z2780716	KSC7N	2.0	161	60	26	.53
Z2780725	KSC10N	4.0	211	73	36	1.28
Z2780734	KSC13N	6.7	272	95	46	2.7
Z2780743	KSC16N	10.0	360	118	56	5.26
Z2780752	KSC19N	14.0	427	134	68	9.87

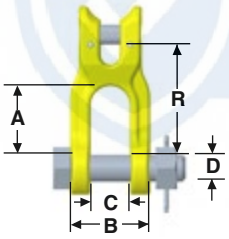

Narrow Jaw Shackle KDN

Narrow jaw shackle for connection from pad eye or similar directly to chain.

Stock No.	Model	WLL 8+10	Dimensions (mm)					Weight (kg)
			A	B	C	R	D	
Z2781369	KDN7N	2.0	36	42	20	57	14	.26
Z2781378	KDN10N	4.0	53	58	28	83	20	.85
Z2781387	KDN13N	6.7	72	74	35	106	24	1.68
Z2781396	KDN16N	10.0	83	90	44	127	30	3.14

Copyright © 2023 The Crosby Group LLC All Rights Reserved

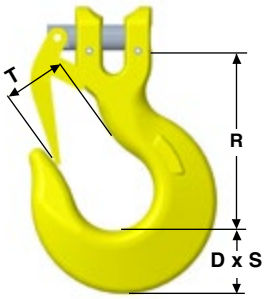

Sling Hook KHN L

This hook is most widely used in general purpose slinging.

Stock No.	Reference	WLL (t) 8	WLL (t) 8+10	Dimensions (mm) R	D	S	T No Latch	T With Latch	Weight (kg) No Latch	Weight (kg) With Latch
Z2780887	*KH23	16	21	222	79	51	76	60	11.39	13.14
Z2780896	*KH26	21.2	27	251	89	60	85	72	16.06	18.94
Z2780903	KHN32L	31.5	40	334	118	85	113	106	32.66	34.61

Safety Latch KHL N

A robust latch to prevent accidental detachment of the load.

Stock No.	Reference	Part Number	Hook Reference
2780967	KHL32N	2781939	KHN32

Hook Latch Assembly KHL

This assembly is for use with KH23 and KH26 and comprises a load pin to which the latch is attached.

Stock No.	Reference	Part Number	Hook Reference
2780976	KHL23	2780887	KH23
2780985	KHL26	2780896	KH26

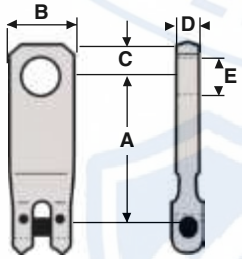

Top Suspension Plates

Stock No.	Type Size/ Reference	WLL (t) 8	WLL (t) 8+10	Dimensions (mm) A	B	C	D	E	Weight (kg)
Z2781555	C151401	5.3	6.7	153	62	32	20	36	1.59
Z2781564	C151402	5.3	6.7	140	62	32	20	36	1.52

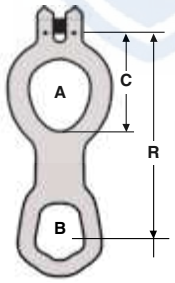

Keep Plate C2247

Stock No.	Type Size/ Reference	WLL (t) 8	WLL (t) 8+10	Dimensions (mm) A	B	C	R	Weight (kg)
Z2781617	C2247	5.3	6.7	95 x 76	74 x 58	133	301	3.48

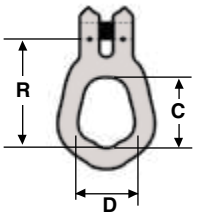

Single Trunnion Plate C1513

Stock No.	Type Size/ Reference	WLL (t) 8	WLL (t) 8+10	Dimensions (mm) R	C	D	Weight (kg)
Z2781626	C1513	5.3	6.7	112	74	58	1.5

Copyright © 2023 The Crosby Group LLC All Rights Reserved

Roller-Bearing Swivel, SKLI/SKLU

Electrically insulated, lubricated, sealed roller bearing swivel. Fully rotational even at maximum load. Tested to resist 1000 V. Suitable for protection of overhead cranes during welding operations on suspended loads.

The Gunnebo Industries SKLI is equipped with a heavy duty roller bearing, enabling high durability and safe use also under severe load. It also has heavy duty nylon insulation inside to decrease friction when in use. The SKLI is compatible with the entire Gunnebo Industries SK-range for versatile use.

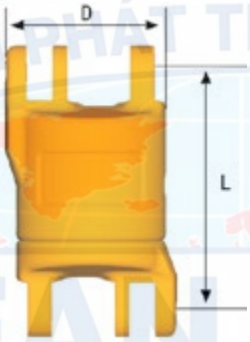

Roller-bearing Swivel SKLI/SKLU

For use with Grade 80 chain.

Stock No.	Code	WLL (t)	Dimensions (mm)		Weight (kg)
			L	D	
Z100316	SKLI-7/8-8	2.0	75	48	0.7
Z100414	SKLI-10-8	3.2	97	59	1.3
Z100415	SKLI-13-8	5.4	120	75	2.8
Z100416	SKLI-16-8	8.0	137	90	4.6
Z100417	SKLI-18/20-8	12.8	159	104	7.3
RS16520	SKLU-22-8*	15.5	160	109	9.2
RS16530	SKLU-26-8*	21.7	207	135	18.3

4:1 Design Factor. Fulfills requirements in: EN 1677:2008, ISO 8539:2009, ASTM A952/A952M and AS 3776:2015.
* Uninsulated

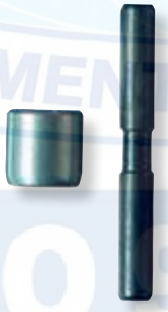

Load Pin and Locking Collar – SKA

For use with Grade 80 chain.

Stock No.	Code	Weight (kg)
Z700674	SKA-6-8	0.01
Z323624	SKA-7/8-8	0.02
Z318024	SKA-10-8	0.04
Z303822	SKA-13-8	0.08
Z303725	SKA-16-8	0.14
Z145048	SKA-18/20-8	0.26
Z133530	SKA-22-8	0.35
Z605407	SKA-26-8	0.63
Z650554	SKA-32-8	1.05

4:1 Design Factor.

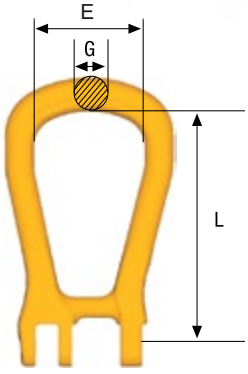

Master Link SKG (closed)

For use with Grade 80 chain. F or use with SK system.

Stock No.	Code	WLL (t)	Dimensions (mm)			Weight (kg)
			L	E	G	
Z419684	SKG-7/8-8	2.0	99	50	14	0.3
Z419781	SKG-10-8	3.2	127	66	18	0.6
Z419888	SKG-13-8	5.4	145	72	22	1.1
Z419985	SKG-16-8	8.2	175	82	25	1.5
Z420086	SKG-18/20-8	12.8	204	105	30	3.0

4:1 Design Factor. Fulfills requirements in: EN 1677:2008, ISO 8539:2009, ASTM A952/A952M and AS 3776:2015.

Copyright © 2023 The Crosby Group LLC All Rights Reserved

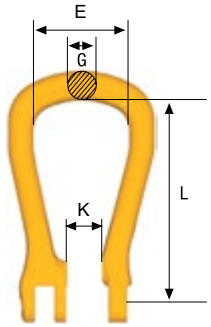

Master Link SKO (open)

For use with Grade 80 chain. For use with SK system.

Stock No.	Code	WLL (t)	Dimensions (mm)				Weight (kg)
			L	E	G	K	
Z418683	SKO-7/8-8	2.0	99	50	14	15	0.3
Z418780	SKO-10-8	3.2	127	66	18	20	0.6
Z419383	SKO-13-8	5.4	145	72	22	25	1
Z419480	SKO-16-8	8.2	175	82	25	30	1.5
Z419587	SKO-18/20-8	12.8	204	105	30	36	2.9

4:1 Design Factor. Fulfills requirements in: EN 1677:2008, ISO 8539:2009, ASTM A952/A952M and AS 3776:2015.

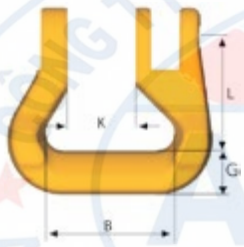

Roundsling Coupling SKR

Special shape for full WLL of the roundsling. For use with SK system.

Stock No.	Code	WLL (t)	Dimensions (mm)				Weight (kg)
			L	B	G	K	
Z127840	SKR-7/8-8	2.0	35	40	13	18	0.2
Z143143	SKR-10-8	3.2	42	47	16	24	0.4
Z302538	SKR-13-8	5.4	50	53	19	29	0.7
Z143240	SKR-16-8	8.2	62	67	23	35	1.3
Z143347	SKR-18/20-8	12.8	71	80	28	43	1.9
Z100057	SKR-22-8	15.5	111	125	40	50	5.3
Z100055	SKR-26-8	21.7	129	150	48	58	8.9

4:1 Design Factor. Fulfills requirements in: EN 1677:2008, ISO 8539:2009, ASTM A952/A952M and AS 3776:2015.

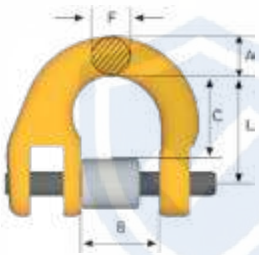

Half-link SKT (includes locking set)

For use with SK system.

Stock No.	Code	WLL (t)	Dimensions (mm)					Weight (kg)
			L	B	F	A	C	
Z426286	SKT-7/8-8	2.0	28	18	9	11	22	0.1
Z426383	SKT-10-8	3.2	34	25	11	13	26	0.2
Z426480	SKT-13-8	5.4	44	30	15	16	33	0.4
Z426587	SKT-16-8	8.2	52	36	19	20	40	0.6
Z426684	SKT-18/20-8	12.8	63	43	22	23	47	1.1
Z100225	SKT-22-8	15.5	76	50	24	26	59	1.7
Z100226	SKT-26-8	21.7	80	58	30	33	61	2.6
Z100227	SKT-32-8	32.8	100	70	38	40	78	4.9

4:1 Design Factor. Fulfills requirements in: EN 1677:2008, ISO 8539:2009, ASTM A952/A952M and AS 3776:2015.

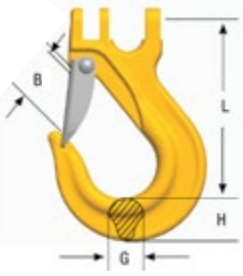

Sling Hook ESKN/SKN with Latch

For use with SK system.

Stock No.	Code	WLL (t)	Dimensions (mm)				Weight (kg)
			L	B	G	H	
Z424682	SKN-7/8-8	2.0	90	27	18	21	0.4
Z424789	SKN-10-8	3.2	115	34	23	29	0.8
Z101214	ESKN-13-8	5.4	145	42	28	36	1.8
Z100786	ESKN-16-8	8.2	178	52	36	43	3.4
Z100781	ESKN-18/20-8	12.8	197	54	42	51	5.0

4:1 Deisgn Factor. Fulfills requirements in: EN 1677:2008, ISO 8539:2009, ASTM A952/A952M and AS 3776:2015.

Copyright © 2023 The Crosby Group LLC All Rights Reserved

Safety Hook BKG

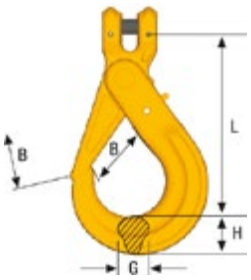

For use with Grade 80 chain.

Stock No.	Code	WLL (t)	Dimensions (mm)				Weight (kg)
			L	B	G	H	
Z297222	BKG-7/8-8	2.0	120	37	17	26	0.9
Z295929	BKG-10-8	3.2	143	45	21	30	1.5
Z291527	BKG-13-8	5.4	179	55	30	39	2.8
Z291624	BKG-16-8	8.2	217	62	37	48	5.1

4:1 Design Factor. Fulfills requirements in: EN 1677:2008, ISO 8539:2009, ASTM A952/A952M and AS 3776:2015.

Sling Hook EGKN with Latch

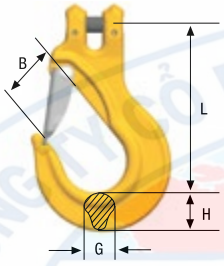

For use with Grade 80 chain.

Stock No.	Code	WLL (t)	Dimensions (mm)				Weight (kg)
			L	B	G	H	
Z100744	EGKN-7/8-8	2.0	95	29	17	22	0.5
Z100772	EGKN-10-8	3.2	121	37	20	29	0.9
Z100773	EGKN-13-8	5.4	147	42	27	36	2.0
Z100774	EGKN-16-8	8.2	170	52	34	44	3.6

4:1 Design Factor. Fulfills requirements in: EN 1677:2008, ISO 8539:2009, ASTM A952/A952M and AS 3776:2015.

Grab Hook OG

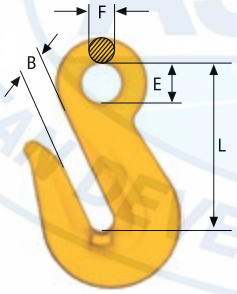

For use with Grade 80 chain. Not for use with Berglok. No reduction of working load limit, thanks to supporting lugs on either side of hook to prevent chain link deformation.

Stock No.	Code	WLL (t)	Dimensions (mm)				Weight (kg)
			L	B	E	F	
Z100811	OG-7/8-8	2.0	65	10	16	10	0.3
Z291022	OG-10-8	3.2	85	12	20	12	0.6
Z295220	OG-13-8	5.4	104	15	25	16	1.2
Z296221	OG-16-8	8.2	130	19	30	19	2.4

4:1 Design Factor. Fulfills requirements in: EN 1677:2008, ISO 8539:2009, ASTM A952/A952M and AS 3776:2015.

Clevis Swivel Safety Hook BKH

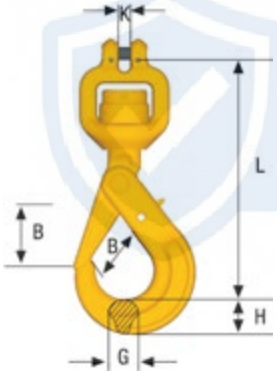

For use with Grade 80 chain. Safety hook with swivel for improved positioning of the hook before the load is lifted (360° rotation).

Stock No.	Code	WLL (t)	Dimensions (mm)					Weight (kg)
			L	B	K	G	H	
Z336222	BKH-6-8	1.1	145	29	6.8	15	21	0.7
Z700809	BKH-7/8-8	2.0	181	37	8.8	17	26	1.2

4:1 Design Factor. Fulfills requirements in: EN 1677:2008, ISO 8539:2009, ASTM A952/A952M and AS 3776:2015.

Container Hook BKGC

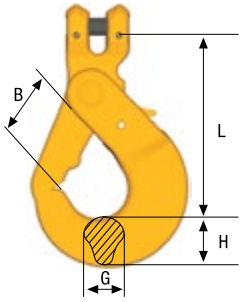

For use with Grade 80 chain.

Stock No.	Code	WLL (t)	Dimensions (mm)				Weight (kg)
			L	B	G	H	
Z100242	BKGC-16-8	8.2	160	55	27	43	3.4

4:1 Design Factor. Fulfills requirements in: EN 1677:2008, ISO 8539:2009, ASTM A952/A952M and AS 3776:2015.

Spare part: RDOBK

Copyright © 2023 The Crosby Group LLC All Rights Reserved

GUNNEBO Industries

Berglok Chain Coupler BL

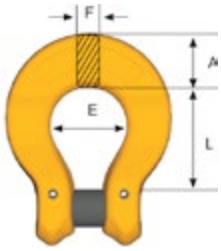

Stock No.	Code	WLL (t)	Dimensions (mm)				Weight (kg)
			L	E	F	A	
Z622036	BL-6-8	1.1	27	20	9	14	0.1
Z195823	BL-7/8-8	2.0	35	25	11	18	0.2
Z208022	BL-10-8	3.2	45	32	14	22	0.4
Z217820	BL-13-8	5.4	56	40	17	28	0.8
Z208226	BL-16-8	8.2	68	50	22	35	1.4

4:1 Deisgn Factor. Fulfills requirements in: EN 1677:2008, ISO 8539:2009, ASTM A952/A952M and AS 3776:2015.

Coupling Link G

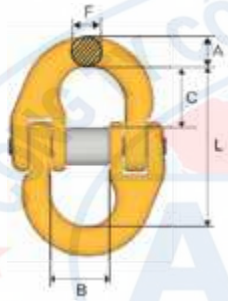

Stock No.	Code	WLL (t)	Dimensions (mm)					Weight (kg)
			L	B	F	A	C	
Z622882	G-6-8	1.1	45	15	7	8	17	0.1
Z279333	G-7/8-8	2.0	56	18	9	11	22	0.2
Z279430	G-10-8	3.2	68	25	11	13	26	0.3
Z279537	G-13-8	5.4	89	30	15	16	33	0.7
Z279634	G-16-8	8.2	105	36	19	20	40	1.2
Z279731	G-18/20-8	12.8	125	43	22	23	47	1.9
Z279838	G-22-8	15.5	152	50	24	26	59	3.0
Z349171	G-26-8	21.7	161	58	30	33	61	5.2
Z349189	G-32-8	32.8	200	70	38	40	77	9.5

4:1 Deisgn Factor. Fulfills requirements in: EN 1677:2008, ISO 8539:2009, ASTM A952/A952M and AS 3776:2015.

CÔNG TY CỔ PHẦN PHÁT TRIỂN KINH TẾ ĐÔNG NAM Á
ASEAN JSC.VN
ASEAN DEVELOPMENT JOINT STOCK COMPANY
ISO 9001:2015
Since 2006

Chain production plant in Gunnebo, Sweden

BEHIND THE SCENES

Get a behind-the-scenes look at some of our world-class manufacturing facilities across the globe.

Watch all videos at thecrosbygroup.com/facilities

Copyright © 2023 The Crosby Group LLC All Rights Reserved

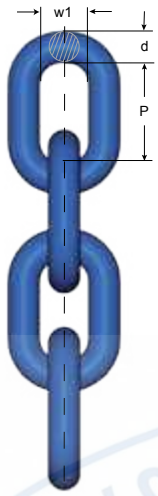

Chain, GrabiQ Grade 10 (200) Short link, KL

Heat treatment:
Quenched & Tempered
Note: For chain Grade 10 (200) the maximum in service temperature is 200°C.

Surface treatment:
Painted blue

Fulfills the requirements in:
ASTM A973/A973M-07(2012)
EN 818+2:2008 (WLL +25%, reduced temperature range)

Stock No. Box	Code	WLL (t)	Dimensions (mm)			Weight kg / m	MPF kN	Breaking Force (kN)
			d nom.	P	w1			
Z802300 - 1 x 200 m	KLA 6-10 (200)	1.5	6	18	8.5	0.8	36.8	58.9
Z802337 - 1 x 200 m	KLA 7-10 (200)	1.95	7	21	10.0	1.1	48	77
Z802301 - 1 x 200 m	KLA 8-10 (200)	2.6	8	24	11.0	1.4	63	102
Z802302 - 1 x 100 m	KLA 10-10 (200)	4.0	10	30	14.0	2.3	98	158
Z802303 - 1 x 100 m	KLA 13-10 (200)	6.8	13	39	18.8	4.0	166	268
Z802304 - 1 x 100 m	KLA 16-10 (200)	10.3	16	48	21.9	5.6	251	402
Z802305 - 1 x 50 m	KLA 20-10 (200)	16.0	20	60	27.0	9.4	393	630
Z802246 - 1 x 50 m	KLA 22-10 (200)	20.0	22	66	29.0	11.9	491	785
Z802248 - 1 x 50 m	KLA 26-10 (200)	27.0	26	78	35.0	16.4	664	1062
Z802440 - 1 x 25 m	KLA 32-10 (200)	40.0	32	96	41.6	25.8	981	1610

4:1 Design Factor

Chain, GrabiQ Grade 10 (400) Short link, KL

Heat treatment:
Quenched & Tempered
Note: For chain Grade 10 (400) the maximum in service temperature is 400°C.

Surface treatment:
Painted blue

Fulfills the requirements in:
EN 818-2:2008 (WLL+25%, material dimension Ø +10%)

Note: This chain is marked with "8+" in addition to the marking required by the machine directive.

Stock No. Box	Code	WLL (t)	Dimensions (mm)			Weight kg / m	MPF kN	Breaking Force (kN)
			d nom.	P	w1			
Z802306 - 1 x 200 m	KLA 6-10 (400)	1.5	6.6	18	8.9	1.0	36.8	58.9
Z802307 - 1 x 200 m	KLA 8-10 (400)	2.5	8.8	24	11.2	1.7	63	102
Z802308 - 1 x 100 m	KLA 10-10 (400)	4.0	11.0	30	14.4	2.6	98	158
Z802309 - 1 x 100 m	KLA 13-10 (400)	6.7	14.3	39	19.2	4.5	166	268
Z802310 - 1 x 100 m	KLA 16-10 (400)	10.0	17.3	48	23.0	6.7	251	402

4:1 Design Factor

Chain, Classic Grade 8 Short link, KL

Heat treatment:
Quenched & Tempered

Surface treatment:
Painted black (KLB)
Painted yellow (KLU)

Fulfills the requirements in:
EN 818-2:2008, AS 2321:2014, ASTM A391/A 391M-07 (2012)

Stock No. Box	Code	WLL (t)	Dimensions (mm)			Weight kg/m	Manufacturing Proof Force (kN)	Breaking Force (kN)
			d nom.	P	w1			
Z802174 - 1 x 200 m	KLB 6-8E	1.1	6	18	8.5	0.8	28.3	45.2
Z802175 - 1 x 200 m	KLB 7-8E	1.5	7	21	10.0	1.1	38.5	62
Z802176 - 1 x 200 m	KLB 8-8E	2.0	8	24	11.0	1.4	50.3	80.6
Z802156 - 1 x 100 m	KLB 10-8E	3.2	10	30	14.0	2.3	79	130
Z802157 - 1 x 100 m	KLB 13-8E	5.4	13	39	17.7	3.8	133	214
Z802177 - 1 x 100 m	KLB 16-8E	8.2	16	48	21.9	5.6	201	322
Z801203 - 1 x 100 m	KLB 19-8E	11.6	19	57	27.0	7.8	284	457
Z801228 - 1 x 50 m	KLB 22-8E	15.5	22	66	29.5	10.6	380	610
Z801231 - 1 x 50 m	KLB 26-8E	21.6	26	78	35.0	14.8	531	850
Z801232 - 1 x 25 m	KLB 32-8E	32.8	32	96	41.6	21.6	804	1300

4:1 Design Factor

Copyright © 2023 The Crosby Group LLC All Rights Reserved

Chain KLZ HDG

Heat treatment:
Quenched & Tempered

Surface treatment:
Hot-dip galvanized

Fulfills the requirements in:
EN 818-2:2008 (material dim. Ø +10%)
ISO 1461:2009
ASTM A391/A391M-07 2012 (material dim. Ø +10%)

Stock No.	Code	WLL (t)	Link Dimensions (mm)			Weight kg/ m	Manufacturing Proof Force (kN)	WLL (kN)	Delivery Length
			d	P	w1				
ZG802306	KLZ-6-8 HDG	1.1	6.6	18	8.9	1.0	36.8	45.2	1 x 100 m
ZG802307	KLZ-8-8 HDG	2.0	8.8	24	11.2	1.7	63.0	80.6	1 x 100 m
ZG802308	KLZ-10-8 HDG	3.2	11.0	30	14.4	2.6	98.0	130	1 x 100 m
ZG802309	KLZ-13-8 HDG	5.4	14.3	39	19.2	4.5	166	214	1 x 100 m
ZG802310	KLZ-16-8 HDG	8.2	17.3	48	23.0	6.7	251	322	1 x 100 m

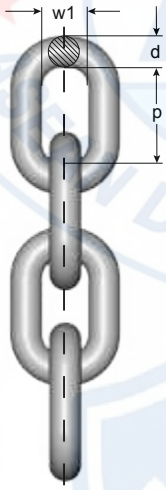

Short Link Chain KLFZ, Grade 7

Heat treatment:
Quenched & Tempered

Surface treatment:
Hot-dip galvanized

Not for lifting purposes

Stock No.	Code	Link Dimensions (mm)			Weight kg / m	Min. Breaking Load (kg)	Delivery Length
		d nom.	P	w1			
Z800666	KLFZ-10-7	10	30	14.0	2.2	11.0	1 x 100
Z800667	KLFZ-11-7	11	33	15.0	2.7	12.0	1 x 100
Z802329	KLFZ-13-7	13	39	17.2	3.8	18.0	1 x 100
Z803329	KLFZ-14-7	14	42	21.5	4.5	20.0	1 x 100
Z802901	KLFZ-16-7	16	48	47.0	5.6	26.7	1 x 100
Z801409	KLFZ-17-7	17	48	23.2	6.4	30.0	1 x 100
Z801407	KLFZ-19-7	19	57	27.0	8.1	40.0	1 x 100

Fulfills requirements in: EN 1461:2009 (Average surface thickness 85 µm)

ASEAN-JSC.VN
Since 2006

Copyright © 2023 The Crosby Group LLC All Rights Reserved

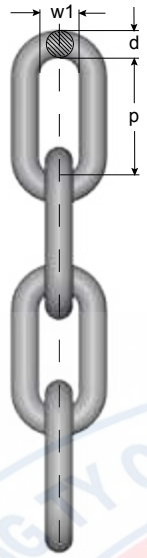

Mid-Link Chain MLFZ, Grade 7

Heat treatment:
Quenched & Tempered

Surface treatment:
Hot-dip galvanized

Not for lifting purposes

Stock No.	Code	Link Dimensions (mm)			Min. Breaking Load (ton)	Weight kg / m	Delivery Length
		d nom.	P	w1			
Z802455	MLFZ 10-6*	10	40	14.4	10	2.0	1 x 100 m
Z802335	MLFZ-13-7	13	55	20.2	18	3.3	1 x 100 m
Z801645	MLFZ-16-7	16	65	20.5	26.2	5.0	1 x 100 m
Z801477	MLFZ-19-7	19	75	29	37	7.1	1 x 100 m

Fulfills requirements in: EN 1461:2009 (Average surface thickness 85µm)
* Average surface thickness 70µm.

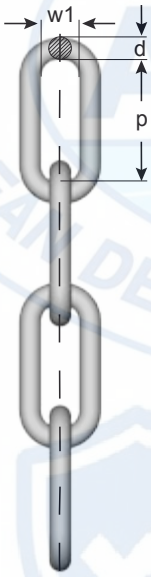

Long Link Chain LLZ, Grade 6

Heat treatment:
Quenched & Tempered

Surface treatment:
Hot-dip galvanized

Not for lifting purposes

Stock No.	Code	Link Dimensions (mm)			Min. Breaking Load (ton)	Weight kg / m	Delivery Length
		d nom.	P	w1 min			
Z802453	LLZ-9-6*	9	53	14.3	7.8	1.4	1 x 100 m
Z802454	LLZ-11-6*	11	64	18.5	11.6	2.1	4 x 100 m
Z800682	LLZ-13-6	13	80	21.1	16.3	2.9	3 x 100 m
Z802207	LLZ-13-6	13	80	21.1	16.3	2.9	1 x 229,5 m
Z801567	LLZ-16-6	16	100	27	24.7	4.6	1 x 100 m
GS1073	LLZ-16-6	16	100	27	24.7	4.6	1 x 200 m
Z801458	LLZ-19-6	19	100	28.5	34.8	6.5	1 x 120 m
Z801887	LLZ-22-6	22	120	36	46.6	8.7	1 x 50 m
Z802447	LLZ-25-6	25	140	37	60.0	12.0	1 x 50 m
Z802449	LLZ-28-6	28	150	39	75.3	14.9	1 x 50 m
Z802451	LLZ-32-6	32	170	44	98.3	19.0	1 x 50 m

Fulfills requirements in: EN 1461:2009 (Average surface thickness 85µm)
* Average surface thickness 70µm.

Copyright © 2023 The Crosby Group LLC All Rights Reserved

Short Link Chain KLFU, Grade 8

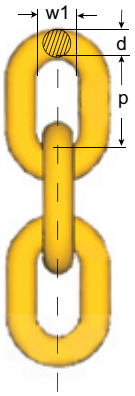

Heat treatment:
Quenched & Tempered,
Stress relieved

Surface treatment:
Painted yellow

Not for lifting purposes

Stock No.	Code	Link Dimensions (mm)			Weight kg / m	Min. Breaking Load (t)	Delivery Length
		d nom.	P	w1			
Z802330	KLFU-10-8	10	30	14.0	2.2	12.6	1 x 100 m
Z802331	KLFU-13-8	13	39	17.6	3.7	21.4	1 x 100 m
Z801146	KLFU-16-8	16	48	21.5	5.8	32.2	1 x 100 m
Z327377	KLFU-19-8	19	57	27.0	8.0	45.4	1 x 100 m
Z327385	KLFU-22-8	22	66	30.0	11.0	61	1 x 50 m
Z801505	KLFU-26-8	26	78	35.0	14.8	86	1 x 50 m

Mid-Link Chain MLFU, Grade 8

Heat treatment:
Quenched & Tempered,
Stress relieved

Surface treatment:
Painted yellow

Not for lifting purposes

Stock No.	Code	Link Dimensions (mm)			Weight kg / m	Min. Breaking Load (t)	Delivery Length
		d nom.	P	w1			
Z802332	MLFU-10-8	10	40	14.4	2.0	12.6	1 x 100 m
Z802333	MLFU-13-8	13	55	20.2	3.3	21.4	1 x 100 m
Z800564	MLFU-16-8	16	65	20.5	5.0	32.2	1 x 100 m
Z800476	MLFU-19-8	19	75	29.0	7.1	45.4	1 x 100 m
Z800661	MLFU-22-8	22	88	30.0	9.4	61	1 x 50 m
Z801770	MFLU-26-8	26	91	34.0	13.9	86	1 x 50 m

Long-Link Chain LLU, Grade 8

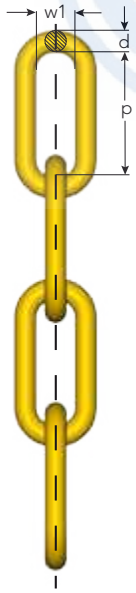

Heat treatment:
Quenched & Tempered,
Stress relieved

Surface treatment:
Painted yellow

Not for lifting purposes

Stock No.	Code	Link Dimensions (m)			Weight kg / m	Min. Breaking Load (t)	Delivery Length
		d	P	w1 min			
Z801934	LLU-9-8	9	53	14.3	1.4	10.2	4 x 100 m
Z801935	LLU-11-8	11	64	18.5	2.1	15.4	4 x 100 m
Z801936	LLU-13-8	13	80	21.1	2.9	21.4	3 x 100 m
Z802160	LLU-16-8	16	100	27.0	4.6	32.2	1 x 100 m
Z601983	LLU-19-8	19	100	27.0	6.5	45.4	1 x 100 m
Z700526	LLU-22-8	22	120	36.0	8.7	61	1 x 50 m

Copyright © 2023 The Crosby Group LLC All Rights Reserved

Spare Part RDGG

Spare part set consisting of pin, spring, and locking ring.

Stock No.	Code	Weight (kg)
B17930	RDGG-8-10 locking pin	0.03
B17931	RDGG-10-10 locking pin	0.04
B17932	RDGG-13-10 locking pin	0.05
B17933	RDGG-16-10 locking pin	0.06

Id-tag Grade 8

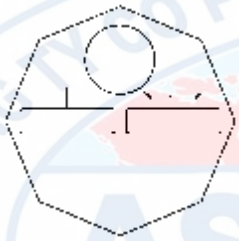

Stainless steel.

Stock No.	Code
Z100004	Id-tag

Sling Id-tag Grade 10

Stainless steel. Sling Id-tag Grade 10 according to EN 818.

Stock No.	Code
B14841	Flexitag 6 mm with ferrule and wire
B14842	Flexitag 8 mm with ferrule and wire
B14843	Flexitag 10 mm with ferrule and wire
B14844	Flexitag 13 mm with ferrule and wire
B14845	Flexitag 16 mm with ferrule and wire
Z100971	Flexitag 6 mm
Z100972	Flexitag 8 mm
Z100973	Flexitag 10 mm
Z100974	Flexitag 13 mm
Z100975	Flexitag 16 mm
Z101077	Flexitag 20 mm
Z100899	Flexitag Neutral

CÔNG TY CỔ PHẦN PHÁT TRIỂN KINH TẾ ĐÔNG NAM Á
ASEAN JSC.VN
ASEAN DEVELOPMENT JOINT STOCK COMPANY
ISO 9001:2015
Since 2006

Copyright © 2023 The Crosby Group LLC All Rights Reserved

Stainless steel. Sling Id-tag Grade 10 acc. to ASME.

Stock No.	Code
697053	US/CANADA FLEXI LEG TAG KIT (6MM)
697054	US/CANADA FLEXI LEG TAG KIT (8MM)
697055	US/CANADA FLEXI LEG TAG KIT (10MM)
697056	US/CANADA FLEXI LEG TAG KIT (13MM)
697057	US/CANADA FLEXI LEG TAG KIT (16MM)

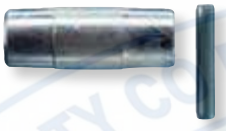

Load Pin Set CLS

Clevis connection set consisting of one load pin and one spring retaining pin.

Stock No.	Code	Weight (kg)
B14930	CLS- 6	0.01
B14931	CLS- 8	0.02
B14932	CLS-10	0.04
B14933	CLS-13	0.09
B14934	CLS-16	0.16
B14935	CLS-20	0.26

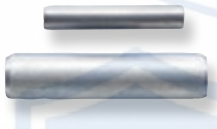

Assembly: C-coupling - C-grab/C-lok with MF

Spare Part CS

C-connection set for CG, CGD, CL, CLD, and RH hook, consisting of one blocking pin and one spring retaining pin, for locking.

Stock No.	Code	Weight (kg)
B14920	CS- 6-10	0.01
B14921	CS- 8-10 / RH-1& -2	0.01
B14922	CS-10-10 / RH-3	0.01
B14923	CS-13-10	0.03
B14924	CS-16-10 / RH-5	0.05

Close/Open Locking Set FlexiLeg Quick Pin

Stock No.	Code	Weight (kg)
Z101010	QP-6-10	0.01
Z101011	QP-8-10	0.01
Z101012	QP-10-10	0.01
Z101013	QP-13-10	0.03
Z101014	QP-16-10	0.06

Copyright © 2023 The Crosby Group LLC All Rights Reserved

Locking Set SKA

SKA locking set for G-link, consists of a load pin and locking collar.

Stock No.	Code	Weight (kg)
Z100989	SKA- 6-10	0.01
Z100933	SKA- 7/8-10	0.02
Z100934	SKA-10-10	0.04
Z100990	SKA-13-10	0.08
Z100991	SKA-16-10	0.14
Z101176	SKA-20-10	0.26
Z650555	SKA-22-10	0.35
Z650556	SKA-26-10	0.63
Z650557	SKA-32-10	1.09

Stock No.	Code	Weight (kg)
Z700674	SKA-6-8	0.01
Z323624	SKA-7/8-8	0.02
Z318024	SKA-10-8	0.04
Z303822	SKA-13-8	0.08
Z303725	SKA-16-8	0.14
Z145048	SKA-18/20-8	0.26
Z133530	SKA-22-8	0.35
Z605407	SKA-26-8	0.63
Z650554	SKA-32-8	1.05

Load Pin Set Berglok BLA

Set for Berglok and clevis type connections. Consists of one load pin and two retaining pins.

Stock No.	Code	Weight (kg)
Z275649	BLA-6-8*	0.01
Z275347	BLA-7/8-8*	0.02
Z275444	BLA-10-8	0.04
Z275648	BLA-13-8	0.08
Z276047	BLA-16-8	0.15
Z276241	BLA-19-8	0.26

* Also for Safety hook BKH

Locking Set Midgrab MIG

C - Close/open function

L - Permanent locking function

Stock No.	Code	Weight (kg)
B14904	C-8	0.02
B14905	L-8	0.02
B14914	C-10	0.02
B14915	L-10	0.02
B14916	C-13	0.08
B14917	L-13	0.05

Copyright © 2023 The Crosby Group LLC All Rights Reserved

TO MAKE YOUR CROSBY® GRADE 100 ALLOY CHAIN SLING

Follow these simple steps in making a sling assembly:

1. Determine the maximum load to be lifted by the sling assembly.
2. Choose the type of sling assembly suited for the shape of the load and the size of the sling assembly for the load to be lifted. The decision must take into account the angle of the sling legs in multileg slings.
3. Determine the overall reach from bearing point of master link to bearing point on hook (see Fig. 1).
4. Select components, assemble chain and components.
5. Affix sling identification tag to sling. The tag is available from your authorized Crosby distributor.

Each sling shall be marked to show: name or trademark of manufacturer, grade, nominal chainsize, number of legs, rated load for the type(s) of hitch(es) used and angle upon which it is based (reach).

If measurement comes in the link, cut the following link. For two leg type slings, count the links and use an even number for clevis hooks and an odd number for eye hooks. This will position hooks in the same plane. In multileg slings always use the same number of links in each leg.

When using chain slings in choker applications, the Working Load Limit must be reduced by 20%. Crosby recommends a minimum angle of choke of 120 degrees. Consult Crosby when planning to use an angle of choke of less than 120 degrees. If Crosby A-1338 cradle grab hooks are used at a minimum angle of choke of 120 degrees, the full sling rated WLL can be utilized.

In shortening applications, a 20% reduction of the Working Load Limit is required except when using the Crosby A-1338 Cradle Grab Hooks, S-1311 Chain Shortener Link, the A-1355 Chain Choker Hook in conjunction with the S-1325 Chain Coupler Link, or the Crosby Eliminator® shortener link. They can be used without any reduction to the Working Load Limit.

The Slings shown below are standard assemblies that can be made from proof tested Crosby components and alloy chain supplied by your authorized Crosby distributor. Assemblies must include a chain sling identification tag.

APPLICATION AND WARNING INFORMATION
SECTION 17

TYPE CO | TYPE SOS | TYPE SOG | TYPE SOF | TYPE SSS | TYPE SGS | TYPE ASOS | TYPE ASOF | TYPE ASOG | TYPE SOCH

Type	Description	Type	Description
CO	Single chain sling with master link each end	SGS	Single chain sling with grab hook and sling hook
SOS	Single chain sling with master link and sling hook	ASOS	Adjustable single chain with master link and sling hook
SOG	Single chain sling with master link and grab hook	ASOF	Adjustable single chain sling with master link and foundry hook
SOF	Single chain sling with master link and foundry hook	ASOG	Adjustable single chain sling with master link and grab hook
SSS	Single chain sling with sling hook each end	SOCH	Single with 1355 choker

TYPE DOS | TYPE DOG | TYPE DOF | TYPE ADOS | TYPE ADOG | TYPE DOCH

Type	Description	Type	Description
DOS	Double chain sling with master link and sling hook	ADOS	Adjustable double chain sling with master link and sling hook
DOG	Double chain sling with master link and grab hook	ADOG	Adjustable double chain sling with master link and grab hook
DOF	Double chain sling with master link and foundry hook	DOCH	Double with 1355 choker

TYPE TOS | TYPE TOG | TYPE TOF | TYPE TOCH | TYPE QOS | TYPE QOG | TYPE QOF

Type	Description	Type	Description
TOS	Triple chain sling with master link and sling hook	QOS	Quadruple chain sling with master link and sling hook
TOG	Triple chain sling with master link and grab hook	QOG	Quadruple chain sling with master link and grab hook
TOF	Triple chain sling with master link and foundry hook	QOF	Quadruple chain sling with master link and foundry hook
TOCH	Triple with 1355 choker		

Copyright © 2023 The Crosby Group LLC All Rights Reserved

TO ORDER YOUR CROSBY ELIMINATOR® GRADE 100 ALLOY CHAIN SLING

Follow these simple steps to order a sling assembly:

1. Determine the maximum load to be lifted by the sling assembly.
2. Choose the type of sling assembly suited for the shape of the load and the size of the sling assembly for the load to be lifted. The decision must take into account the angle of the sling legs in multileg slings.
3. Determine the overall reach from bearing point of Eliminator Bail to bearing point on hook (see Fig. 1).
4. Select components, assemble chain and components.
5. Affix sling identification tag to sling. The tag is available from your authorized Crosby distributor.

Fig. 1

Each sling shall be marked to show: name or trademark of manufacturer, grade, nominal chain size, number of legs, rated load for the type(s) of hitch(es) used and angle upon which it is based (reach).

When using chain slings in choker applications, the Working Load Limit must be reduced by 20%. Crosby recommends a minimum angle of choke of 120 degrees. Consult Crosby when planning to use an angle of choke of less than 120 degrees. If Crosby A-1338 cradle grab hooks are used at a minimum angle of choke of 120 degrees, the full sling rated WLL can be utilized.

In shortening applications, a 20% reduction of the Working Load Limit is required except when using the Crosby A-1338 Cradle Grab Hooks, S-1311 Chain Shortener Link, the A-1355 Chain Choker Hook in conjunction with the S-1325 Chain Coupler Link, or the Crosby Eliminator® shortener link. They can be used without any reduction to the Working Load Limit.

APPLICATION AND WARNING INFORMATION
SECTION 17

TYPE ESO

TYPE ESOS

TYPE ESOG

TYPE ESOL

TYPE ESOF

Type	Description	Type	Description
ESOS	Crosby Eliminator® single chain sling with sling hook	ESOL	Crosby Eliminator® single chain with SHUR-LOC® hook
ESOG	Crosby Eliminator® single chain sling with grab hook	ESOF	Crosby Eliminator® single chain with foundry hook

TYPE EDO

TYPE EDOS

TYPE EDOG

TYPE EDOL

TYPE EDOF

Type	Description	Type	Description
EDOS	Crosby Eliminator® double chain sling with sling hooks	EDOL	Crosby Eliminator® double chain with SHUR-LOC® hooks
EDOG	Crosby Eliminator® double chain sling with grab hooks	EDOF	Crosby Eliminator® double chain with foundry hooks

TYPE ETOS

TYPE ETOG

TYPE ETOL

TYPE ETOF

TYPE EQOS

TYPE EQOG

TYPE EQOL

TYPE EQOF

Type	Description	Type	Description
ETOS	Crosby Eliminator® triple chain sling with master link and sling hooks	EQOS	Crosby Eliminator® quad chain sling with master link and sling hooks
ETOG	Crosby Eliminator® triple chain sling with master link and grrab hooks	EQOG	Crosby Eliminator® quad chain sling with master link and grab hooks
ETOL	Crosby Eliminator® triple chain sling with master link and SHUR-LOC® hooks	EQOL	Crosby Eliminator® quad chain sling with master link and SHUR-LOC® hooks
ETOF	Crosby Eliminator® triple chain sling with master link and foundry hooks	EQOF	Crosby Eliminator® quad chain sling with master link and foundry hooks

Copyright © 2023 The Crosby Group LLC All Rights Reserved

Crosby

Peerless 10
Alloy Chain

- 25% stronger than Grade 80 alloy chain.
- Permanently embossed with CG (Crosby Group) and 10 (Grade).
- Finish - red paint for 6-16mm and black paint for 20-32mm.
- Meets ASTM A973 for Grade 10 chain.
- Proof Tested at 2.5 times the Working Load Limit with certification.

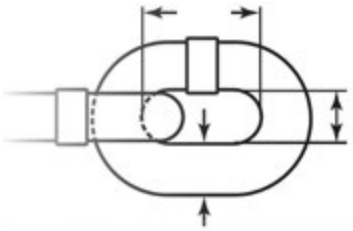

Grade 100 Alloy Chain Recommended for overhead lifting applications

Chain Size (mm)	Stock No.	Meters Per Drum / Crate	Working Load Limit (t)	Dimensions (mm)			Breaking Force (kN)	Manufacturing Proof Force (kN)	Weight Per meter (kg/m)
				d nom.	P	w1			
6	1224693	200	1.5	6	18	8.5	58.9	36.8	0.9
7	1210055	200	1.95	7	21	10	77	48	1.2
8	1210076	200	2.6	8	24	11	102	63	1.6
10	1210097	200	4.0	10	30	14	158	98	2.5
13	1210118	150	6.8	13	39	18.8	268	166	4.1
16	1210139	100	10.3	16	48	21.9	402	251	6.2
20	1210060	50	16.0	20	60	27	630	393	9.4
23	1210065	50	21.0	23	69	27.5	831	515	13.0
26	1210070	50	27.1	26	78	35	1062	664	16.4
32	1210075	25	41.0	32	96	41.6	1610	1005	25.8

4:1 Design Factor.

A-1337

- Suitable for use with both Grade 80 and Grade 100 chain.
- Individually Proof Tested at 2-1/2 times Working Load Limit with certification.
- Locking system that provides for simple assembly and disassembly - no special tools needed.
- Meets ASTM A-952 standards for Grade 100 chain fittings.
- Forged alloy steel — Quenched & Tempered.
- Sizes 7mm through 26mm are fatigue rated.

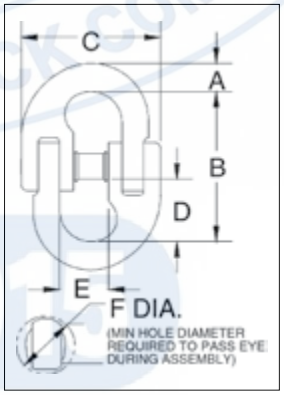

Crosby 8/10™ Fatigue Rated QT

A-1337 LOK-A-LOY® 10 Alloy Connecting Link

Chain Size		Stock No.	Pkg. Qty.	Weight Each (kg)	Working Load Limit (t)	Dimensions (mm)					
(in)	(mm)					A	B	C	D	E	F
9/32 (1/4)	7	1015104	60	.13	2.0	9.7	49.3	50.8	20.3	17.3	13.5
5/16	8	1015113	50	.19	2.6	9.4	59.9	54.1	25.1	18.3	15.0
3/8	10	1015122	40	.35	4.0	13.0	67.3	64.8	27.7	23.1	18.5
1/2	13	1015136	12	.73	6.8	17.3	87.9	86.1	36.8	28.7	22.6
5/8	16	1015145	10	1.41	10.3	19.8	108.0	101.6	45.0	34.0	30.5
3/4	20	1015154	1	2.90	16.0	25.7	130.6	134.6	54.6	41.7	39.6
7/8	22	1015163	1	3.56	19.4	27.7	138.7	146.8	57.7	50.0	39.4
1	26	1015172	1	5.01	27.1	31.5	150.9	165.1	61.2	56.1	47.8
1-1/4	32	1015181	1	9.53	41.0	39.6	188.7	193.0	78.0	65.3	56.4

4:1 Design Factor.

Copyright © 2023 The Crosby Group LLC All Rights Reserved

Peerless 8
Alloy Chain

- Finish – black paint.
- Permanently embossed with CG (Crosby Group) and 8 (Grade).
- Proof Tested at 2.5 times the Working Load Limit with certification.
- Meets EN 818-2 for Grade 8 chain.

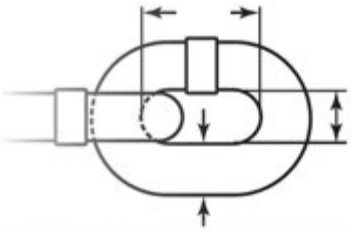

Grade 80 Alloy Chain Recommended for overhead lifting applications

Chain Size (mm)	Stock No.	Meters Per Drum / Crate	Working Load Limit (t)	Dimensions (mm)			Breaking Force (kN)	Manufacturing Proof Force (kN)	Weight Per meter (kg/m)
				d nom.	P	w1			
6	1244915	200	1.1	6	18	8.5	45.2	28.3	0.8
7	1244985	200	1.5	7	21	10	62	38.5	1.1
8	1245055	200	2.0	8	24	11	80.6	50.3	1.4
10	1245125	200	3.2	10	30	14	130	79	2.3
13	1245195	150	5.4	13	39	18.8	214	133	3.8
16	1245265	100	8.2	16	48	21.9	322	201	5.6
19	1245360	50	11.6	19	57	27	457	284	7.8
20	1245364	50	12.8	20	60	25	504	315	9.9
22	1245368	50	15.5	22	66	29.5	610	380	10.6
23	1245372	50	16.0	23	69	32	665	415	11.8
26	1245376	50	21.6	26	78	35	850	531	14.8
32	1245380	50	32.8	32	96	41.6	1300	804	21.6

4:1 Design Factor.

Crosby provides two methods of attaching Spectrum 8® chain to Crosby fittings:

CONNECTING AND COUPLER CHAIN LINKS

A-1337
LOK-A- LOY®
Connecting Link

S-1325
Grade 100
Coupler Link

CÔNG TY CỔ PHẦN PHÁT TRIỂN KINH TẾ ĐÔNG NAM Á
ASEANUSC.VN
ASEAN DEVELOPMENT JOINT STOCK COMPANY
ISO 9001:2015
Since 2006

Copyright © 2023 The Crosby Group LLC All Rights Reserved

Crosby

A-1361
Single Hook

A-1362
Double Hook

- The Crosby Eliminator® combines selected features and functionality of a master link, connecting link, grab hook and adjuster legs to provide you with one fitting that is suitable for applications that require an adjustable length chain sling.
- Forged alloy steel — Quenched & Tempered.
- Innovative two piece design allows for maximum flexibility.
- Individually Proof Tested with certification.
- The Crosby Eliminator, with a properly installed and locked latch pin, can be used for personnel lifting applications and meets the intent of OSHA Rule 1926.1431(g)(1)(i)(A) and 1926.1501(g)(4)(iv)(B).
- Suitable for use with Grade 100 and Grade 80 chain.
- Engineered to accommodate optional locking pins that can be inserted to lock the shortened chain legs into place.
- Fatigue rated at 1-1/2 times the Working Load Limit at 20,000 cycles.
- Use the A-1361 and A-1362 in combination to make 3 leg chain slings.
- Load pin assembly instructions available.

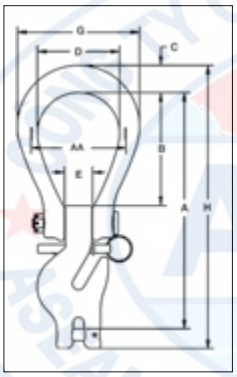

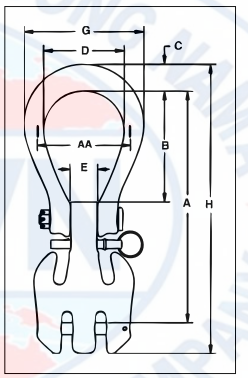

APPLICATION AND WARNING INFORMATION
SECTION 17

Crosby 8/10™ Fatigue Rated QUIC-CHECK® Q&T

A-1361 Crosby Eliminator® Single Hook

Chain Size (in)	Chain Size (mm)	Frame Size	Working Load Limit (t)	A-1361 Stock No.	L-1361 Stock No.	Weight Each (kg)	Dimensions (mm) A	B	C	D	E	G	H	AA	S-4104N Replacement Latch Pin Stock No.
1/4	7	2	2.0	1049797	1049802	1.76	208	99.0	22.9	76.2	23.9	89.0	112	248	1092983
5/16	8	2	2.6	1049804	1049809	1.76	208	99.0	22.9	76.2	23.9	89.0	112	248	1092983
3/8	10	3	4.0	1049813	1049818	2.94	255	122	29.5	88.9	28.7	102	132	306	1092992
1/2	13	4	6.8	1049822	1049827	6.12	327	152	41.4	105	33.3	127	162	395	1093001
5/8	16	5	10.3	1049831	1049836	10.9	388	175	49.8	121	41.4	152	188	472	1093010

4:1 Design Factor. Proof tested at 2.5 times the Working Load Limit.

A-1362 Crosby Eliminator® Double Hook

Chain Size (in)	Chain Size (mm)	Frame Size	Working Load Limit (t)	A-1362 Stock No.	L-1362 Stock No.	Weight Each (kg)	Dimensions (mm) A	B	C	D	E	G	H	AA	S-4104N Replacement Latch Pin Stock No.
1/4	7	2	3.9	1049859	1049913	2.13	208	99.0	22.9	76.2	23.9	89.0	112	257	1092983
5/16	8	2	5.0	1049868	1049922	2.13	208	99.0	22.9	76.2	23.9	89.0	112	257	1092983
3/8	10	3	8.0	1049877	1049931	3.67	255	122	29.5	88.9	28.7	102	132	319	1092992
1/2	13	4	13.6	1049886	1049940	7.84	327	152	41.4	105	33.3	127	162	413	1093001
5/8	16	5	20.5	1049895	1049949	14.3	388	175	49.8	121	41.4	152	188	491	1093010

4:1 Design Factor. Proof tested at 2.5 times the Working Load Limit.

Using Crosby ELIMINATOR® in 3 and 4 Leg Slings

Spectrum 10 Chain Size (in)	Spectrum 10 Chain Size (mm)	Master Link A-342 Stock No.	Master Link A-1343 Stock No.	Crosby ELIMINATOR® Single A-1361 Stock No.	Crosby ELIMINATOR® Double A-1362 Stock No.
1/4	7	1014285	1247096	1049797	1049859
5/16	8	1014319	1247122	1049804	1049868
3/8	10	1014331	1247124	1049813	1049877
1/2	13	1014348	1247151	1049822	1049886
5/8	16	1014365	1247163	1049831	1049895

Use one of either A-342 or A-1343 master link.
Use one of each when making 3-leg sling.
Use two A-1362 fittings when making quad leg sling.

Copyright © 2023 The Crosby Group LLC All Rights Reserved

A -1338 **L-1338**

- Forged alloy steel — Quenched & Tempered.
- Innovative cradle design allows for 100% efficiency of Grade 100 chain.
- Individually Proof Tested to 2-1/2 times the Working Load Limit with certification.
- Each hook has a Product Identification Code (PIC) for material traceability, along with the size and the name Crosby.
- Suitable for use with Grade 100 and Grade 80 chain.
- The use of A-1338 Cradle Grab Hook will allow 100 percent of the chain sling capacity. When used to hook back to chain leg to form a choker, the angle of the choke must be 120 degrees or greater. When used as a chain shortener, minimize twist of chain and ensure chain is fully engaged in hook.
- Fatigue rated to 20,000 cycles at 1-1/2 times the Working Load Limit.

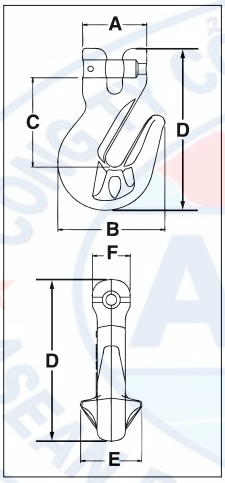

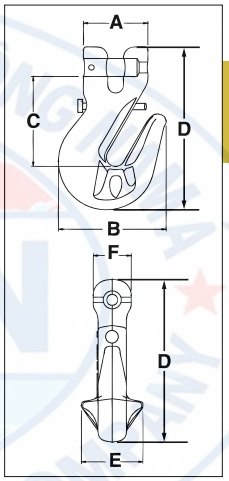

6

A/L-1338 Cradle Grab Hook

Chain Size (in)	Chain Size (mm)	Working Load Limit (t)	A-1338 Stock No.	L-1338 Stock No.	Weight Each (kg)	Dimensions (mm) A	B	C	D	E	F	S-4338 Replacement Latch Kit Stock No.
1/4	7	2.0	1049417	1049480	.20	43.7	64.5	55.9	98.5	38.1	22.4	1048426
5/16	8	2.6	1049426	1049489	.45	43.7	64.5	55.4	98.5	38.1	22.4	1048426
3/8	10	4.0	1049435	1049498	.82	47.0	78.5	65.5	119	46.5	27.7	1048435
1/2	13	6.8	1049444	1049507	1.78	60.7	97.3	83.3	149	57.2	36.1	1048444
5/8	16	10.3	1049453	1049516	3.18	67.8	115	97.8	179	74.5	44.5	1048453

4:1 Design Factor.

A -1358 **L -1358**

APPLICATION AND WARNING INFORMATION
SECTION 17

- Forged alloy steel — Quenched & Tempered.
- Individually Proof Tested to 2-1/2 times the Working Load Limit with certification.
- Each hook has a Product Identification Code (PIC) for material traceability, along with the size and the name Crosby.
- Suitable for use with Grade 100 and Grade 80 chain.
- Fatigue rated to 20,000 cycles at 1-1/2 times the Working Load Limit.

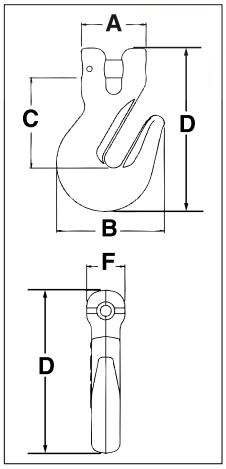

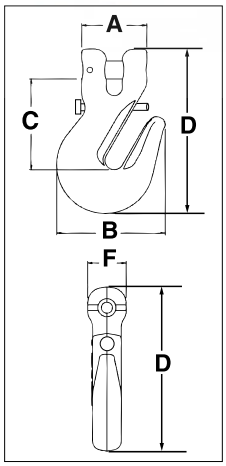

A/L-1358 Grab Hook

Chain Size (in)	Chain Size (mm)	Working Load Limit (t)	A-1358 Stock No.	L-1358 Stock No.	Weight Each (kg)	Dimensions (mm) A	B	C	D	F	S-4338 Replacement Latch Kit Stock No.
1/4	7	2.0	1049610	1049605	.20	43.7	64.5	55.9	98.5	22.4	1048426
5/16	8	2.6	1049629	1049614	.45	43.7	64.5	55.4	98.5	22.4	1048426
3/8	10	4.0	1049638	1049623	.82	47.0	78.5	65.5	119	27.7	1048435
1/2	13	6.8	1049647	1049634	1.78	60.7	97.3	83.3	149	36.1	1048444
5/8	16	10.3	1049656	1049643	3.18	67.8	115	97.8	179	44.5	1048453

4:1 Design Factor.

Copyright © 2023 The Crosby Group LLC All Rights Reserved

Crosby

A-1370

- Forged alloy steel — Quenched & Tempered.
- Individually proof tested to 2.5 times the Working Load Limit.
- Proof test certification shipped with each link.
- Each link has a Product Identification Code (PIC) for material traceability, along with the size and the name Crosby in raised letters.
- Suitable for use with Grade 100 and Grade 80 chain.

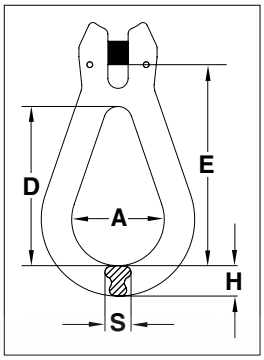

Crosby 8/10™ Q&T

A-1370 Reeving Link

Chain Size (in)	Chain Size (mm)	Working Load Limit (t)	Stock No.	Weight Each (kg)	Dimensions (mm) A	D	E	H	S
1/4-5/16	7-8	2.5	1012000	0.26	39.0	67.5	90.0	16.0	10.0
3/8	10	4.0	1012009	0.50	49.0	85.5	108	17.0	14.0
1/2	13	6.8	1012018	1.10	62.5	108	138	21.0	18.0
5/8	16	10.3	1012027	2.55	79.0	139	180	30.5	25.5

4:1 Design Factor.

L-1339

- Forged alloy steel — Quenched & Tempered.
- Individually Proof Tested to 2-1/2 times the Working Load Limit with certification.
- Each hook has a Product Identification Code (PIC) for material traceability, along with the size and the name Crosby.
- Hoist hooks incorporate QUIC-CHECK® deformation and angle indicators.
- Low profile hook tip.
- New integrated latch (S-4320/S-4339) meets the world standard for lifting.
  - Heavy duty stamped latch interlocks with the hook tip.
  - High cycle, long life spring.
  - When secured with the proper cotter pin through the hole in the tip of hook, meets the intent of OSHA Rule 1926.1431(g) and 1926.1501(g) for personnel lifting.
- Suitable for use with Grade 100 and Grade 80 chain.
- Fatigue rated at 1-1/2 times the Working Load Limit at 20,000 cycles.

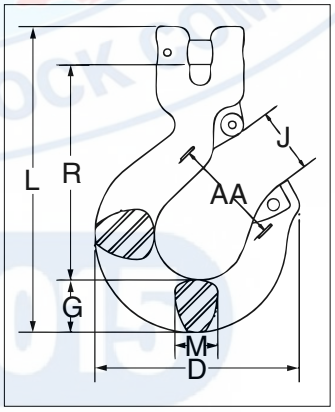

L-1339 Clevis Sling Hook

Chain Size (in)	Chain Size (mm)	Working Load Limit (t)	Hook ID Code	Stock No.	Weight Each (kg)	Dimensions (mm) D	G	J	L	M	R	AA	S-4320 Repl. Latch Stock No.	S-4339 Repl. Latch Stock No.
-	6	1.5	DA	1049103	0.29	72.6	18.5	23.6	107	16.0	74.9	38.1	1096325	-
1/4	7	2.0	HA	1049112	0.72	98.0	26.4	30.2	144	19.1	101	50.8	1096468	-
5/16	8	2.6	HA	1049121	0.71	98.0	26.4	30.2	144	19.1	100	50.8	1096468	-
3/8	10	4.0	IA	1049130	1.17	111	30.2	38.9	171	25.4	120	63.5	1096515	-
1/2	13	6.8	JA	1049149	2.39	142	36.6	45.2	213	29.7	150	76.2	1096562	-
5/8	16	10.3	KA	1049158	4.45	172	48.0	61.2	259	36.6	177	102	1096609	-
3/4	18-20	16.0	KHX19	1049167	8.30	211	71.9	68.3	332	50.0	203	114	-	1048714
7/8*	22-23*	21.0	KHX23	1049176	11.2	233	78.0	77.5	355	50.0	223	127	-	1048732

4:1 Design Factor.
*7/8 in (22-23 mm) size does not have cam, latch attaches to unique pin.

Copyright © 2023 The Crosby Group LLC All Rights Reserved

A-1359

- Forged alloy steel — Quenched & Tempered.
- Individually Proof Tested to 2-1/2 times the Working Load Limit with certification.
- Each hook has a Product Identification Code (PIC) for material traceability, along with the size and the name Crosby.
- Suitable for use with Grade 100 and Grade 80 chain.
- Fatigue rated to 20,000 cycles at 1-1/2 times the Working Load Limit.
- Hook can be tip loaded at the reduced Working Load Limit, see below.
- Operator must ensure the load is retained properly in the hook.

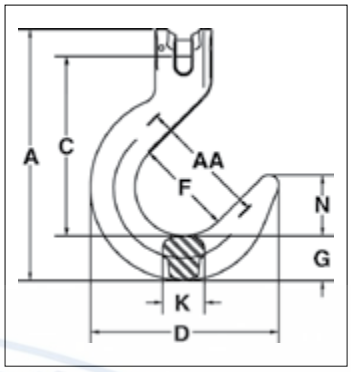

A-1359 Clevis Foundry Hook

Chain Size (in)	Chain Size (mm)	Stock No.	Working Load Limit at Saddle of Hook (t)	Working Load Limit at Tip of Hook (t)	Weight Each (kg)	Dimensions (mm) A	C	D	F	G	K	N	Deformation Indicators AA
1/4	7	1049907	2.0	1.0	0.98	159.0	111.3	122.4	63.5	28.7	22.4	39.9	88.9
5/16	8	1049911	2.6	1.3	0.93	159.0	111.0	122.4	63.5	28.7	22.4	39.9	88.9
3/8	10	1049916	4.0	2.0	1.95	197.1	140.7	147.8	76.2	35.1	33.0	47.8	101.6
1/2	13	1049925	6.8	3.4	3.62	238.3	169.4	178.8	88.9	41.4	38.1	57.2	114.3
5/8	16	1049934	10.3	5.1	6.44	285.8	195.1	207.5	101.6	55.6	44.5	64.3	127.0
3/4	18-20	1049943	16.0	8.0	11.2	366.5	248.7	245.1	127.0	61.0	55.9	86.1	152.4
7/8	22-23	1049952	21.0	10.0	19.9	412.8	279.9	280.2	139.7	78.0	69.1	95.0	165.1

4:1 Design Factor.

A-1329

- Forged alloy steel — Quenched & Tempered.
- Individually Proof Tested to 2-1/2 times the Working Load Limit with certification.
- Each hook has a Product Identification Code (PIC) for material traceability, along with the size and the name Crosby.
- Suitable for use with Grade 100 and Grade 80 chain.
- Fatigue rated to 20,000 cycles at 1-1/2 times the Working Load Limit.
- Hook can be tip loaded at the reduced Working Load Limit, see below.
- Operator must ensure the load is retained properly in the hook.

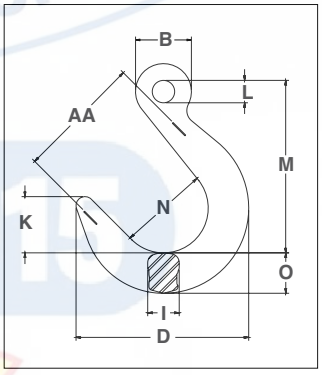

A-1329 Eye Foundry Hook

Chain Size (in)	Chain Size (mm)	Stock No.	Working Load Limit at Saddle of Hook (t)	Working Load Limit at Tip of Hook (t)	Weight Each (kg)	Dimensions (mm) B	D	I	K	L	M	N	O	Deformation Indicators AA
1/4 - 5/16	7-8	1026280	2.6	1.3	.91	39.6	122.4	22.4	39.9	16.0	122.2	63.5	28.7	89
3/8	10	1026289	4.0	2.0	1.72	52.6	147.8	33.0	47.8	20.6	139.7	76.2	35.1	102
1/2	13	1026297	6.8	3.4	3.27	64.3	178.8	38.1	57.2	26.2	180.6	88.9	41.4	114
5/8	16	1026306	10.3	5.1	5.58	76.2	207.5	44.5	64.3	31.8	202.2	101.6	55.6	127
3/4	18-20	1026315	16.0	8.0	10.4	104.9	245.1	55.9	86.1	50.0	273.1	127.0	61.0	165
7/8	22-23	1026324	21.0	10.0	18.4	121.2	280.2	69.1	95.0	57.9	311.2	139.7	78.0	178
1	26	1026333	27.1	13.5	23.5	135.4	302.3	71.9	99.8	65.0	339.6	152.4	84.1	191
1 1/4	32	1026342	41.0	20.5	38.3	167.9	336.6	88.9	110.0	80.0	387.4	165.1	97.5	203

4:1 Design Factor.

Copyright © 2023 The Crosby Group LLC All Rights Reserved

Crosby

A-1328

- Forged alloy steel — Quenched & Tempered.
- Individually Proof Tested to 2-1/2 times the Working Load Limit with certification.
- Each hook has a Product Identification Code (PIC) for material traceability, along with the size and the name Crosby.
- Suitable for use with Grade 100 and Grade 80 chain.
- Fatigue rated at 1-1/2 times the Working Load Limit at 20,000 cycles.

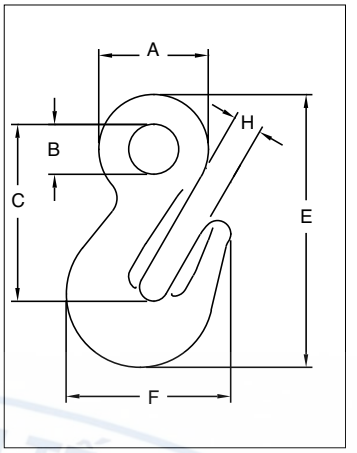

Crosby 8/10™ Fatigue Rated QUIC-CHECK® QT

A-1328 Eye Grab Hook

Chain Size (in)	Chain Size (mm)	Working Load Limit (t)	Stock No.	Weight Each (kg)	Dimensions (mm) A	B	C	E	F	H
1/4 - 5/16	7 - 8	2.6	1026169	.44	44.5	19.1	70.9	109	66.3	11.2
3/8	10	4	1026187	.73	52.3	23.9	84.6	130	78.5	13.5
1/2	13	6.8	1026196	1.50	65.0	28.4	104	162	97.3	16.8
5/8	16	10.3	1026205	2.72	78.0	33.3	125	194	115	20.0
3/4	19-20	16	1026214	4.54	82.6	38.1	137	223	152	23.9
7/8	22-23	20	1026223	5.94	100	46.0	165	257	166	27.7
1	26	27.1	1026232	8.57	113	50.8	183	291	197	30.2
1 1/4	32	41	1026241	17.9	143	60.5	231	371	241	38.1

4:1 Design Factor.

A-1348

- Forged alloy steel — Quenched & Tempered.
- The use of A-1348 Cradle Grab Hook will allow 100% percent of the chain sling capacity. When used to hook back to chain leg to form a choker, the angle of the choke must be 120 degrees or greater. When used as a chain shortener, minimize twist of chain and ensure chain is fully engaged in hook.
- Innovative cradle design allows for 100% efficiency of Grade 100 chain.
- Individually Proof Tested to 2-1/2 times the Working Load Limit with certification.
- Each hook has a Product Identification Code (PIC) for material traceability, along with the size and the name Crosby in raised letters.
- Suitable for use with Grade 100 and Grade 80 chain.
- Fatigue rated to 20,000 cycles at 1-1/2 times the Working Load Limit.

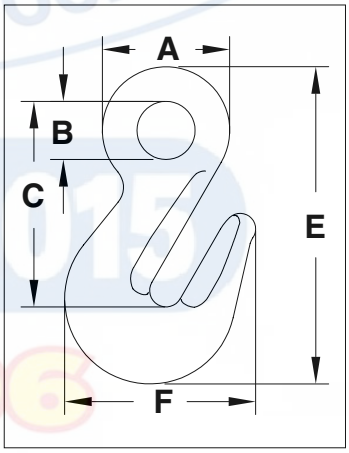

Crosby 8/10™ QT

A-1348 Eye Cradle Grab Hook

Chain Size (in)	Chain Size (mm)	Working Load Limit (t)	Stock No.	Weight Each (kg)	Dimensions (mm) A	B	C	E	F
1/4-5/16	7-8	2.5	1026200	0.35	36.3	16.5	64.0	98.2	58.2
3/8	10	4.0	1026209	0.64	49.5	26.0	78.0	120	68.8
1/2	13	6.8	1026218	0.87	62.0	29.0	97.0	146	82.4
5/8	16	10.3	1026227	2.83	79.0	36.0	126.5	196	111.8

4:1 Design Factor.

Copyright © 2023 The Crosby Group LLC All Rights Reserved

- Latch Kits shipped unassembled and individually packaged with instructions.
- For use only with Crosby L-1338 and L-1358 Grab Hooks.

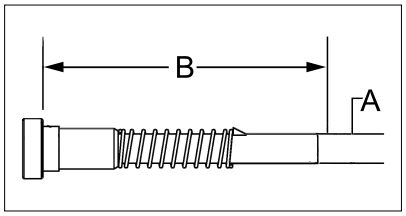

S-4338 Grab Hook Latch Kits

APPLICATION AND WARNING INFORMATION
SECTION 17

Hook Size (in)	Hook Size (mm)	Stock No.	Weight Each (kg)	Dimensions (mm) A	Dimensions (mm) B
1/4 5/16	7 8	1048426	.01	4.7	40.4
3/8	10	1048435	.01	4.7	45.2
1/2	13	1048444	.02	6.3	57.2
5/8	16	1048453	.03	7.9	65.2

S-1317

- Forged alloy steel — Quenched & Tempered.
- Individually Proof Tested to 2-1/2 times the Working Load Limit with certification.
- Recessed trigger design is flush with the hook body, protecting the trigger from potential damage.
  - Easy to operate with enlarged thumb access.
- Positive Lock Latch is self-locking when hook is loaded.
- Eye style is designed with engineered flat to connect to S-1325 chain coupler.
- Suitable for use with Grade 100 and Grade 80 chain.
- The SHUR-LOC® hook, if properly installed and locked, can be used for personnel lifting applications and meets the intent of OSHA Rule 1926.1431(g)(1)(i)(A) and 1926.1501(g)(4)(iv)(B).
- Fatigue rated to 20,000 cycles at 1-1/2 times the Working Load Limit.

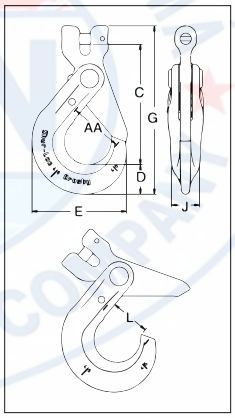

Crosby 8/10™ Fatigue Rated QUIC-CHECK® Q&T

APPLICATION AND WARNING INFORMATION
SECTION 17

S-1317 Clevis Hook

Chain Size (in)	Chain Size (mm)	Working Load Limit (t)	Stock No.	Weight Each (kg)	Dimensions (mm) C	D	E	G	J	L	AA
-	6	1.5	1028991	.35	87.4	20.1	66.0	121	16.0	29.0	38.1
1/4	7	2.0	1029000	.82	114	27.9	89.0	159	20.6	35.1	51.0
5/16	8	2.6	1029009	.82	114	27.9	89.0	159	20.6	35.1	51.0
3/8	10	4.0	1029018	1.66	140	29.7	112	192	24.1	46.5	63.5
1/2	13	6.8	1029027	3.08	173	42.4	139	242	29.5	56.4	76.2
5/8	16	10.3	1029036	5.40	209	51.8	167	295	38.1	67.3	89.0
3/4	18-20	16.0	1029071	6.80	239	56.4	197	336	51.6	89.4	-
7/8	22	20.0	1029080	12.7	283	62.2	222	392	55.9	97.3	-
1	26	27.1	1029089	22.5	319	81.5	251	468	68.1	104	-

4:1 Design Factor.

Copyright © 2023 The Crosby Group LLC All Rights Reserved

Crosby

S-1325A

- Forged alloy steel — Quenched & Tempered.
- Designed to connect Grade 100 chain fittings produced with engineered flat to Grade 100 chain.
- Suitable for use with Grade 100 and Grade 80 chain.
- Individually Proof Tested to 2-1/2 times the Working Load Limit with certification.
- Locking system that provides for simple assembly and disassembly – no special tools required.
- Fatigue rated to 20,000 cycles at 1-1/2 times the Working Load Limit.

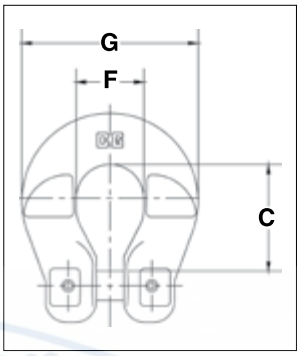

Crosby 8/10™ Fatigue Rated® Q&T

S-1325A Grade 100 Chain Coupler

Chain Size (in)	Chain Size (mm)	Stock No.	Working Load Limit (t)	Weight Each (kg)	Dimensions (mm) C	F	G
-	6	1098496	1.5	.11	26.2	19.3	44.7
1/4	7	1098500	2	.23	35.8	22.4	59.0
5/16	8	1098504	2.5	.23	35.6	22.4	59.0
3/8	10	1098508	4	.34	46.7	30.0	69.0
1/2	13	1098512	6.8	.75	55.6	38.1	94.5
5/8	16	1098516	10.3	.86	71.4	49.8	112

4:1 Design Factor.

S-1311N

- Forged alloy steel - Quenched & Tempered.
- Individually Proof Tested to 2-1/2 times the Working Load Limit with certification.
- Suitable for use with Grade 100 and Grade 80 chain.
- Spring loaded chain locking system keeps chain in place under slack conditions.
- The use of S-1311N Chain Shortener will allow 100 percent of the chain sling capacity.
- Fatigue rated to 20,000 cycles at 1-1/2 times the Working Load Limit.

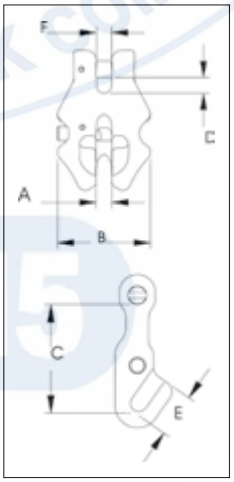

Crosby 8/10™ Fatigue Rated® Q&T

S-1311N Grade 100 Chain Shortener Link

Chain Size (in)	Chain Size (mm)	Stock No.	Working Load Limit (t)	Weight Each (kg)	Dimensions (mm) A	B	C	D	E	F
-	6	1017860	1.5	.34	7.61	44.7	46.5	7.37	19.3	7.37
1/4	7	1017869	2.0	.45	8.64	51.8	55.1	8.64	22.4	8.38
5/16	8	1017878	2.6	.45	10.2	59.9	64.3	9.91	25.7	9.65
3/8	10	1017897	4.0	.68	12.2	72.1	78.0	12.2	31.2	11.7
1/2	13	1017906	6.8	1.47	15.7	90.4	95.8	15.5	39.9	15.0
5/8	16	1017915	10.3	2.54	18.5	108	118	18.5	48.5	17.8

4:1 Design Factor.

Copyright © 2023 The Crosby Group LLC All Rights Reserved

A-1355

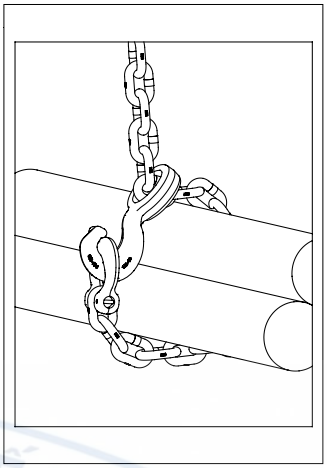

- Forged alloy steel - Quenched & Tempered.
- Individually Proof Tested with certification.
- Rated for Grade 100 chain in choker applications.
- Each hook has a Product Identification Code (PIC) for material traceability,
- along with the size and the name Crosby.
- Fatigue rated at 1-1/2 times the Working Load Limit at 20,000 cycles.
- For use with S-1325 Chain Coupler Link.

Crosby 8/10™ Fatigue Rated Q&T

A-1355 Chain Choker Hook

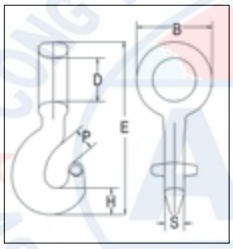

Grade 10 Alloy Chain Size		Working Load Limit		Weight Each	Dimensions (mm)					
(in)	(mm)	(t)	Stock No.	(kg)	B	D	E	H	P	S
1/4-5/16	7-8	2.6	1015204	.34	52.1	30.0	123	20.1	17.5	16.5
3/8	10	4.0	1015213	.74	67.6	39.9	154	23.6	23.6	17.5
1/2	13	6.8	1015222	1.42	85.1	51.6	193	30.0	32.0	23.8
5/8	16	10.3	1015231	3.16	107	64.0	246	39.1	28.4	30.0

4:1 Design Factor.

A-336

- Forged alloy steel - Quenched & Tempered.
- Individually Proof Tested at 2-1/2 times the Working Load Limit with certification.
- The Working Load Limit of the A-336 is less than Grade 80 chain ratings. When using in Grade 80 chain slings, ASME B30.9c requires that the Working Load Limit of a sling must not exceed the lowest Working Load Limit of the components in the system.

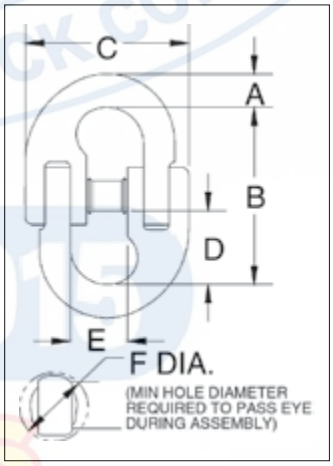

Q&T

APPLICATION AND WARNING INFORMATION
SECTION 17

A-336 LOK-A-LOY® 6 Connecting Link

Chain Size (mm)	Stock No.	Working Load Limit (t)	Weight Each (kg)	Dimensions (mm)					Diameter of Hole to Accept Link (mm)
				A	B	C	D	E	
6-7	1014397	1.47	.11	7.85	52.5	42.9	19.8	19.8	12.7
8-10	1014413	3.00	.27	11.4	69.0	58.5	26.9	27.7	16.8
13	1014431	5.10	.54	14.7	85.0	80.5	32.5	35.8	22.4
16	1014459	7.48	1.10	19.8	99.5	100	39.6	42.9	26.9
19	1014477	10.45	1.76	22.6	123	113	50.0	51.0	30.2
22	1014495	13.04	2.75	25.4	148	135	60.5	64.0	35.1
26	1014510	17.58	3.19	27.4	165	154	72.0	65.0	37.3
32	1014538	26.00	6.00	35.1	215	194	96.0	96.0	44.0

4:1 Design Factor.

Copyright © 2023 The Crosby Group LLC All Rights Reserved

Crosby

S-314A

- Forged alloy steel - Quenched & Tempered.
- Individually Proof Tested at 2-1/2 times the Working Load Limit with certification.
- Integrated heavy duty latch.
- Meets ASTM A-952 for Grade 80 chain fittings.
- Fatigue rated to 20,000 cycles at 1-1/2 times the Working Load Limit.

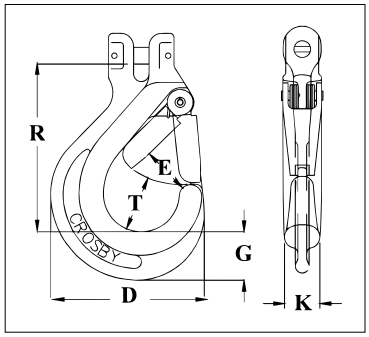

S-314A Clevis Chain Hook with Integrated Latch

Chain Size (in)	Chain Size (mm)	Stock No.	Grade 8 Alloy Chain Working Load Limit (t)	Weight Each (kg)	Dimensions (mm) D	E	G	K	R	T	Replacement Latch Stock No.
–	6	1225020	1.12	.32	66.0	20.6	20.0	16.0	72.3	26.0	1291332
1/4 - 5/16	7 - 8	1225021	2	.70	89.0	27.4	28.0	20.5	98.0	32.6	1291402
3/8	10	1225091	3.15	1.29	110.5	36.1	29.3	24.0	125.3	42.2	1291472
1/2	13	1225161	5.3	2.34	138.5	38.6	42.1	29.5	144.5	49.2	1291542
5/8	16	1225162	8	3.67	166.5	48.5	52.0	38.0	172.6	58.9	1291612

4:1 Design Factor.

S-315A

- Forged alloy steel - Quenched & Tempered.
- Individually Proof Tested at 2-1/2 times the Working Load Limit with certification.
- Crosby recommends grinding the WLL (which is 5:1 Design Factor) off the hook when using with Grade 80 chain.
- Integrated heavy duty latch.
- Engineered flat for use with S-1325A Coupler Link.
- Meets ASTM A-952 for Grade 80 chain fittings.
- Fatigue rated to 20,000 cycles at 1-1/2 times the Working Load Limit.

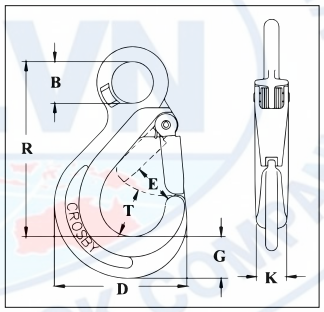

S-315A Eye Chain Hook with Integrated Latch

Chain Size (in)	Chain Size (mm)	Stock No.	Grade 8 Alloy Chain Working Load Limit (t)	Working Load Limit for Wire Rope (short Tons)	Weight Each (kg)	Dimensions (mm) B	D	E	G	K	R	T	Replacement Latch Stock No.
-	6	1029820	1.12	1	.25	20.1	66.0	20.6	20.1	16.0	84.5	25.9	1291332
1/4 - 5/16	7 - 8	1029825	2	2	.59	27.9	89.0	27.4	27.9	20.6	117	32.5	1291402
3/8	10	1029830	3.15	3	1.18	36.1	110	36.1	29.5	23.9	157	42.2	1291472
1/2	13	1029835	5.3	5	2.13	46.0	138	38.6	42.4	29.5	186	49.3	1291542
5/8	16	1029840	8	7	3.88	56.0	167	48.5	52.0	38.1	227	59.0	1291612

4:1 Design Factor for Grade 80 Alloy Chain, 5:1 Design Factor for wire rope.

G-334

- Forged steel - Quenched & Tempered.
- Has larger inside dimensions making it easier to attach hooks or other fittings to the chain.
- An exclusive Crosby product.
- After making connections, rivets must be peened.
- Not suitable for use with Grade 80 or Grade 100 chain and chain slings used in overhead lifting.

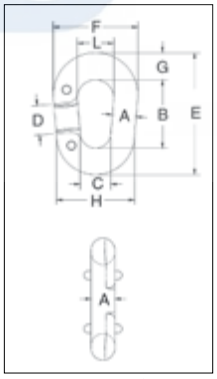

G-334 Pear Shape "Missing Link"® Replacement Links

Chain Size (mm)	Stock No.	Working Load Limit (t)	Weight Per 100 (kg)	Dimensions (mm) A	B	C	D	E	F	G	H	L
10	1013432	.84	11.3	10.4	51.0	14.2	20.6	74.5	41.4	11.9	35.1	20.6
13	1013450	1.50	22.7	12.7	63.5	17.5	25.4	92.0	51.0	14.2	42.9	25.4
16	1013478	2.27	34.0	16.0	70.0	20.6	26.9	102	60.5	16.0	52.5	28.7
19	1013496	3.22	56.7	19.1	79.5	25.4	28.7	121	70.0	20.6	63.5	31.8
22	1013511	4.35	90.7	22.4	93.5	31.8	35.1	141	82.5	23.9	76.0	38.1

4:1 Design Factor.

Copyright © 2023 The Crosby Group LLC All Rights Reserved

G-335

- Forged steel - Quenched & Tempered.
- Integral rivets join the two halves.
- After making connections, rivets must be peened.
- All sizes have countersunk rivet holes.
- Meets or exceeds the performance requirements of Federal Specifications RR-C-27IG, Type II, except for those provisions required of the contractor.
- Not suitable for use with Grade 80 or Grade 100 chain and chain slings used in overhead lifting.

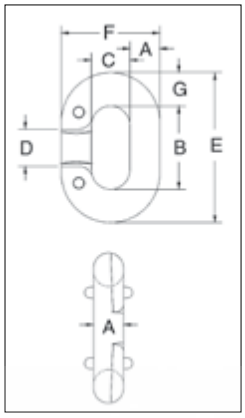

G-335 "Missing Link"® Replacement Links

Chain Size (in)	Stock No.	Working Load Limit (t)	Links Per Box	Weight Per 100 (kg)	Dimensions (mm) A	B	C	D	E	F	G
*7	1013110	.60	10	2.83	7.10	22.4	11.2	11.2	38.1	25.4	7.85
10	1013156	1.25	10	9.07	10.4	28.7	14.2	14.2	52.5	35.1	11.9
11	1013174	1.65	10	12.5	11.9	32.5	15.0	15.0	59.5	38.9	13.5
13	1013192	2.15	10	17.0	13.5	37.3	16.8	16.8	67.5	43.7	15.0
16	1013236	3.30	10	32.9	16.8	46.0	19.8	20.6	84.0	53.0	19.1
19	1013254	4.65	10	55.5	19.8	54.0	23.9	26.9	98.5	63.5	22.4
22	1013272	5.45	Bulk	79.5	23.1	63.5	28.7	28.7	114	74.5	25.4
† 26	1013290	7.00	Bulk	113	26.2	70.0	31.8	31.8	127	84.0	28.7

4:1 Design Factor. *Rivets Only - No interlocking lugs. †Has reinforced rivet holes.

SLING IDENTIFICATION TAG KITS

Stamped ID Tags

- Stamped ID Tags
- Octagonal metal sling tag.
- Pre-stamped - easy to add sling length, Working Load
- Limit, name, etc.
- Front side is shown - reverse is blank.
- Available with or without welded attached ring.
- Attaching ring size is 5mm x 50mm.
- Available completely blank for wire rope sling applications.
- Gold painted.

ID Tag Stock No.	Carton Qty.	Weight Per Carton (kg)
115244	50	10.55

ID Tags

- Heavy Duty tags.
- 33 mm diameter ring opening (will fit 6mm - 16mm A-1337).
- Chain tags meet requirements of ASME B30.9 for Sling Identification.
- Raised edge and recessed pads to protect lettering.
- Raised lettering for quick reference.

Operating Frequency: 13.5MHz

Stock No.	Style	Material Type	RFID Equipped	Tag Size (mm)	Weight Each (kg)
115369	Chain	Cast Stainless Steel	Yes	160 x 42	.21
115350	Wire Rope	Cast Stainless Steel	Yes	43 x 33.3	.03
115217	Chain	Forged Steel	No	146 x 48	.18
115353	Chain	Stamped Zinc Plated Steel	Yes	5-3/4 x 1-5/8	.29
115355	Wire Rope	Stamped Zinc Plated Steel	Yes	1-11/16 x 1-5/16	.04
1224692	Zip Tie	High Crystalline Polyamide	Yes	193.675	1.4

Copyright © 2023 The Crosby Group LLC All Rights Reserved

ALL RIGGING HARDWARE IS NOT EQUAL

The Crosby Group sets the standard for quality, training, and technical expertise in the field.

Crosby®

thecrosbygroup.com

#rigcrosby

WIRE ROPE END FITTINGS

A full line of forged fittings and accessories for wire rope applications.

ASEAN JSC.VN
ASEAN DEVELOPMENT JOINT STOCK COMPANY
ISO 9001:2015
Since 2006

the Crosby group®

thecrosbygroup.com

WIRE ROPE END FITTINGS

FORGED FOR CRITICAL APPLICATIONS

The proper performance of forged clips depends on proper manufacturing practices that include good forging techniques and accurate machining. Forged clips provide a greater rope bearing surface and more consistent strength than malleable cast iron clips. Fist Grip clips provide a saddle for both the "live" and the "dead" end. Fewer forged clips are required for each termination than with malleable cast iron clips. Forged clips reduce the possibility of hidden defects that are sometimes present in malleable cast iron clips. Malleable cast iron clips should only be used in non-critical applications. ASME, OSHA, and ASTM recommend only forged clips for critical applications.

Questions to ask your rigging provider

Is the clip forged?

Is an adequate cradle provided in the clip base for the wire rope?

Malleable cast iron clips are sometimes improperly used as replacements for forged clips.

Why choose Crosby

Crosby provides forged "Red" U-Bolt® Clips and forged Fist Grip clips which meet or exceed Federal Specification Number FF-C-450E and are considered the industry standard.

FULL LINE

The proper application of forged clips requires that the correct type, size, number, and installation instructions be used (See APPLICATION INFORMATION below for more information). Availability of a full range of sizes of forged U-bolt clips and forged Fist Grip clips are essential for design flexibility.

Questions to ask your rigging provider

Do they have both Fist Grip and U-bolt clips available?

Do they have a full range of forged wire rope clip sizes?

Malleable No competitor has the full line of forged U-Bolt clips and Fist Grip clips that Crosby has.

Why choose Crosby

Only Crosby provides forged "Red" U-Bolt® Clips from 3mm to 90mm and forged Fist Grip clips from 5mm to 140mm.

* The 3-1/2" base is a steel casting.

IDENTIFICATION

The clip's size, manufacturer's logo, and a traceability code should be clearly embossed in the forging of the clip. These three elements are essential in developing total confidence in the product.

Questions to ask your rigging provider

Is the manufacturer's name and size of clip clearly marked?

Do Do they have a traceability system that is actively used in the manufacturing process?

Most do not have a traceability system.

Why choose Crosby

Crosby clearly embosses its logo, the size, and the Product Identification Code (PIC) into all Crosby "Red" U-bolt® Clip bases and Fist Grip clips. Crosby's traceability system is actively used throughout the manufacturing of forged clips. The material analysis for each heat of steel is verified within our own laboratory.

APPLICATION INFORMATION

Detailed application information will assist you in the proper installation of wire rope clips. This information is most effective when provided at the point of application, as well as in supporting brochures and engineering information. The manufacturer must provide this specific information. Generic information will not provide all the needed application instructions. A formal application and warning system that attracts the attention of the user, clearly informs the user of the factors involved in the task, and informs the user with the proper application procedures as needed.

Questions to ask your rigging provider

Does each clip have the application and warning information?

Most competitors do not have application and warnings information with each clip.

Why choose Crosby

Crosby provides detailed application and warning information for all forged clips. Each clip is individually bagged or tagged with the application and warning information. Testing and evaluation of special applications can be performed upon special request.

Copyright © 2023 The Crosby Group LLC All Rights Reserved

CROSBY VALUE ADDED

- **Full line:** Crosby provides both forged Red U-Bolt Clips and forged Fist Grip Clips.
- **Forged:** Crosby Red U-Bolt Clips have forged bases on all sizes, except 70mm and 89mm base is a steel casting. The entire clip is galvanized to resist corrosive and rusting action. Clip sizes 3mm through 40mm have U-Bolts with rolled threads which enhance the strength of the material and fatigue properties.
- **Forged:** Fist Grip Clips are forged, and the entire clip is galvanized. The double saddle design eliminates the possibility of incorrect installation. Designed as an integral part of the clip, the bolts are opposite one another (see G-429 example below). As result, the nuts can be installed in such a way as to enable the operator to swing the wrench in a full arc for ease of installation.
- **Application information:** Application and warning information is available for both Crosby Red U-Bolt Clips and Fist Grip Clips. The Crosby Warning System is designed to attract the attention of the user, clearly inform the user of the factors involved in the task, and provide the user with proper application procedures. Each Crosby Red U-Bolt Clip and Fist Grip Clip is either bagged or tagged with appropriate application and warning information, thus ensuring that the information is available at the point of application for each and every clip during installation.
- **Material analysis:** Crosby can provide certified material (mill) analysis for each production lot, traceable by the Product Identification Code (PIC). Crosby, through its own laboratory, verifies the analysis of each heat of steel.
- **Testing:** Crosby periodically audits the termination efficiencies of the Red U-Bolt Clips and Fist Grip Clips. Upon special request, Crosby will determine the efficiencies of clip assemblies when applied to special rope constructions and special applications.

G-450

G-429

S-421T

S-423T

G-416

G-417

S-409

S-505

S-501

S-502

G-411

Copyright © 2023 The Crosby Group LLC All Rights Reserved

G-450
Red U-Bolt® Clip

- Each base has a Product Identification Code (PIC) for material traceability, the name Crosby or "CG," and a size forged into it.
- Based on the catalog breaking strength of wire rope, Crosby wire rope clips have an efficiency rating of 80% for 3mm through 22mm sizes, and 90% for sizes 24mm through 90mm.
- Entire clip is galvanized to resist corrosive and rusting action.
- Sizes 3mm through 62mm and 75mm have forged bases.
- All clips are individually bagged or tagged with proper application instructions and warning information.
- Clip sizes up through 38mm have rolled threads.
- Meets or exceeds all requirements of ASME B30.26 including identification, ductility, design factor, proof load and temperature requirements. Importantly, these wire rope clips meet other critical performance requirements, including fatigue life, impact properties, and material traceability not addressed by ASME B30.26.
- Look for the Red U-Bolt®, your assurance of genuine Crosby Clips.

APPLICATION AND WARNING INFORMATION
SECTION 17

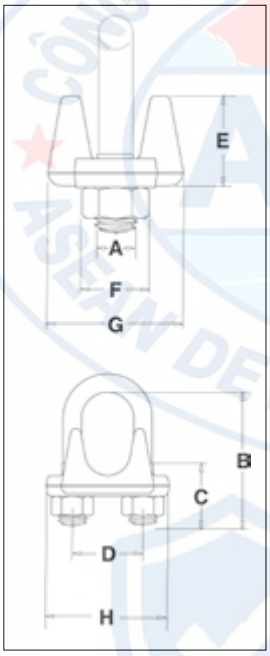

G-450 Crosby Clips

Rope Size (in)	Rope Size (mm)	Stock No.	Std. Package Qty.	Weight Per 100 (kg)	Dimensions (mm) A	B	C	D	E	F	G	H
1/8	3-4*	1010015	100	2.72	5.60	18.3	11.2	11.9	10.4	9.65	20.6	23.9
3/16*	5*	1010033	100	4.54	6.35	24.6	14.2	15.0	12.7	11.2	23.9	29.5
1/4	6-7	1010051	100	8.62	7.85	26.2	12.7	19.1	16.8	14.2	30.2	36.6
5/16	8	1010079	100	12.7	9.65	35.1	19.1	22.4	18.3	17.5	33.3	42.9
3/8	9-10	1010097	100	21.8	11.2	38.1	19.1	25.4	23.1	19.1	41.4	49.3
7/16 - 1/2	11-13	1010131	50	80	.50	1.88	1.00	1.19	1.13	.88	1.91	2.28
9/16 - 5/8	14-16	1010177	50	110	.56	2.25	1.25	1.31	1.34	.94	2.06	2.50
3/4	18-20	1010195	25	64	15.7	70.0	36.6	38.1	35.8	26.9	57.0	72.0
7/8	22	1010211	25	96	19.1	79.0	41.1	44.5	40.4	31.8	62.0	80.5
1	24-26	1010239	10	114	19.1	89.0	46.0	47.8	45.2	31.8	67.0	88.0
1-1/8	28-30	1010257	10	128	19.1	98.5	51.0	51.0	48.5	31.8	71.5	91.0
1-1/4	32-34	1010275	10	199	22.4	108	54.0	59.4	55.5	36.6	79.5	105
1-3/8	36	1010293	10	200	22.4	118	58.5	59.4	58.5	36.6	79.5	106
1-1/2	38	1010319	10	247	22.4	125	60.5	66.5	62.0	36.6	86.5	113
1-5/8	41-42	1010337	Bulk	319	25.4	135	66.5	70.0	67.5	41.4	92.0	121
1-3/4	44-46	1010355	Bulk	424	28.7	146	70.0	77.5	74.5	46.0	97.0	134
2	48-52	1010373	Bulk	590	31.8	164	76.0	86.0	77.0	51.0	113	149
2-1/4	56-58	1010391	Bulk	726	31.8	181	81.0	98.5	81.0	51.0	114	162
2-1/2	62-65	1010417	Bulk	862	31.8	195	87.5	105	93.5	51.0	119	168
** 2-3/4	** 68-72	1010435	Bulk	1043	31.8	211	90.5	111	124	51.0	127	175
3	75-78	1010453	Bulk	1406	38.1	233	98.5	121	119	60.5	149	194
** 3-1/2	** 85-90	1010426	Bulk	1814	38.1	273	114	140	152	60.5	157	213

*Electro-plated U-Bolt and Nuts. ** 70mm and 89mm base is made of cast steel.

Copyright © 2023 The Crosby Group LLC All Rights Reserved

G-429
Fist Grip® Clip
5mm - 16mm

- Entire clip is galvanized to resist corrosive and rusting action.
- Based on the catalog breaking strength of wire rope, Crosby wire rope clips have an efficiency rating of 80% for 5mm through 22mm sizes, and 90% for sizes 24mm through 40mm.
- Bolts are an integral part of the saddle. Nuts can be installed in such a way as to enable the operator to swing the wrench in a full arc for fast installation.
- All sizes have forged steel saddles.
- All Clips are individually bagged or tagged with proper application instructions and warning information.
- Meets or exceeds all requirements of ASME B30.26 including identification, ductility, design factor, proof load and temperature requirements. Importantly, these wire rope clips meet other critical performance requirements, including fatigue life, impact properties, and material traceability not addressed by ASME B30.26.
- Assembled with standard heavy hex nuts.

G-429
Fist Grip®,Clip
19mm - 38mm

5mm - 16mm

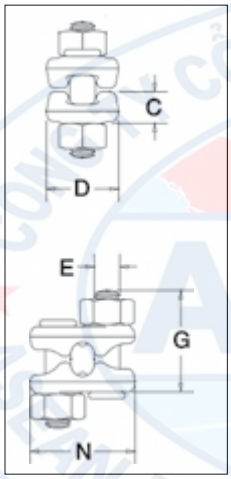

19mm - 38mm

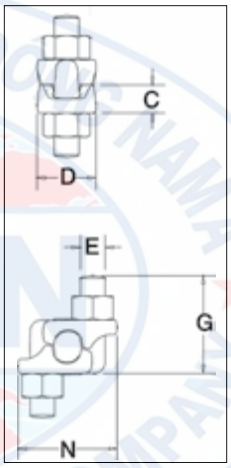

G-429 Fist Grip® Clips

Rope Size (in)*	Rope Size (mm)	Stock No.	Std. Package Qty.	Weight Per 100 (kg)	Dimensions (mm) C	D	E	G	N
3/16 - 1/4	5-7	1010471	100	10.4	10.2	23.9	9.65	32.5	36.6
5/16	8	1010499	100	12.7	11.9	26.9	9.65	37.3	39.1
3/8	10	1010514	50	18.1	13.0	26.9	11.2	46.0	45.2
7/16 - 1/2	11-13	1010532	50	28.1	15.0	31.8	12.7	55.5	54.6
9/16 - 5/8	14-16	1010550	50	46.7	18.3	38.1	16.0	68.5	65.3
3/4	18-20	1010578	25	79.0	21.8	46.0	19.1	74.5	67.8
7/8	22	1010596	25	102	24.6	53.8	19.1	84.0	72.6
1	24-26	1010612	10	136	28.7	57.0	19.1	94.5	77.7
1-1/8	28-30	1010630	10	181	32.5	60.5	22.4	107	87.4
1-1/4	32-34	1010658	10	181	34.0	63.5	22.4	108	90.4
1-3/8 - 1-1/2	36-40	1010676	Bulk	318	39.6	76.0	25.4	141	105

* Sizes through 16mm incorporate new style design.

APPLICATION AND WARNING INFORMATION
SECTION 17

G-460
Soft Eye
Bundle Clip
(For use without Thimble)

G-461
Thimble
Eye Bundle Clip

- Forged bases and bundle clip adapters.
- All bundle clips are individually bagged or tagged with proper application instructions and warning information.
- Bundle Clip Adapter for Soft Eye (G4460) and for Thimble Eye (G4461) kits available.
- Meets or exceeds all requirements of ASME B30.26 including manufacturing ID and size requirements. Importantly, these wire rope bundle clips meet material traceability not addressed by ASME B30.26.

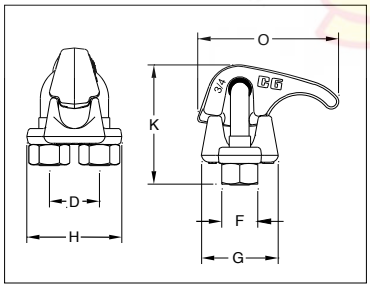

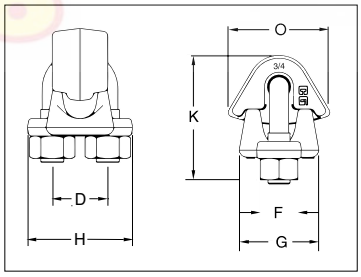

G-460 Soft Eye / G-461 Thimble Eye Bundle Clip

Rope Size (in)	Rope Size (mm)	Bundle Clip Style	Stock No.	Dimensions (mm) D	F	G	H	K	O	Weight each (kg)
3/4	18-20	G460	1010509	38.1	26.9	57.2	72.1	88.9	105	1.1
3/4	18-20	G461	1010619	38.1	26.9	57.2	72.1	88.9	72.4	1.1

Copyright © 2023 The Crosby Group LLC All Rights Reserved

Crosby

S-421T

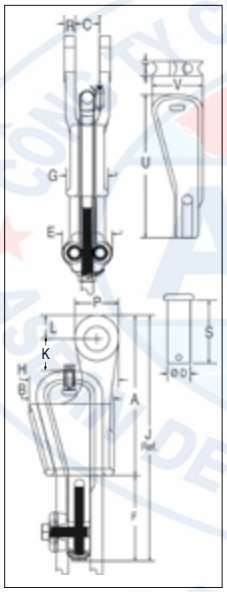

- Wedge socket terminations have an efficiency rating of 80% based on the catalog strength of XXIP wire rope.
- Meets or exceeds all requirements of ASME B30.26, including identification, ductility, design factor, proof load, and temperature requirements. Importantly, these sockets meet other critical performance requirements, including fatigue life, impact properties and material traceability, not addressed by ASME B30.26.
- Type Approval certification in accordance with ABS rules for conditions of classification, Part 1 2017 Steel Vessels and ABS guide for certification of lifting appliances 2017 available. Certificates available when requested at time of order and may include additional charges.
- Basket is cast steel and individually magnetic particle inspected.
- Pin diameter and jaw opening allows wedge and socket to be used in conjunction with closed swage and spelter sockets.
- Secures the tail or dead end of the wire rope to the wedge, thus eliminates loss or punch out of the wedge.
- Eliminates the need for an extra piece of rope and is easily installed.
- The Terminator wedge eliminates the potential breaking off of the tail due to fatigue.
- The tail, which is secured by the base of the clip and the wedge, is left undeformed.
- Incorporates Crosby's patented QUIC-CHECK® 'Go' and 'No-Go' feature cast into the wedge. The proper size rope is determined when the following criteria are met:
  - 1) The wire rope should pass through the 'Go' hole in the wedge.
  - 2) The wire rope should NOT pass through the 'No-Go' hole in the wedge.
- Utilizes standard Crosby Red U-Bolt® wire rope clip.
- The 9mm through 28mm standard S-421 wedge socket can be retrofitted with the new style Terminator wedge.
- Available with bolt, nut, and cotter pin: S-421TB.
- US patent 5,553,360, Canada patent 2,217,004, and foreign equivalents.
- Meets the performance requirements of EN 13411-6.
- Available with API-2C certification upon request.
- Wedge sockets meet the performance requirements of Federal specification RR-S-550F, Type C, except those provisions required of the contractor.
- The S-423T Super Terminator wedge is designed to be assembled only into the Crosby S-421T Terminator socket body. Important: The S-423TW for sizes 14mm through 28mm (5/8" through 1-1/8") will fit respective size standard Crosby S-421T basket. The 30-32mm (1-1/4") S-423TW will only fit the Crosby S-421T 1-1/4" basket marked with Terminator.

APPLICATION AND WARNING INFORMATION
SECTION 17

S-421T WEDGE SOCKETS (Assembly includes socket, wedge, pin and wire rope clip)

Wire Rope Dia. (in)	Wire Rope Dia. (mm)	Stock No.	Weight Each (kg)	Wedge Only	Weight Each (lb)	Standard Bolt, Nut & Cotter Assy	Weight Each (kg)
3/8	9-10	1035000	1.44	1035555	.23	2038971	.38
1/2	11-13	1035009	2.79	1035564	.48	2038972	.69
5/8	14-16	1035018	4.40	1035573	.81	2038974	1.15
3/4	18-19	1035027	6.58	1035582	1.18	2038976	1.91
7/8	20-22	1035036	9.75	1035591	1.82	2038978	3.23
1	24-26	1035045	13.9	1035600	2.44	2038980	5.40
1-1/8	28	1035054	20.5	1035609	3.56	2038982	7.50
1-1/4	30-32	1035063	29.4	1035618	4.80	2038984	10.34

Wire Rope Dia. (in)	Wire Rope Dia. (mm)	S-421T Stock No.	S-421TB Stock No.	Dimensions (mm) A	B	C +/- 2.29	D	G	H	J*	K*	L	P	R	S	T	U	V
3/8	9-10	1035000	1035203	145	69.1	20.6	20.6	35.1	77.7	198	47.8	22.4	39.6	11.2	54.1	11.2	31.8	35.1
1/2	11-13	1035009	1035212	175	88.1	25.4	25.4	41.1	95.5	226	32.0	26.9	49.3	12.7	65.0	13.5	44.5	47.8
5/8	14-16	1035018	1035221	210	109	31.8	30.2	53.8	114	273	50.5	31.0	57.2	14.2	82.6	17.5	51.0	55.5
3/4	18-19	1035027	1035230	251	130	38.1	35.1	62.0	134	314	61.2	35.6	66.8	16.8	92.2	19.8	59.5	65.0
7/8	20-22	1035036	1035249	286	149	44.5	41.4	68.5	156	365	63.0	42.4	79.5	19.1	109	22.4	68.5	74.5
1	24-26	1035045	1035258	325	161	51.0	51.0	74.7	177	414	77.2	51.0	95.5	22.4	119	26.2	73.0	83.5
1-1/8	28	1035054	1035267	365	176	57.0	57.0	84.0	194	466	65.0	57.0	108	25.4	138	27.9	82.6	90.5
1-1/4	30-32	1035063	1035276	415	222	66.5	63.5	90.5	239	520	74.7	59.5	114	26.9	156	30.2	117	125

* Nominal **note:** For intermediate wire rope sizes, use next larger size socket.

Copyright © 2023 The Crosby Group LLC All Rights Reserved

US-422T

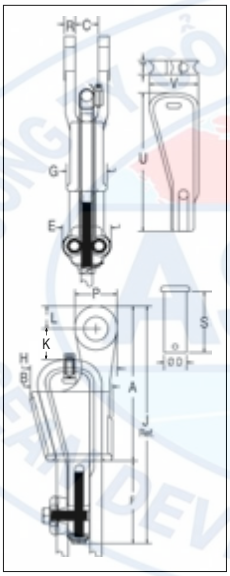

- Wedge socket terminations have an efficiency rating of 80% based on the catalog strength of XXIP wire rope.
- Meets or exceeds all requirements of ASME B30.26, including identification, ductility, design factor, proof load, and temperature requirements. Importantly, these sockets meet other critical performance requirements, including fatigue life, impact properties, and material traceability not addressed by ASME B30.26.
- Basket is cast steel and individually magnetic particle inspected.
- Wedges are color coded for easy identification.
  - Blue - largest wire line size for socket.
  - Black - mid size wire line for socket.
  - 11mm on US4
  - 14mm on US5
  - Orange - smallest wire line size for socket.
- By simply changing out the wedge, each socket can be utilized for various wire line sizes (ensure correct wedge is used for wire rope size).
- Cast into each wedge is the model number of the socket and the wire line size for which the wedge is to be used.
- Load pin is forged and headed on one end.
- US-422T wedge sockets contain a hammer pad (lip) to assist in proper securement of termination.
- Incorporates Crosby's patented QUIC-CHECK® 'Go' and 'No-Go' feature cast into the wedge. The proper size rope is determined when the following criteria are met:
- 1) The wire rope should pass through the 'Go' hole in the wedge.
- 2) The wire rope should NOT pass through the 'No-Go' hole in the wedge.
- Available with API-2C certification upon request.
- UWO-422T Wedges are to be used only with the US-422T Wedge Socket Assemblies.

APPLICATION AND WARNING INFORMATION
SECTION 17

US-422T Utility Wedge Sockets

Model No.	Wire Rope Size (in)	Wire Rope Size (mm)	Stock No.	Weight Each (kg)	Wedge Only Stock No.	Wedge Only Weight Each (kg)	Dimensions (mm) A	B	C +/- 2.29	D	G	H	J	K	L	P	R	S	T	U	V
US4T	3/8	10	1044300	2.09	1047310	0.32	173	90.2	25.4	25.4	41.4	71.4	214	35.1	26.9	49.3	12.7	64.3	11.2	48.5	54.4
US4T	7/16	11	1044309	2.09	1047301	0.46	173	90.2	25.4	25.4	41.4	71.4	222	27.4	26.9	49.3	12.7	64.3	13.5	44.7	47.8
US4T	1/2	13	1044318	2.09	1047329	0.46	173	90.2	25.4	25.4	41.4	71.4	222	25.9	26.9	49.3	12.7	64.3	13.5	44.7	47.8
US5T	1/2	13	1044327	3.86	1047338	0.91	233	107	35.8	31.8	54.1	84.1	284	46.7	38.1	76.2	16.0	82.6	19.1	48.8	54.9
US5T	9/16	14	1044336	3.86	1047347	0.82	233	107	35.8	31.8	54.1	84.1	291	61.0	38.1	76.2	16.0	82.6	17.5	50.8	55.4
US5T	5/8	16	1044345	3.86	1047356	0.82	233	107	35.8	31.8	54.1	84.1	291	59.4	38.1	76.2	16.0	82.6	17.5	50.8	55.4
US6T	5/8	16	1044354	4.26	1047365	1.37	240	119	38.1	31.8	56.9	92.2	303	63.0	38.1	76.2	14.2	82.6	22.4	60.5	69.9
US6T	3/4	19	1044363	4.26	1047374	1.14	240	119	38.1	31.8	56.9	92.2	300	51.6	38.1	76.2	14.2	82.6	22.4	54.1	66.8
US8AT	5/8	16	1044372	9.0	1047383	1.46	269	144	46.0	41.4	60.5	140	335	48.5	38.9	73.2	19.1	105	17.5	82.8	88.9
US8AT	3/4	19	1044381	9.3	1047392	1.55	269	144	46.0	41.4	60.5	148	344	60.5	38.9	73.2	19.1	105	19.8	79.2	85.9
US7*	7/8	22	1038580	7.48	1046674	1.18	286	130	33.3	31.8	68.3	—	—	65.0	41.4	82.8	16.8	82.6	26.9	53.8	65.0
US7*	1	25	1038589	7.48	1046683	1.18	286	130	33.3	31.8	68.3	—	—	65.0	41.4	82.8	16.8	82.6	26.9	47.8	60.5
US8T	7/8	22	1044404	14.3	1047425	2.50	324	177	46.0	41.4	77.7	183	407	72.9	41.9	79.2	19.1	105	22.4	98.6	106
US8T	1	25	1044417	14.7	1047431	2.77	324	177	46.0	41.4	77.7	186	417	58.9	41.9	79.2	19.1	105	26.2	95.5	103
US10T	1-1/8	28	1044426	25.1	1047440	4.40	405	219	46.0	41.4	90.7	232	501	82.8	55.6	111	19.1	105	27.7	121	129
US10T	1-1/4	32	1044435	26.3	1047459	4.72	405	219	46.0	41.4	90.7	239	514	71.9	55.6	111	19.1	105	30.2	117	125
US11T	1-1/8	28	1044444	27.5	1047468	5.7	415	222	66.5	63.5	90.4	232	507	85.6	59.4	114	26.9	156	27.7	121	129
US11T	1-1/4	32	1044453	29.4	1047477	6.8	415	222	66.5	63.5	90.4	239	520	74.7	59.4	114	26.9	156	30.2	117	125

* Non-Terminator Style.

Copyright © 2023 The Crosby Group LLC All Rights Reserved

Crosby

S-423T

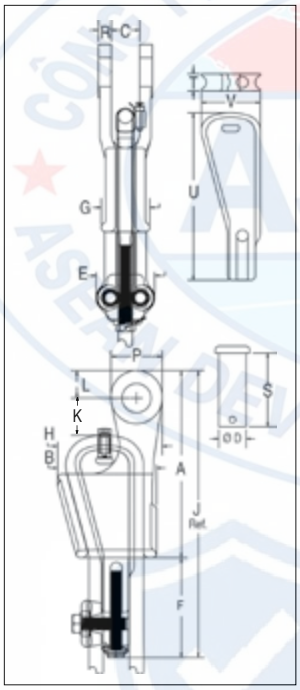

- The 423T wedge socket terminations have a minimum efficiency rating on most high-performance, high-strength, compacted-strand, rotation-resistant wire ropes of 80% based on the catalog breaking strength of the various ropes.
- Design eliminates the difficulty of properly seating the wedge with high performance wire rope into a wedge socket termination.
- Proper application of the Super Terminator eliminates the 'first load' requirement of conventional wedge socket terminations.
- S-423TW Wedge Kit can be retrofitted onto existing Crosby S-421T Terminator Wedge Sockets.
- Wedge and accessories provided with a zinc finish.
- Meets the performance requirements of EN13411-6.
- Meets or exceeds all requirements of ASME B30.26, including identification, ductility, design factor, proof load, and temperature requirements. Importantly, these sockets meet other critical performance requirements, including fatigue life, impact properties, and material traceability not addressed by ASME B30.26.
- Basket is cast steel and individually magnetic particle inspected.
- Pin diameter and jaw opening allows wedge and socket to be used in conjunction with closed swage and spelter sockets.
- Secures the tail or dead end of the wire rope to the wedge, thus eliminates loss or punch out of the wedge.
- Eliminates the need for an extra piece of rope, and is easily installed.
- The Terminator wedge eliminates the potential breaking off of the tail due to fatigue.
- The tail, which is secured by the base of the clip and the tension device, is left undeformed.
- Available with bolt, nut, and cotter pin: S-423TB.
- Available with API-2C certification upon request.
- Wedge sockets meet the performance requirements of Federal Specification RR-S-550F, Type C, except those provisions required of the contractor.
- The S-423T Super Terminator wedge is designed to be assembled only into the Crosby S-421T Terminator socket body. Important: The S-423TW for sizes 14mm through 28mm will fit respective size standard Crosby S-421T basket. The 30-32mm S-423TW will only fit the Crosby S-421T 30-32mm basket marked with Terminator.

Assembly includes socket, wedge, pin, wire rope clip, tensioner, bolts and secondary retention wire.

APPLICATION AND WARNING INFORMATION
SECTION 17

S-423T WEDGE SOCKETS

Wire Rope Dia.		S-423T Assembly with Round Pin and Cotter Pin			S-423TB Assembly with Bolt, Nut and Cotter Pin			S-423TW** Wedge Kit		
			S-423T Weight Each			S-423TB Weight Each			S-423TW Weight Each	
(in)	(mm)	S-423T Stock No.	(lb)	(kg)	S-423TB Stock No.	(lb)	(kg)	S-423TW Stock No.	(lb)	(kg)
5/8	14- 16	1035123	12.7	5.8	1035218	13.1	5.9	1034018	5.2	2.4
3/4	18-19	1035132	19.4	8.8	1035227	19.1	8.7	1034027	7.2	3.3
7/8	20-22	1035141	28.8	13.1	1035236	27.8	12.6	1034036	10.3	4.7
1	24-26	1035150	39.2	17.8	1035245	37.3	16.9	1034045	11.9	5.4
1-1/8	28	1035169	57.1	25.9	1035254	57.9	25.9	1034054	19.9	9.0
1-1/4	30-32	1035178	88.6	40.2	1035272	88.1	39.9	1034063	33.8	15.3

**Kit contains wedge, wire rope clip and bolts, tensioner bolt, and secondary retention wire.

Wire Rope Dia.		S-423T Stock No.	Dimensions (mm)																
(in)	(mm)		A	B	C	D	E	F	G	H	J*	K	L	P	R	S	T	U	V
5/8	14- 16	1035123	210	114	31.8	30.2	76.2	103	54.1	117	313	28.0	31.0	57.2	14.2	82.6	19.1	175	66.0
3/4	18-19	1035132	251	132	38.1	35.1	82.6	122	62.0	136	373	38.0	35.6	66.5	16.8	92.2	22.4	194	76.7
7/8	20-22	1035141	286	149	44.5	41.4	96.8	146	68.3	156	431	40.5	42.4	79.5	19.1	109	25.4	241	88.1
1	24-26	1035150	325	167	50.8	50.8	96.8	146	74.7	179	471	36.5	51.1	95.3	22.4	119	28.7	264	97.0
1-1/8	28	1035169	365	176	57.2	57.2	102	174	85.9	198	539	28.5	57.4	108	25.4	138	31.8	300	107
1-1/4	30-32	1035178	415	219	66.5	63.5	114	197	90.7	238	612	38.0	59.4	114	26.9	168	35.1	352	148

* Nominal note: For intermediate wire rope sizes, use next larger size socket.

Copyright © 2023 The Crosby Group LLC All Rights Reserved

Wire Rope Lubricant

Vitalife® products are the preferred wire rope lubricants in the industry because of their ability to penetrate into wire rope and displace water and contaminants, thus reducing wear and corrosion throughout the rope.

- Available in a variety of container sizes.
- Provides inner strand preservation and lubricity.
- Allows for easy visual inspection of the ropes.
- Reduces the friction between the strands of the wire rope, thus extending rope life.
- Adheres to surface of strands, forming an outer film which provides excellent corrosive protection.
- Non-tacky (will not attract dust)
- Vitalife® in aerosol form is a regulated dangerous good. See MSDS sheet for shipping instructions.
- Vitalife® Bio-Lube has been developed especially for environmentally friendly applications.
- Vitalife® 500 has been developed exclusively for ski lifts and tramways.

VITALIFE® 400
12 OZ.

VITALIFE® 410 BIO-LUBE
12 OZ.

VITALIFE® 400
5 GALLON

VITALIFE® 400
55 GALLON

Vitalife® Type	Container Size	Stock No.	Weight Each (kg)
Vitalife® 400 (Standard)	12 Ounce	1038946	1.00
	5 Gallon	1038955	41.0
	55 Gallon	1038964	420
Vitalife® 410 BIO-LUBE (Environmentally Friendly)	12 Ounce	1039004	1.00
	5 Gallon	1039013	41.0
	55 Gallon	1039022	420
Vitalife® 500 (Ski Lifts and Tramways)	5 Gallon	1038973	41.0
	55 Gallon	1038982	420

SPRAY APPLICATORS BACKPACK SPRAYER
4 GALLON

VSP Vitalife® Spray Applicators

- Designed and manufactured to work in the rugged field conditions of the construction industry.
- All applicator seals are specially designed to work with Vitalife® 400 and BIO-LUBE products.

Description	VSP Stock No.	Weight Each (kg)
15 Liter Backpack Sprayer	1039092	5.3

Copyright © 2023 The Crosby Group LLC All Rights Reserved

Crosby

SB-427

- Available in six sizes from 13mm - 38mm.
- Button Spelter terminations have a 100% efficiency rating, based on the catalog strength of the wire rope.
- Designed for use with mobile cranes. Can be used to terminate high performance, rotation resistant ropes, and standard 6 strand ropes.
- Easy to install assembly utilizes Crosby WIRELOCK® socketing compound.
- Sockets and buttons are re-usable.
- Replacement buttons and sockets are available.
- Locking feature available to prevent rotation of rope.
- Button contains cap with eye that can be attached to, and used to pull, rope during reeving process.
- Manufactured to the requirements of API-2C.

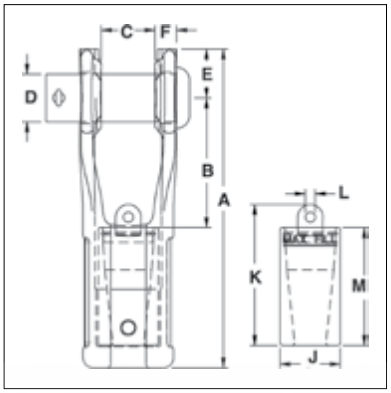

APPLICATION AND WARNING INFORMATION
SECTION 17

SB-427 Button Spelter Sockets

Wire Rope Size (in)	Wire Rope Size (mm)	Stock No.	Ultimate Load (t)	Weight Each (kg)	Button Only Stock No.	Dimensions (mm) A	B	C	D	E	F	J	K	L	M	Tolerance +/- (mm) C
1/2 - 5/8	13-16	1052005	27	2.76	1052309	202	82	33	30	31	14	38	89	6	74	1.52
5/8 - 3/4	16-19	1052014	45	4.67	1052318	240	99	39	35	37	17	44	109	10	87	1.52
3/4 - 7/8	19-22	1052023	57	7.75	1052327	275	112	45	41	43	19	52	121	10	101	1.52
7/8 - 1	22-26	1052032	82	13.24	1052336	327	139	52	51	51	23	62	143	16	115	2.29
1-1/8 - 1-1/4	28-32	1052041	136	20.86	1052345	378	144	64	57	64	28	75	180	19	145	2.29
1-3/8 - 1-1/2	35-38	1052050	161	35.38	1052354	459	182	77	70	70	31	92	205	19	172	2.29

SB-427TB (Bolt, Nut and Cotter Pin)

Wire Rope Size (in)	Wire Rope Size (mm)	Stock No.	Ultimate Load (t)	Weight Each (kg)	Button Only Stock No.	Dimensions (mm) A	B	C	D	E	F	J	K	L	M	Tolerance +/- (mm) C
1/2 - 5/8	13-16	1052406	27	2.76	1052309	202	82	33	30	31	14	38	89	6	74	1.52
5/8 - 3/4	16-19	1052415	45	4.67	1052318	240	99	39	35	37	17	44	109	10	87	1.52
3/4 - 7/8	19-22	1052424	57	7.75	1052327	275	112	45	41	43	19	52	121	10	101	1.52
7/8 - 1	22-26	1052433	82	13.24	1052336	327	139	52	51	51	23	62	143	16	115	2.29
1-1/8 - 1-1/4	28-32	1052442	136	20.86	1052345	378	144	64	57	64	28	75	180	19	145	2.29
1-3/8 - 1-1/2	35-38	1052451	161	35.38	1052354	459	182	77	70	70	31	92	205	19	172	2.29

Wirelock® Requirements

Wire Rope Size (in)	Wire Rope Size (mm)	WIRELOCK Required (cc)	WIRELOCK Stock No.	WIRELOCK Kit Size (cc)
1/2 - 5/8	13-16	35	1039602	100
5/8 - 3/4	16-19	60	1039602	100
3/4 - 7/8	19-22	100	1039602	100
7/8 - 1	22-26	140	1039602*	100
1-1/8 - 1-1/4	28-32	250	1039604	250
1-3/8 - 1-1/2	35-38	420	1039606	500

* 2 kits required.

Copyright © 2023 The Crosby Group LLC All Rights Reserved

G-416 / S-416

- Forged steel sockets through 38mm, cast alloy steel 40mm through 102mm.
- Spelter socket terminations have an efficiency rating of 100%, based on the catalog strength of wire rope.
- Ratings are based on recommended use with 6 x 7, 6 x 19 or 6 x 37, IPS or XIP (EIP), XXIP (EEIP), RRL, FC or IWRC wire rope.
- Strand constructed with minimal number of wires (e.g. 1 x 7) requires special consideration that socket basket length be five (5) times the strand diameter or fifty (50) times the wire diameter, whichever is the greater.
- All cast steel sockets 40mm and larger are magnetic particle inspected and ultrasonic inspected. Proof testing available on special order.
- Available with bolt nut and cotter: G-416B.
- Open Grooved Sockets meet the performance requirements of Federal Specification RR-S-550F, Type A, except for those provisions required of the contractor.

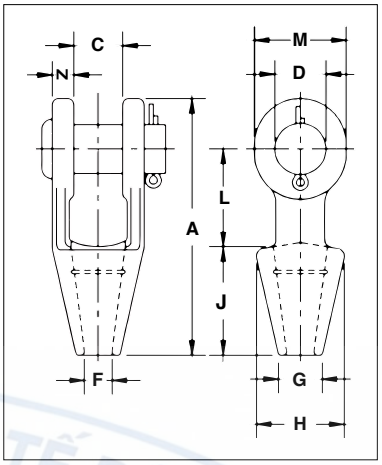

G-416 / S-416 Open Spelter Sockets

Rope Dia. (in)	Rope Dia. (mm)	Structural Strand Dia. (mm)	Ultimate Load (t)	Stock No. G-416 Galv.	Stock No. S-416 S.C.	Weight Each (kg)	Dimensions (mm) A	C	D	F	G	H	J	L	M	N	Tolerance +/- (mm) C
5/16-3/8	8-10	—	12	1039637	1039646	.59	123	20.6	20.6	12.7	20.6	42.9	57.0	44.5	38.1	11.2	1.52
7/16-1/2	11-13	—	20	1039655	1039664	1.02	141	25.4	25.4	14.2	23.9	47.8	63.5	51.0	47.8	12.7	1.52
9/16-5/8	14-16	12-13	27	1039673	1039682	1.63	171	31.8	30.2	17.5	28.7	57.0	76.0	63.5	57.0	14.2	1.52
3/4	18	14-16	43	1039691	1039708	2.64	202	38.1	35.1	20.6	31.8	66.5	89.0	76.0	66.5	15.7	1.52
7/8	20-22	18-19	55	1039717	1039726	4.38	235	44.5	41.4	23.9	38.1	82.5	102	89.0	79.5	20.3	1.52
1	24-26	20-22	78	1039735	1039744	7.03	268	51.0	51.0	28.7	44.5	95.5	114	102	95.5	22.4	1.52
1-1/8	28-30	24-26	92	1039753	1039762	9.75	300	57.0	57.0	31.8	51.0	105	127	117	105	25.4	3.05
1-1/4 - 1-3/8	32-35	28	136	1039771	1039780	14.1	335	63.5	63.5	38.1	57.0	121	140	127	121	28.7	3.05
1-1/2	38	30-32	170	1039799	1039806	21.4	384	76.0	70.0	41.4	70.0	133	152	152	137	30.2	3.05
* 1-5/8	* 40-42	33-35	188	1039815	1039824	24.9	413	76.0	76.0	44.5	76.0	140	165	165	146	33.3	3.05
* 1-3/4 - 1-7/8	* 44-48	36-40	268	1039833	1039842	37.2	464	89.0	89.0	51.0	79.5	162	191	178	165	39.6	3.05
* 2 - 2-1/8	* 50-54	42-45	291	1039851	1039860	59	546	102	95.5	57.0	95.5	187	216	229	178	46.0	3.05
* 2-1/4 - 2-3/8	* 56-60	46-48	360	1039879	1039888	76	597	114	108	63.5	102	210	229	254	197	54.0	3.05
* 2-1/2 - 2-5/8	* 64-67	50-54	424	1041633	1041642	114	648	127	121	73.0	114	235	248	274	216	60.5	3.05
* 2-3/4 - 2-7/8	* 70-73	56-62	511	1041651	1041660	143	692	133	127	79.0	124	267	279	279	229	73.0	6.35
* 3 - 3-1/8	* 75-80	64-67	563	1041679	1041688	172	737	146	133	86.0	133	282	305	287	241	76.0	6.35
* 3-1/4 - 3-3/8	* 82-86	70-73	722	1041697	1041704	197	784	159	140	92.0	146	302	330	300	254	79.0	6.35
* 3-1/2 - 3-5/8	* 88-92	76-80	779	1041713	1041722	255	845	171	152	98.5	165	314	356	318	274	82.5	6.35
* 3-3/4 - 4	* 94-102	—	875	1041731	1041740	355	921	191	178	108	184	346	381	343	318	89.0	6.35

* Cast alloy steel.

Copyright © 2023 The Crosby Group LLC All Rights Reserved

Crosby

G-417 / S-417

- Forged steel sockets through 38mm, cast alloy steel 40mm through 102mm.
- Spelter socket terminations have an efficiency rating of 100%, based on the catalog strength of wire rope.
- Ratings are based on recommended use with 6 x 7, 6 x 19 or 6 x 37, IPS or XIP (EIP), XXIP (EEIP), RRL, FC or IWRC wire rope.
- Strand constructed with minimal number of wires (e.g. 1 x 7) requires special consideration that socket basket length be five (5) times the strand diameter or fifty (50) times the wire diameter, whichever is the greater.
- All cast steel sockets 40mm and larger are magnetic particle inspected and ultrasonic inspected. Proof testing available on special order.
- Closed Grooved Sockets meet the performance requirements of Federal Specification RR-S-550F, Type B, except for those provisions required of the contractor.

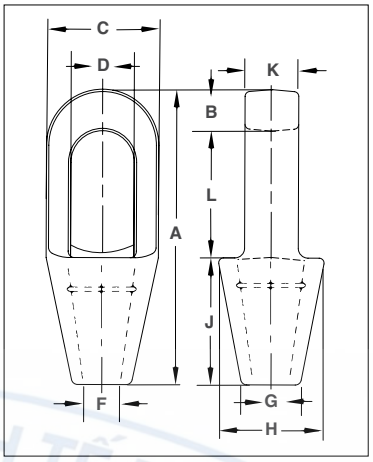

G-417 / S-417 Closed Spelter Sockets

Rope Dia. (in)	Rope Dia. (mm)	Structural Strand Dia. (mm)	Ultimate Load (t)	Stock No. G-417 Galv.	Stock No. S-417 S.C.	Weight Each (kg)	Dimensions (mm) A	B	C	D*	F	G	H	J	K	L
5/16 - 3/8	8-10	—	12.0	1039913	1039922	.34	125	15.8	42.9	24.6	12.7	20.6	42.9	57.2	17.5	52.3
7/16 - 1/2	11-13	—	20.0	1039931	1039940	.68	140	17.5	51.0	29.5	14.2	23.9	51.0	63.5	22.4	58.7
9/16 - 5/8	14-16	12-13	30.8	1039959	1039968	1.13	162	20.6	67.0	35.8	17.5	30.2	67.0	76.2	25.4	65.0
3/4	18	14-16	43.5	1039977	1039986	1.92	194	26.9	76.2	42.2	22.4	33.3	70.0	89.0	31.8	77.7
7/8	20-22	18-19	65.3	1039995	1040000	3.28	226	33.3	92.0	49.3	25.4	38.1	82.5	102	38.1	90.5
1	24-26	20-22	81.6	1040019	1040028	4.76	254	36.6	105	58.5	28.7	44.5	95.5	114	44.5	103
1-1/8	28-30	24-26	100	1040037	1040046	6.46	283	39.6	114	65.0	31.8	51.0	105	127	51.0	116
1-1/4 -1-3/8	32-35	28	136	1040055	1040064	8.95	309	41.4	127	71.0	38.1	58.5	119	138	56.5	129
1-1/2	38	30-32	170	1040073	1040082	13.24	355	49.3	137	81.0	41.4	70.5	132	151	62.5	155
† 1-5/8	† 40-42	33-35	188	1040091	1040108	16.32	390	54.0	146	82.5	44.5	76.2	140	165	70.0	171
† 1-3/4 - 1-7/8	† 44-48	36-40	268	1040117	1040126	25.96	445	55.5	171	95.5	51.0	79.5	162	191	76.2	198
† 2 - 2-1/8	† 50-54	42-45	309	1040135	1040144	35.83	505	62.0	194	111	57.2	95.5	187	216	82.5	224
† 2-1/4 - 2-3/8	† 56-60	46-48	360	1040153	1040162	47.62	546	70.0	216	127	66.8	105	210	229	92.0	248
† 2-1/2 - 2-5/8	† 64-67	50-54	424	1041759	1041768	63.50	597	79.5	241	140	74.5	114	235	248	102	270
† 2-3/4 - 2-7/8	† 70-73	56-62	549	1041777	1041786	99.79	645	79.5	273	159	79.5	124	259	279	124	286
† 3 - 3-1/8	† 75-80	64-67	656	1041795	1041802	125	689	85.6	292	171	86.0	133	292	305	133	298
† 3-1/4 - 3-3/8	† 82-86	70-73	750	1041811	1041820	142	743	102	311	184	92.0	146	311	330	146	311
† 3-1/2 - 3-5/8	† 88-92	76-80	820	1041839	1041848	181	787	102	330	197	98.5	160	330	356	159	330
† 3-3/4 - 4	† 94 - 102	—	1005	1041857	1041866	246	845	108	362	216	108	184	362	381	178	356

* Diameter of pin must not exceed pin used on companion 416 socket. Reference adjacent page "D" dimension. † Cast alloy steel.

Copyright © 2023 The Crosby Group LLC All Rights Reserved

RESIN FOR SPELTER SOCKETS

Note: For use on 416, 417, 427 and 517 spelter sockets only.

WIRELOCK®
Socketing Compound

- 100% termination efficiency.
- Temperature operating range is -54°C to +116°C (-65°F to +240°F).
- Ideal for on-site applications.
- No hazardous molten metal.
- Improved fatigue life.
- Pouring temperature without booster pack is 6.67°C to 43.3°C (48°F to 110°F).
- One booster pack if pouring temperature is 1.67°C to 8.89°C (35°F to 48°F).
- Two booster packs if pouring temperature is -2.78°C to +1.67°C (27°F to 35°F).
- Refer to Crosby® Wire Rope End Terminations Manual for more information.
- Storage temperature is 20°C (68°F) max. Store in well ventilated area away from sunlight and sources of ignition.

APPROVALS:

Lloyds Register of Shipping

Det Norske Veritas (DNV)

United States Coast Guard

Registro Italiano Navale

Germanischer Lloyd

United States Navy

American Bureau of Shipping

ISO 17.558

DNV-OS-E304

ABS

U.S. Department of Transportation
United States Coast Guard

NATO Numbers:

100cc	8030-21-902-1823
250cc	8030-21-902-1824
500cc	8030-21-902-1825
1000cc	8030-21-902-1826

Witnessed and tested by American Bureau of Shipping. (ABS)

Approximate U.S. Measurements:
250cc's Kit 1 Cup

WIRELOCK® W416-7 Socket Compound

W416-7 Kits				Booster Pak Stock No.
Kit Size	Kit Per Case	Stock No.	Weight Each (kg)	
100	20	1039602	.28	1039603
250	12	1039604	.57	1039605
500	12	1039606	1.15	1039607
1000	12	1039608	2.08	1039609
2000	6	1039610	4.08	1039611

Guide to amount WIRELOCK® Required

Wire Rope Size		WIRELOCK Required (cc)	Wire Rope Size		WIRELOCK Required (cc)
(in)	(mm)		(in)	(mm)	
1/4	6-7	9	1-3/4	44	700
5/16	8	17	1-7/8	48	700
3/8	9-10	17	2	51	1265
7/16	11	35	2-1/8	54	1265
1/2	13	35	2-1/4	56	1410
9/16	14	52	2-3/8	60	1410
5/8	16	52	2-1/2	64	1830
3/4	20	86	2-5/8	67	1830
7/8	22	125	2-3/4	70	2250
1	26	160	3	76	3160
1-1/8	28	210	3-1/4	82	3795
1-1/4	32	350	3-1/2	88	4920
1-3/8	36	350	3-3/4	94	5980
1-1/2	40	420	4	102	7730
1-5/8	42	495	—	—	—

Wirelock is a hazardous material regulated by US DOT, ICAO/IATA and IMO for transportation.

APPLICATION AND WARNING INFORMATION
SECTION 17

Copyright © 2023 The Crosby Group LLC All Rights Reserved

Crosby

S-505
Swaging Sleeve

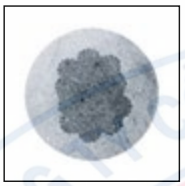

Cross Section of Swaged Sleeve

- For flemish eye wire rope splicing.
- Designed for low temperature toughness.
- Resists cracking when swaged (equals or exceeds stainless steel sleeves).
- Special processed low carbon steel.
- COLD TUFF® for better swageability.
- Can be stamped for identification after swaging without concern for fractures when following these directions:
  - Use round corner stamps to a maximum depth of 1.38mm.
  - The area for stamping should be on the side of the sleeve in the plane of the sling eye, and no less than 7mm from either end of the sleeve.
- Standard steel sleeve terminations have efficiency ratings as follows based on the catalog strength of wire rope.
- Do not use on wire rope size other than size shown.

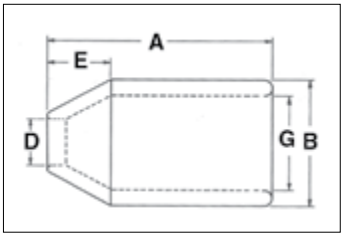

S-505 Termination Efficiency		
Size (mm)	Type of Wire Rope *	
	IWRC	FC
6 - 26	96%	93%
28 - 52	92%	89%
56 and Larger	90%	87%

Intermediate Metric Die Chart

Sleeve and Swaging Die Requirements for Intermediate Sizes of Metric Wire Rope							
			Standard Round Dies				
S-505 Stock No.	S-505 Sleeve Size	Metric Wire Rope Size (mm)	1st Stage Die		2nd Stage Die		Maximum After Swage Dimension (mm)
1041143	1/2	12	1190881	5 x 7 Double Cavity	—		25.1
1041223	7/8	20	1190901	5 x 7 Double Cavity	—		41.1
1041241	1	24	1190921	5 x 7 Double Cavity	—		47.8
1041321	1-1/2	36	1192649	5 x 7	1190941	5 x 7	66.8
1041349	1-3/4	40	1192685	5 x 7	1190961	5 x 7	74.9
1041367	2	48	1192729	5 x 7	1190971	5 x 7	87.9
1041401	2-1/2	60	1192809	5 x 7	1190981	5 x 7	111
1041401	2-1/2	60	1191061	6 x 12	1190991	6 x 12	111
1041447	3	72	1193201	6 x 12	1191001	6 x 12	122
1041483	3-1/2	80	1193247	6 x 12	1191101	6 x 12	138
1041483	3-1/2	84	1193247	6 x 12	1191121	6 x 12	141

QUIC-PASS® system not available for these metric rope sizes. Note: Fittings designed only to be used on exact sizes listed.
** NOTE: S-505 Standard Sleeves are recommended for use with 6 x 19 or 6 x 37, IPS or XIP (EIP), XXIP (EEIP), RRL, FC or IWRC wire rope. Before using any National Swage fitting with any other type lay, construction or grade of wire rope, it is recommended that the termination be destructive and documented to prove the adequacy of the assembly to be manufactured.

Copyright © 2023 The Crosby Group LLC All Rights Reserved

S-505 COLD TUFF® Standard Steel Sleeves

S-505 Standard Steel Sleeve Specifications												Swager / Die Data		
	Rope Size				Before Swage Dimensions (mm)					Maximum After Swage Dimensions (mm)		Standard Round Dies		QUIC-PASS® Dies
S-505 Stock No.	(in)	(mm)	Weight Per 100 (kg)	Pkg. Qty.	A	B	D	E	G	Standard Die	QUIC-PASS Die	Die Description	Standard Die Stock No.	QUIC-PASS Die Stock No.
1041063	1/4	6-7	3.60	250	25.4	16.8	7.88	7.12	11.9	14.5	14.4	1/4 Taper	1197528	1923530
1041090	5/16	8	4.08	200	38.1	23.1	11.2	11.2	15.8	19.1	19.5	3/8 Taper	1192364	1923551
1041107	3/8	9-10	5.44	100	38.1	23.1	11.9	9.91	16.8	19.1	19.5	3/8 Taper	1192364	1923551
1041125	7/16	11	13.6	50	51.0	31.0	14.0	16.5	21.6	25.7	25.8	1/2 Taper	1192408	1923572
1041143	1/2	13	13.2	50	51.0	31.0	16.0	14.2	23.1	25.7	25.8	1/2 Taper	1192408	1923572
1041161	9/16	14	30.8	25	70.0	37.3	17.5	16.0	26.2	31.5	31.7	5/8 Taper	1192444	1923593
1041189	5/8	16	25.9	25	70.0	37.3	19.1	16.0	27.7	31.5	31.7	5/8 Taper	1192444	1923593
1041205	3/4	18-19	40.0	20	81.0	43.7	23.1	21.3	32.5	37.1	37.5	3/4 Taper	1192462	1923614
1041223	7/8	22	62	10	90.5	51.5	26.2	25.4	38.9	42.7	44.1	7/8 Taper	1192480	1923635
1041241	1	25-26	89	10	102	58.0	29.5	28.6	43.7	49.0	49.7	1 Taper	1192505	1923656
1041269	1-1/8	28-29	118	Bulk	122	63.5	32.5	31.8	49.3	54.1	55.1	1-1/8 Open 1st Stage 2nd Stage	1192523 1192541	1923677
1041287	1-1/4	31-32	154	Bulk	132	70.5	36.5	35.8	55.0	58.9	61.1	1-1/4 Open 1st Stage 2nd Stage	1192621 1192587	1923698
1041303	1-3/8	34-35	195	Bulk	148	76.0	39.7	39.7	60.5	64.0	66.3	1-3/8 Open 1st Stage 2nd Stage	1192667 1192621	1923717
1041321	1-1/2	37-38	226	Bulk	159	82.5	42.9	42.9	67.0	69.0	72.0	1-1/2 Open 1st Stage 2nd Stage	1192649 1192667	1923736

Note: Fittings designed only to be used on exact sizes listed.

S-505 COLD TUFF® Standard Steel Sleeves

S-505 Standard Steel Sleeve Specifications											Swager / Die Data				
	Rope Size				Before Swage Dimensions (mm)					Maximum After Swage Dimensions (mm)		Stock No.			
												500 Tons 1000 Tons 1500 Tons 5x7	Front Load		Side Load	
S-505 Stock No.	(in)	(mm)	Weight Per 100 (kg)	Pkg. Qty.	A	B	D	E	G		Die Description		1500 Ton 6x12	3000 Ton 6x12	1500 Ton 6x12	3000 Ton 6x12
1041349	1-3/4	44-45	367	Bulk	184	97.5	49.2	50.0	79.5	78.7	1-3/4 Open 1st Stage 2nd Stage	1192685 1192701	—	—	—	—
1041367	2	50-52	510	Bulk	216	111	57.0	57.0	92.0	90.4	2 Open 1st Stage 2nd Stage	1192729 1192747	—	—	—	—
1041385	2-1/4	56-57	862	Bulk	243	128	63.5	64.5	102	105	2-1/4 Open 1st Stage 2nd Stage	1192765 1192783	1191089 1191043	1191089 1191043	—	1195085 1195067
1041401	2-1/2	62-64	1043	Bulk	267	140	70.0	71.5	114	114	2-1/2 Open 1st Stage 2nd Stage	—	1191061 1191089	1191061 1191089	1195370 1195469	1195076 1195085
1041429	2-3/4	68-70	1270	Bulk	292	146	76.0	78.5	121	119	2-3/4 Open 1st Stage 2nd Stage	—	1191034 1191052	1191034 1191052	1195389 1195478	1195094 1195101
1041447	3	75-76	1334	Bulk	305	152	82.5	86.0	127	126	3 Open 1st Stage 2nd Stage	—	1193201 1193229	1193201 1193229	1195398 1195487	1195110 1195129
1041483	3-1/2	87-89	2105	Bulk	356	178	98.5	100	148	147	3-1/2 Open 1st Stage 2nd Stage	—	1193247 1193265	1193247 1193265	—	1195138 1195147
1041492	3-3/4	93-95	2495	Bulk	381	191	103	108	160	158	3-3/4 Open 1st Stage 2nd Stage	—	—	1191114 1191132	—	1195263 1195272
1041508	4	100-105	3130	Bulk	406	206	111	114	173	170	4 Open 1st Stage 2nd Stage	—	—	1191150 1191178	—	1195156 1195165
1041526	4-1/2	112-114	4536	Bulk	457	232	124	129	195	189	4-1/2 Open 1st Stage 2nd Stage	—	—	1191187 1191203	—	1195174 1195183

Note: Fittings designed only to be used on exact sizes listed.

Copyright © 2023 The Crosby Group LLC All Rights Reserved

Crosby

S-501

- Forged from special bar quality carbon steel, suitable for cold forming.
- Swage socket terminations have an efficiency rating of 100% based on the catalog strength of wire rope.
- Hardness controlled by spheroidize annealing.
- Stamp for identification after swaging without concern for fractures (as per directions in Wire Rope End Terminations User's Manual).
- Swage sockets incorporate a reduced machined area of the shank which is equivalent to the proper 'after swage' dimension. Before swaging, this provides for an obvious visual difference in the shank diameter. After swaging, a uniform shank diameter is created allowing for a QUIC-CHECK® and permanent visual inspection opportunity.
- S-501 Swage Sockets are recommended for use with 6 x 19 or 6 x 37, IPS or XIP (EIP), XXIP (EEIP), RRL, FC or IWRC wire rope.
- In accordance with ASME B30.9, all slings terminated with swage sockets shall be proof loaded.*

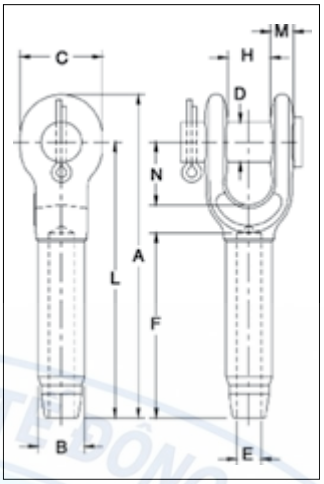

QUIC-CHECK®

S-501 Open Swage Sockets

S-501 and S-501B Open Socket Specifications																		Swager / Die Data			
		Rope Size				Before Swage Dimensions (mm)										Tolerance +/-	Max. After Swage Dim. (mm)		Stock No.		Side Load	
S-501 Stock No.	S-501B Stock No. †	(in)	(mm)	Wt. Each (kg)	Ultimate Load** (t)	A	B	C	D	E	F	H	L	M	N	H		Die Description	500 1000 1500 Ton 5 x 7	1500 3000 Ton 6 x 12	1500 Ton 6 x 12	3000 Ton 6 x 12
1039021	1054001	1/4	6	0.24	5.4	122	12.7	35.1	17.5	6.85	54.0	17.5	102	9.65	38.1	1.52	11.7	1/4 Socket	1192845	-	-	-
1039049	1054010	5/16	8	0.51	11.8	159	19.6	41.1	20.6	8.65	81.0	20.6	135	11.9	44.5	1.52	18.0	5/16-3/8 Socket	1192863	-	-	-
1039067	1054029	3/8	9-10	0.59	13.6	159	19.6	41.1	20.6	10.4	81.0	20.6	135	11.9	44.5	1.52	18.0	5/16-3/8 Socket	1192863	-	-	-
1039085	1054038	7/16	11-12	0.94	18.1	198	24.9	51.0	25.4	12.2	108	25.4	170	14.2	51.0	1.52	23.1	7/16-1/2 Socket	1192881	-	-	-
1039101	1054047	1/2	13	0.94	21.3	198	24.9	51.0	25.4	14.0	108	25.4	170	14.2	51.0	1.52	23.1	7/16-1/2 Socket	1192881	-	-	-
1039129	1054056	9/16	14	2.12	31.8	241	31.8	60.5	30.2	15.5	135	31.8	207	17.3	57.0	1.52	29.5	9/16-5/8 Socket	1192907	-	-	-
1039147	1054065	5/8	16	2.05	34.9	241	31.8	60.5	30.2	17.0	135	31.8	207	17.3	57.0	1.52	29.5	9/16-5/8 Socket	1192907	-	-	-
1039165	1054074	3/4	18-20	3.62	43.5	294	39.4	70.0	35.1	20.3	162	38.1	254	20.3	70.0	1.52	36.1	3/4 Socket	1192925	-	-	-
1039183	1054083	7/8	22	5.23	51.5	341	43.2	79.5	41.1	23.9	189	44.5	295	23.9	82.5	1.78	39.4	7/8 Socket	1192943	-	-	-
1039209	1054092	1	24-26	8.07	71.4	393	50.5	93.5	51.0	26.9	216	51.0	340	26.9	95.5	2.03	45.7	1 Socket	1192961	-	-	-
1039227	1054104	1-1/8	28	11.5	83.3	440	57.0	105	57.0	30.2	245	57.0	381	30.2	108	2.54	52.0	1-1/8 Socket	1192989	-	-	-
1039245	1054113	1-1/4	32	16.1	109	484	64.5	117	63.5	33.8	272	63.5	419	31.0	119	2.54	58.5	1-1/4 Socket	1193005	-	-	-
1039263	1054122	1-3/8	34-36	19.8	136	532	71.0	127	63.5	36.8	297	63.5	461	35.1	133	2.07	65.0	1-3/8 Socket	1193023	-	-	-
1039281	1054131	1-1/2	38-40	26.5	181	589	78.0	140	70.0	40.1	325	76.0	502	43.2	145	2.54	71.5	1-1/2 Socket	1193041	1191267	1195355	1195192
1039307	1054140	1-3/4	44	40.3	228	676	86.0	170	89.0	47.2	378	89.0	584	53.6	171	2.54	77.5	1-3/4 Socket	1193069	1191276	1195367	1195209
1042767	1054159	2	48-52	66	272	799	100	203	95.5	53.5	432	102	683	60.0	203	2.54	90.5	2 Socket	1193087	1191294	1195379	1195218

*Maximum Proof Load shall not exceed 50% of XXIP rope catalog breaking strength.** The Ultimate Loads of 3/4" through 1 1/4" sizes have been increased to meet the requirements for 8 strand 2160 Grade pendants.**† Assembly with bolt, nut and cotter pin. Note: Fittings designed only to be used on exact sizes listed.**
NOTE: Before using any Crosby fitting with any other type lay, construction or grade of wire rope, it is recommended that the termination be destructive tested and documented to prove the adequacy of the assembly to be manufactured.

Copyright © 2023 The Crosby Group LLC All Rights Reserved

S-502

- Forged from special bar quality carbon steel, suitable for cold forming.
- Swage socket terminations have an efficiency rating of 100% based on the catalog strength of wire rope.
- Hardness controlled by spheroidize annealing.
- Stamp for identification after swaging without concern for fractures (as per directions in Wire Rope End Terminations User's Manual).
- Swage sockets incorporate a reduced machined area of the shank which is equivalent to the proper 'after swage' dimension. Before swaging, this provides for an obvious visual difference in the shank diameter. After swaging, a uniform shank diameter is created allowing for a QUIC-CHECK® and permanent visual inspection opportunity.
- S-502 Swage Sockets are recommended for use with 6 x 19 or 6 x 37, IPS or XIP (EIP), XXIP (EEIP), RRL, FC or IWRC wire rope.
- In accordance with ASME B30.9, all slings terminated with swage sockets shall be proof loaded.*

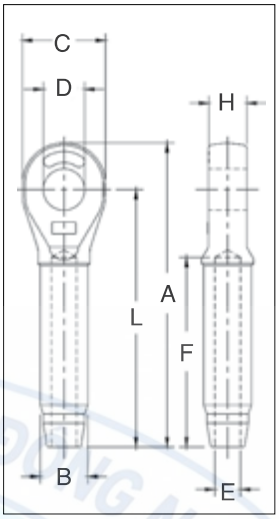

QUIC-CHECK®

S-502 Closed Swage Sockets

S-502 Closed Socket Specifications															Swager / Die Data			
	Rope Size				Before Swage Dimensions (mm)										Stock No.		Side Load	
S-502 Stock No.	(in)	(mm)	Wt. Each (kg)	Ultimate Load** (t)	A	B	C	D	E	F	H	L	Max. After Swage Dim. (mm)	Die Description	500 1000 1500 Ton 5 x 7	1500 3000 Ton 6 x 12	1500 Ton 6 x 12	3000 Ton 6 x 12
1039325	1/4	6	.15	5.4	109	12.7	35.1	35.1	6.85	54.0	12.7	89.0	11.7	1/4 Socket	1192845	-	-	-
1039343	5/16	8	.34	11.8	138	19.6	41.1	41.1	8.65	81.0	17.0	114	18.0	5/16-3/8 Socket	1192863	-	-	-
1039361	3/8	9-10	.33	13.6	138	19.6	41.1	41.1	10.4	81.0	17.0	114	18.0	5/16-3/8 Socket	1192863	-	-	-
1039389	7/16	11-12	.64	18.1	176	24.9	51.0	51.0	12.2	108	21.8	146	23.1	7/16-1/2 Socket	1192881	-	-	-
1039405	1/2	13	.64	21.3	176	24.9	51.0	51.0	14.0	108	21.8	146	23.1	7/16-1/2 Socket	1192881	-	-	-
1039423	9/16	14	1.32	31.8	220	31.8	60.5	60.5	15.5	135	28.7	184	29.5	9/16-5/8 Socket	1192907	-	-	-
1039441	5/8	16	1.29	34.9	220	31.8	60.5	60.5	17.0	135	28.7	184	29.5	9/16-5/8 Socket	1192907	-	-	-
1039469	3/4	18-20	2.27	43.5	261	39.4	73.0	73.0	20.3	162	33.3	219	36.1	3/4 Socket	1192925	-	-	-
1039487	7/8	22	3.08	51.5	303	43.2	79.0	79.0	23.9	189	38.1	257	39.4	7/8 Socket	1192943	-	-	-
1039502	1	24-26	4.72	71.4	344	50.5	92.0	92.0	26.9	216	44.5	292	45.7	1 Socket	1192961	-	-	-
1039520	1-1/8	28	6.72	83.3	382	57.0	102	102	30.2	243	51.0	324	52.0	1-1/8 Socket	1192989	-	-	-
1039548	1-1/4	32	9.78	109	430	64.5	114	114	33.8	270	57.0	365	58.5	1-1/4 Socket	1193005	-	-	-
1039566	1-3/8	34-36	12.9	136	473	71.0	127	127	36.8	297	57.0	400	65.0	1-3/8 Socket	1193023	-	-	-
1039584	1-1/2	38-40	17.3	181	511	78.0	137	137	40.1	325	65.0	432	71.5	1-1/2 Socket	1193041	1191267	1195355	1195192
1039600	1-3/4	44	23.1	228	598	86.0	159	159	47.2	378	76.0	508	77.5	1-3/4 Socket	1193069	1191276	1195367	1195209
1042589	2	48-52	40.5	272	702	100	184	184	53.5	432	82.5	584	90.5	2 Socket	1193087	1191294	1195379	1195218

Maximum Proof Load shall not exceed 50% of XXIP rope catalog breaking strength. *The Ultimate Loads of 3/4" through 1 1/4" sizes have been increased to meet the requirements for 8 strand 2160 Grade pendants. Note: Fittings designed only to be used on exact sizes listed.

NOTE: Before using any Crosby fitting with any other type lay, construction or grade of wire rope, it is recommended that the termination be destructive tested and documented to prove the adequacy of the assembly to be manufactured.

Copyright © 2023 The Crosby Group LLC All Rights Reserved

Crosby

S-409

- Swage button terminations have an efficiency rating of 98% based on the catalog strength of wire rope.
- Special processed, low carbon steel.
- COLD TUFF® for better swageability.
- Stamp for identification after swaging without concern for fractures (as per directions in the Wire Rope End Terminations User's Manual).
- S-409 Buttons are recommended for use with 6 x 19 or 6 x 37, IPS or XIP (EIP), RRL, FC or IWRC wire rope. Before using any National Swage fitting with any other type lay, construction or grade of wire rope, it is recommended that the termination be destructive tested and documented to prove the adequacy of the assembly to be manufactured.

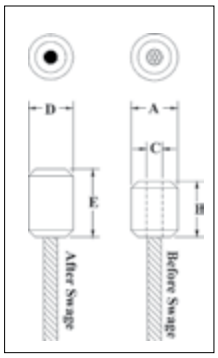

S-409 COLD TUFF® Buttons

S-409 Steel Swage Button Specifications										Swager / Die Data	
		Rope Size			Before Swage Dimensions (mm)			After Swage Dimensions (mm)			
S-409 Stock No.	Size No.	(in)	(mm)	Weight Per 100 (kg)	A	B	C	D Maximum After Swage Dimensions	E Length*	Die Description	Stock No. 500 Tons 1000 Tons 1500 Tons 5 x 7
1040171	1 SB	1/8	3	.91	10.7	12.7	3.56	10.2	15.5	1/8 - 1/4 Button	1191621
1040215	3 SB	3/16	5	1.81	14.2	17.8	5.08	13.2	21.3	1/4 1st Stage	1197528
1040251	5 SB	1/4	6-7	3.63	17.3	26.9	7.87	14.7	33.5	1/8 - 1/4 Button	1191621
1040297	7 SB	5/16	8	7.26	22.4	28.7	9.14	19.6	33.8	3/8 1st Stage	1192364
1040313	8 SB	3/8	9-10	6.80	22.4	37.6	10.7	19.6	42.9	3/8 1st stage	1192364
1040331	9 SB	7/16	11	13.6	28.7	41.4	12.2	26.2	49.3	1/2 1st Stage	1192408
1040359	10 SB	1/2	13	22.7	33.3	48.0	14.0	29.5	55.1	5/8 Socket	1192907
1040377	11 SB	9/16	14	31.8	36.6	51.3	15.5	32.8	61.2	9/16 -5/8 Button	1191665
1040395	12 SB	5/8	16	45.4	39.6	61.5	17.0	36.1	73.4	3/4 Socket	1192925
1040411	13 SB	3/4	18-20	59	42.7	69.6	20.3	39.6	82.6	3/4 1st Stage	1192462
1040439	14 SB	7/8	22	100	50.8	83.1	23.9	45.7	98.0	7/8 1st Stage	1192480
1040457	15 SB	1	25-26	141	57.2	93.2	26.9	52.1	111	1 1st Stage	1192505
1040475	16 SB	1-1/8	28-29	204	65.0	103	30.2	58.4	122	1-1/8 1st Stage	1192523
1040493	17 SB	1-1/4	31-32	295	71.4	116	33.8	65.0	138	1-3/8 Socket	1193023

* NOTE: Length is measured from outside end of termination. Fittings designed only to be used on exact sizes listed.

S-506

- For turnback wire rope splicing.
- Special processed low carbon steel.
- Turnback terminations have efficiency ratings of 94% based on the catalog strength of wire rope.
- COLD TUFF® for better swageability and low temperature toughness.
- S-506 Sleeves are recommended for use with 6 x 19 or 6 x 37, IPS or XIP (EIP), RRL, FC or IWRC wire rope. Before using any National Swage fitting with any other type lay, construction or grade of wire rope, it is recommended that the termination be destructive tested and documented to prove the adequacy of the assembly to be manufactured.
- Resists cracking when swaged (equals or exceeds stainless steel sleeves).
- Stamp for identification after swaging without concern for fractures (as per directions in the Wire Rope End Termination User's Manual).

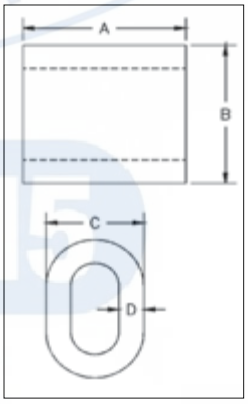

S-506 COLD TUFF® Duplex Non-Tapered Sleeves

S-506 Steel Duplex Non-Tapered Sleeve Specifications										Swager / Die Data	
	Rope Size				Before Swage Dimensions (mm)						
S-506 Stock No.	(in)	(mm)	Weight Per 100 (kg)	Pkg. Qty.	A	B	C	D	Max. After Swage Dimensions (mm)	Die Description	Stock No. 500 Tons 1000 Tons 1500 Tons 5 x 7
1039334	5/16	8	7.7	200	31.8	26.9	20.6	4.85	19.6	3/8 1st Stage	1192364
1039352	3/8	9-10	5.9	100	31.8	28.4	20.6	3.55	19.6	3/8 1st Stage	1192364
1039370	7/16	11	14.1	50	41.4	35.8	25.9	4.85	26.2	1/2 1st Stage	1192408
1039398	1/2	13	12.2	50	41.4	36.6	25.9	4.05	26.2	1/2 1st Stage	1192408
1039414	9/16	14	28.6	25	57.0	43.7	31.2	5.85	32.8	5/8 1st Stage	1192444
1039432	5/8	16	24.5	25	57.0	46.7	32.5	5.10	32.8	5/8 1st Stage	1192444
1039450	3/4	18-20	41.3	10	67.0	55.0	38.6	5.85	39.4	3/4 1st Stage	1192462
1039478	7/8	22	57	10	73.0	63.5	44.5	6.85	45.7	7/8 1st Stage	1192480
1039496	1	25-26	85	10	77.5	72.0	51.0	8.40	52.0	1 1st Stage	1192505
1039539	1-1/4	30-32	174	Bulk	103	89.0	63.5	9.65	65.0	1-3/8 Socket	1193023

Note: Fittings designed only to be used on exact sizes listed.

Copyright © 2023 The Crosby Group LLC All Rights Reserved

G-411

- Hot-dip galvanized steel.
- The standard choice for light duty loading conditions and applications.
- Meets the performance requirements of EN13411-1:2002.
- Meets the performance requirements of Federal Specification FF-T-276b Type II, except for those provisions required of the contractor.

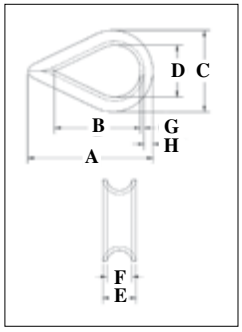

Standard Wire Rope Thimbles

Rope Diameter (in)	Rope Diameter (mm)	Stock No	Weight Per 100 (kg)	Dimensions (mm) A	B	C	D	E	F	G	H
1/8	3-4	1037256	1.59	49.3	33.3	26.9	17.5	6.35	4.05	1.25	3.30
3/16	5	1037274	1.59	49.3	33.3	26.9	17.5	7.85	5.60	1.25	3.30
1/4	6-7	1037292	1.59	49.3	33.3	26.9	17.5	9.65	7.10	1.25	3.30
5/16	8	1037318	1.81	54.0	38.1	31.8	20.6	11.2	8.65	1.25	3.30
3/8	9-10	1037336	3.04	60.5	41.4	37.3	23.9	13.5	10.4	1.50	4.06
1/2	11-13	1037354	5.67	70.0	47.8	44.5	28.7	17.5	13.5	2.05	4.83
5/8	16	1037372	15.7	89.0	57.0	60.5	35.1	23.1	16.8	3.30	8.64
3/4	18-20	1037390	21.4	95.5	63.5	68.5	41.4	27.4	19.8	3.55	8.64
7/8	22	1037416	38.4	127	89.0	81.0	47.8	32.3	23.9	4.05	11.2
1	24-26	1037434	44.2	145	108	95.5	63.5	35.3	26.9	4.05	10.4
1-1/8 - 1-1/4	28-32	1037452	79	159	114	109	70.0	44.5	33.3	5.60	12.7

G-408

- Hot-dip galvanized steel.
- Meets the performance requirements of EN13411-1:2002.
- Recommended for light duty applications where assembly into another fitting (i.e., shackle or master link) is required.

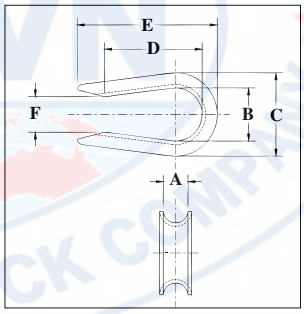

Open Pattern Thimbles

Rope Diameter (in)	Rope Diameter (mm)	Stock No	Weight Per 100 (kg)	Dimensions (mm) A	B	C	D	E	F
1/4	6-7	1037531	1.36	7.10	17.5	26.9	35.8	51.5	9.65
5/16	8	1037559	1.72	8.65	20.6	31.8	38.9	55.0	12.7
3/8	9-10	1037577	3.18	11.2	23.9	37.3	43.7	62.5	15.7
1/2	11-13	1037595	5.67	13.5	28.4	44.5	37.3	72.0	19.1
5/8	16	1037611	11.3	16.8	35.1	60.5	59.5	91.0	25.4

S-412

- Cast ductile iron.
- Fits pin for open wire rope socket, boom pendant clevis, and wedge socket.

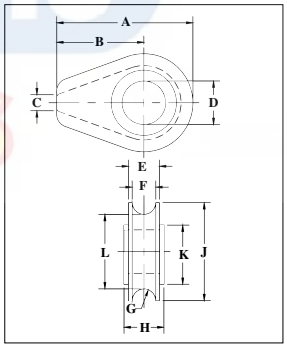

Solid Wire Rope Thimbles

Rope Diameter (in)	Rope Diameter (mm)	Stock No	Weight Per 100 (kg)	Dimensions (mm) A	B	C	D	E	F	G	H	J	K	L
1/2	13	1037121	.28	71.5	44.5	6.35	26.9	19.1	14.2	7.10	22.4	54.0	41.4	39.6
5/8	16	1037149	1.00	119	76.0	9.65	33.3	26.9	20.6	10.4	28.7	86.0	57.0	65.0
3/4	18-20	1037167	1.05	119	76.0	9.65	38.1	26.9	20.6	10.4	35.1	86.0	57.0	65.0
7/8	22	1037185	2.47	154	97.0	12.7	44.5	35.1	26.9	13.5	41.4	114	82.5	87.5
1	24-26	1037201	2.38	154	97.0	12.7	54.0	35.1	26.9	13.5	46.0	114	82.5	87.5
1-1/8	28-30	1037229	4.21	184	116	16.0	60.5	44.5	33.3	16.8	52.5	137	98.5	103
1-1/4 - 1-3/8	32-35	1037247	4.45	184	116	16.0	67.0	49.3	38.9	19.8	58.5	137	98.5	105

Copyright © 2023 The Crosby Group LLC All Rights Reserved

Crosby

G-414

- Available in hot-dip galvanized or stainless steel (Type 304).
- Stainless steel recommended for more corrosive environments where greater protection is required.
- Greater protection against wear and deformation of the wire rope eye.
- Longer service life.
- Meets the performance requirements of Federal Specification FF-T-276b Type III, except for those provisions required of the contractor.
- Meets the performance requirements of EN13411-1:2002.

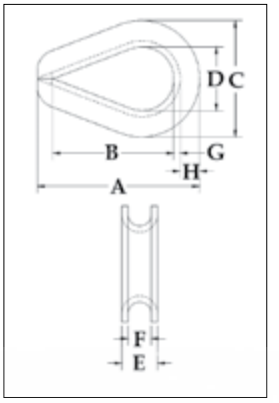

Extra Heavy Wire Rope Thimbles

Rope Diameter		Stock No.			Dimensions (mm)							
(in)	(mm)	G-414 Stock No	SS-414 Stainless	Weight Per 100 (kg)	A	B	C	D	E	F	G	H
1/4	6-7	1037639	1037960	2.95	55.5	41.4	38.1	22.4	11.2	7.10	1.50	5.85
5/16	8	1037657	1037988	5.35	63.5	47.8	46.0	26.9	14.0	8.65	2.05	7.10
3/8	9-10	1037675	1038004	9.80	73.0	54.0	54.0	28.7	16.8	10.4	2.80	8.65
7/16	11-12	1037693	-	15.7	82.5	60.5	60.5	31.8	18.8	11.9	3.30	9.65
1/2 - 9/16	13-15	1037719	1038022	23.1	92.0	70.0	70.0	38.1	23.4	13.5	3.55	10.4
5/8	16	1037755	1038040	34.3	108	82.5	79.5	44.5	26.2	16.8	4.05	12.7
3/4	18-20	1037773	1038068	72	127	95.5	96.5	51.0	33.0	19.8	5.60	16.8
7/8	22	1037791	-	81	140	108	108	57.0	37.3	23.9	5.60	19.1
1	24-26	1037817	-	142	156	114	125	63.5	44.5	26.9	6.35	22.4
1-1/8 - 1-1/4	28-32	1037835	-	181	178	130	149	73.0	47.8	33.3	6.35	28.7
1-1/4 - 1-3/8	32-35	1037853	-	402	230	165	173	89.0	57.2	36.6	9.65	28.7
1-3/8 - 1-1/2	35-38	1037871	-	587	229	159	181	89.0	66.5	39.6	12.7	28.7
1-5/8	40	1037899	-	771	286	203	207	102	76.2	43.7	12.7	35.1
1-3/4	44	1037915	-	805	310	229	216	114	77.7	46.7	12.7	33.3
1-7/8 - 2	48-52	1037933	-	1259	384	305	264	152	85.9	53.0	12.7	38.1
2-1/4	56	1037951	-	1792	435	356	302	178	98.6	60.5	16.0	41.4

G-414 SL

- Prevents the shackle from being removed and replaced in the field, which could compromise the certified integrity of the sling assembly.
- Available in got-dip galvanized. Crosby's shackle locking thimbles are galvanized after the welding of the wedge has been completed.
- Greater protection against wear and deformation of the wire rope eye.
- Longer service life.
- Meets the performance requirements of Federal Specification FF-T-276b Type III, except for those provisions required of the contractor.
- Meets the performance requirements of EN13411-1:2002

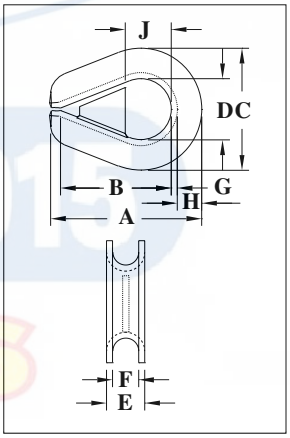

Extra Heavy Wire Rope Thimbles (Shackle-Loc)

Rope Diameter				Dimensions (mm)								
(in)	(mm)	Stock No	Weight Per 100 (kg)	A	B	C	D	E	F	G	H	J
3/8	9-10	1036800	9.80	73.0	54.0	54.0	28.7	16.8	10.4	2.80	8.65	20.5
1/2 - 9/16	13-15	1036808	23.1	92.0	70.0	70.0	38.1	23.4	13.5	3.55	10.4	28.4
5/8	16	1036817	34.3	108	82.5	79.5	44.5	26.2	16.8	4.05	12.7	31.7
3/4	18-20	1036826	72	127	95.5	96.5	51.0	33.0	19.8	5.60	16.8	38.1
7/8	22	1036835	81	140	108	108	57.0	37.3	23.9	5.60	19.1	41.4
1	24-26	1036844	142	156	114	125	63.5	44.5	26.9	6.35	22.4	47.7
1-1/8 - 1-1/4	28-32	1036853	181	178	130	149	73.0	47.8	33.3	6.35	28.7	54.1
1-3/8 - 1-1/2	35-38	1036862	587	229	159	181	89.0	66.5	39.6	12.7	28.7	63.5

Copyright © 2023 The Crosby Group LLC All Rights Reserved

ROV

Manufactured to withstand the toughest environments on earth.

CÔNG TY CỔ PHẦN PHÁT TRIỂN KINH TẾ ĐÔNG NAM Á
ASEAN JSC.VN
ASEAN DEVELOPMENT JOINT STOCK COMPANY
ISO 9001:2015
Since 2006

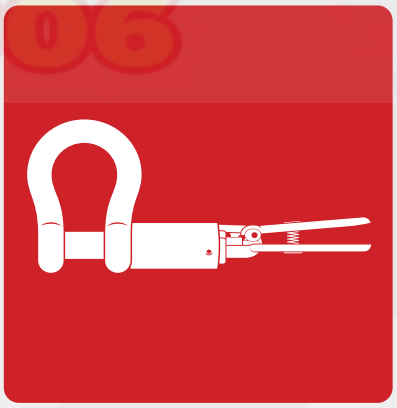

the Crosby group®

thecrosbygroup.com

Crosby

G-2100
Release & Retrieve
ROV Shackle with
QUIC-Thread Bolt

G-2110
Release & Retrieve
ROV Shackle with
Non - Thread Bolt

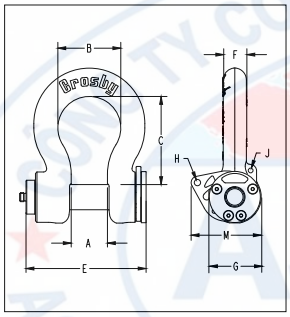

- Forged alloy bow with an industry best 6 to 1 performance design factor.
- Patented captured bolt can withstand over 907 kg (2,000 lb) of pull-out force.
- Galvanized bow with an API RP 17H color compliant coating.
- Galvanized alloy bolt (non-threaded) (G-2110)
- On average, QUIC-Thread bolt requires only 3.5 rotations for full engagement (G-2100)
- Raised pad for serialization.
- API RP 17H compliant 316 stainless steel handles available in T, D, F, and Eye models (sold separately).
- Built in eyelets for optional tether points.
- Monkey fist(s) included.
- Capacities from 9.5t through 85t.
- Forged steel, Quenched & Tempered, with alloy pins.
- Working Load Limit permanently shown on every shackle.
- QUIC-CHECK® deformation and angle indicators forged on the bow.

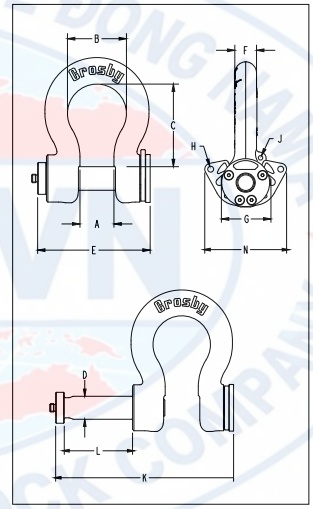

G-2100 ROV Release & Retrieve Shackle — QUIC-Threaded

Working Load Limit (t)*	Stock No.	Weight Each (kg)	Dimensions (mm)											
			A	B	C	D	E	F	G	H	J	K	L	N
9.5	2038739	5.1	46.0	73.9	108	31.8	186	29.5	2.68	11.2	7.9	293	107	97.3
12	2038762	6.2	51.6	82.6	119	35.1	197	32.8	3.00	11.2	7.9	311	114	101
17	2038785	10.7	60.5	98.6	146	41.4	217	38.9	3.62	12.7	7.9	349	132	126
25	2038614	17.5	73.2	127	178	50.8	242	46.7	4.20	12.7	9.7	393	151	141
35	2038808	23.3	82.6	146	197	57.9	264	52.8	4.82	12.7	9.7	431	167	149
55	2038831	49	105	184	266	70.6	320	69.1	5.81	12.7	9.7	527	207	191
85	2038877	71	127	200	330	83.3	361	79.2	6.50	12.7	12.7	600	238	199

6:1 Design Factor. *Note: Maximum Proof Loads are 2xWLL in metric tons.

G-2110 ROV Release & Retrieve Shackle — Non-Threaded

Working Load Limit (t)*	Stock No.	Weight Each (kg)	Dimensions (mm)											
			A	B	C	D	E	F	G	H	J	K	L	N
9.5	2038740	5.2	46.0	73.9	108	31.8	186	29.5	68.1	9.7	7.9	293	107	126
12	2038763	6.3	51.6	82.6	119	35.1	197	32.8	76.2	9.7	7.9	311	114	126
17	2038786	10.8	60.5	98.6	146	41.4	217	38.9	91.9	12.7	7.9	349	132	160
25	2038621	17.5	73.2	127	178	50.8	242	46.7	107	12.7	9.7	393	151	176
35	2038809	23.3	82.6	146	197	57.9	264	52.8	122	12.7	9.7	431	167	176
55	2038832	49	105	184	266	70.6	320	69.1	148	12.7	9.7	527	207	217
85	2038878	71	127	200	330	83.3	361	79.2	165	12.7	12.7	600	238	217

6:1 Design Factor. Maximum Proof Load is 2 times the Working Load Limit.

Lead Rated QUIC-CHECK® Q&T

APPLICATION AND WARNING INFORMATION
SECTION 17

Copyright © 2023 The Crosby Group LLC All Rights Reserved

"D" Handle

"F" Handle

"Eye" Handle

"T" Handle

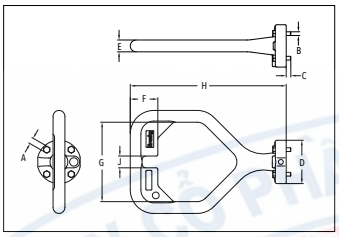

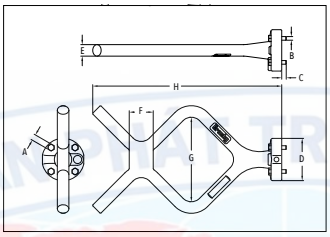

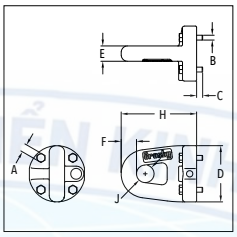

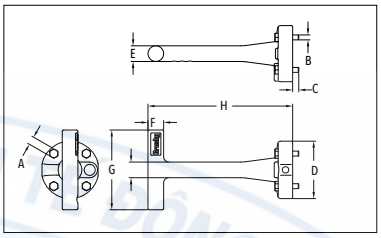

- New Interchangeable handles for ROV shackle bolts.
- For use with G-2100 and G-2110 ROV shackles only.
- Handles are stainless steel and painted fluorescent orange.
- "D" and "F" handle kits available containing handle, retaining bolts, and individual packet of Loctite for easy installation.

G-42100H ROV Handles

Handle Style	Stock No.	Weight Each (kg)	Dimensions (mm)									
			A	B	C	D	E	F	G	H	J	K
D	1021324	10.0	7.1	6	7.4	70.0	19.1	44.5	128	251	19.1	–
F	1021315	11.1	7.1	6	7.4	70.0	19.1	44.5	140	312	–	–
T	1021306	5.4	7.1	6	7.4	70.0	19.1	19.1	97	157	–	19.1
Eye	1021333	4.7	7.1	6	7.4	70.0	19.1	19.1	–	93.7	21.8	–

Crosby G-2100 Release & Retrieve ROV Shackle with QUIC-Threaded Bolt
thecrosbygroup.com/ROV-threaded

Crosby G-2110 Release & Retrieve ROV Shackle with Non-Threaded Bolt
thecrosbygroup.com/ROV-non-threaded

Copyright © 2023 The Crosby Group LLC All Rights Reserved

ROV Shackles

The ROV Retrieve Shackle is designed for smooth and easy use in retrieving and releasing subsea lifting and rigging operations. It has no loose parts in closed or opened position. Therefore there is no need for wires or monkey fists. The high visibility handles are close-die forged and has double safety functions. The shark tooth locking with indicator that will show if the shackle is in open or locked position as well as the spring loaded handle. The handle is the same size, regardless of size of shackle. The ROV Retrieve Shackle No. 861 is an easy to operate shackle, saving valuable time and money.

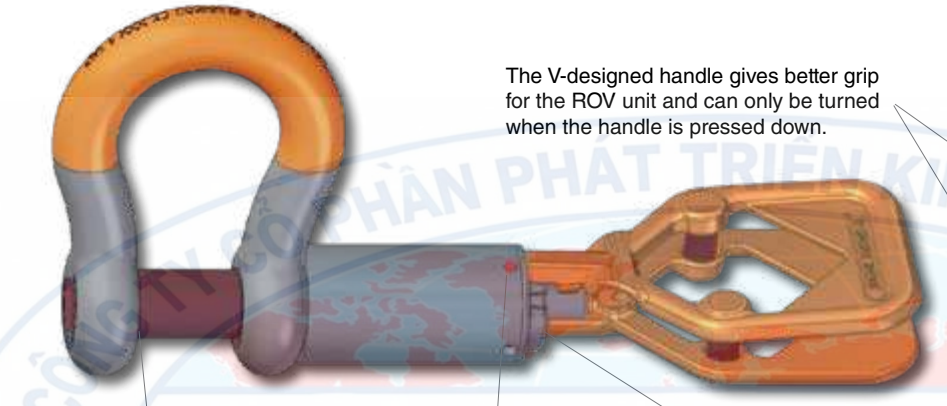

The V-designed handle gives better grip for the ROV unit and can only be turned when the handle is pressed down.

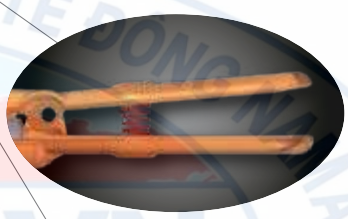

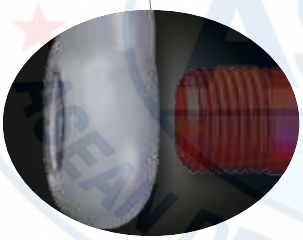

Tapered bolt end for easy attachment

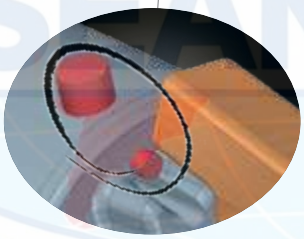

Indicator for open and closed position

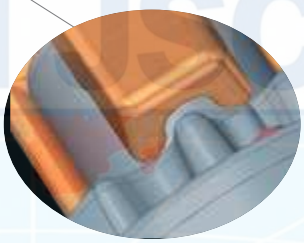

'Shark tooth' locking

ROV Retrieve Shackle No 861

All shackles have unique markings.

- Dim. according to EN 13889
- High tensile steel, Quenched & Tempered
- All load bearing parts hot-dip galvanized
- 6:1 Design Factor
- Test certificate and traceable 3.1 certificate supplied upon request.
- Temperature: -40ºC to 200ºC

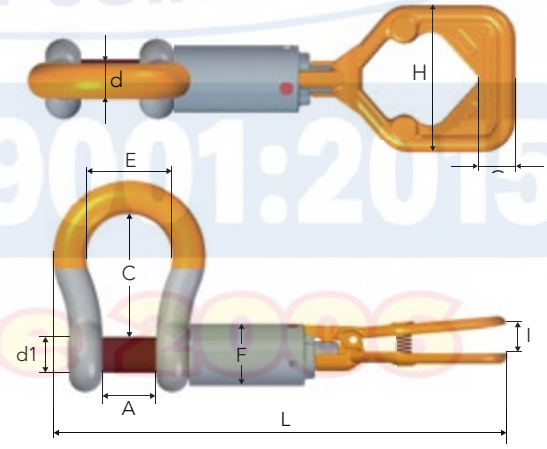

CE

Stock No.	WLL (t)	Dimensions (mm)										Weight (kg)
		d1	d	A	C	E	F	L	I	H	G	
A086128	9.5	32	28	46	108	74	60	440	31	132	33	6.5
A086132	12.0	35	32	52	119	83	60	460	31	132	33	8.0
A086138	17.0	42	38	60	146	98	63.5	501	31	132	33	10.0
A086145	25.0	50	45	74	178	127	70	565	31	132	33	15.7
A086152	35.0	57	50	83	197	138	76	604	31	132	33	20.0
A086164	55.0	70	65	105	260	180	88	712	31	132	33	42.0
A086176	85.0	83	84	133	330	190	108	745	31	132	33	78.3

Copyright © 2023 The Crosby Group LLC All Rights Reserved

ROV Release Shackle No 863

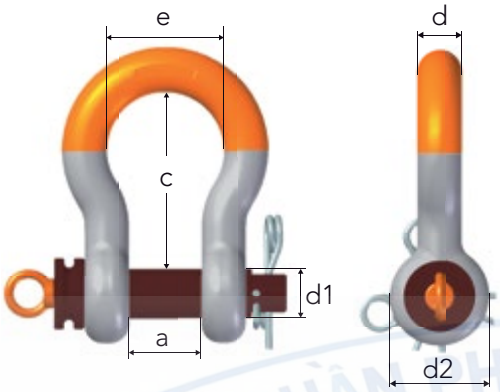

- Equipped with bolt and two locking pins
- Dim. according to EN 13889
- High tensile steel, Quenched & Tempered
- All load bearing parts hot-dip galvanized
- 5:1 Design Factor
- Test certificate and traceable 3.1 certificate supplied on request.
- Temperature: -40ºC to 200ºC

CE

Stock No.	WLL (t)	Dimensions (mm)						Weight (kg)
		d1	d	a	c	d2	e	
A086322	6.5	25	22	37	84	52	58	1.6
A086328	9.5	32	28	46	108	64	74	3.4
A086332	12.0	35	32	52	119	72	83	5.0
A086338	17.0	42	38	60	146	84	98	7.8
A086345	25.0	50	45	74	178	105	127	13.9
A086352	35.0	57	50	83	197	127	138	17.0
A086364	55.0	70	65	105	260	152	180	37.0

G-209R

- Capacities from 6.5t through 55t.
- Forged steel, Quenched & Tempered, with alloy pins.
- Working Load Limit permanently shown on every shackle.
- Fatigue rated.
- QUIC-CHECK® deformation and angle indicators forged on the bow.
- All ROV shackle bows are galvanized, then painted fluorescent yellow.
- Look for the Red Pin®... the mark of genuine Crosby quality.

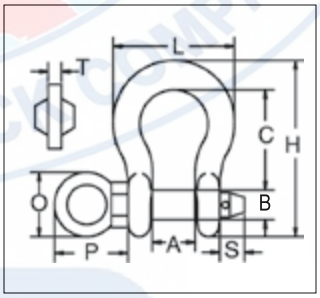

G-209R Subsea Shackles

Working Load Limit (t)*	Stock No.	Weight Each (kg)	Dimensions (mm)								
			A +/- .25	B	C	H	L	O	P	S	T
6.5	1020872	1.69	36.6	25.4	84	148	102	50	58	17	10
8.5	1020902	2.59	42.9	28.7	95.5	167	119	50	61	18	10
9.5	1020932	3.77	46.0	31.8	108	190	131	70	83	18	12
12	1020952	5.02	51.5	35.1	119	210	146	70	84	23	12
13.5	1020972	6.65	57.0	38.1	133	233	162	75	91	23	15
17	1020992	8.58	60.5	41.4	146	254	175	75	93	24	15
25	1021102	14.1	73.0	51.0	178	313	225	90	114	29	17.5
35	1021125	21.4	82.5	57.0	197	348	253	106	132	30	20
55	1021158	42.8	105.0	70.0	267	453	327	120	145	45	25

5:1 Design Factor. Maximum Proof Load is 2.0 times the Working Load Limit.

Load Rated Fatigue Rated QUIC-CHECK QT CE

APPLICATION AND WARNING INFORMATION SECTION 17

Copyright © 2023 The Crosby Group LLC All Rights Reserved

Crosby

L-562A

- Hook identification code stamped on each hook.
- Quenched & Tempered.
- QUIC-CHECK® angle indicators forged into the top eye; and deformation and angle indicators forged on the hook.
- Fluorescent yellow finish for high subsea visibility.
- Tip extension allows for easy handling.
- Sizes 5.4t through 31.5t utilize a new integrated latch (S-4320) that meets the world-class standard for lifting.
  - Heavy duty stamped latch interlocks with the hook tip.
  - High cycle, long life spring.
- Pad eyes are provided on either side of hook as cable guides. The cable is passed through a hole drilled in the latch that assists in allowing the remotely operated cable to open latch.
- Crosby supplies latches with drilled holes for sizes 5.4t through 31.5t. Other sizes can be fitted by your local Authorized Crosby Dealer. Cables are not provided by Crosby.

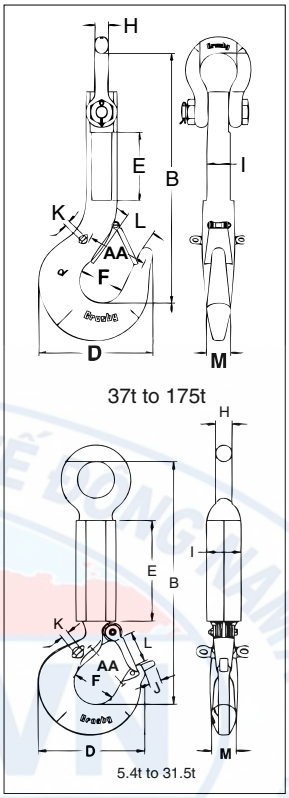

Load Profiled Fatigue Profiled QUIC-CHECK® Q&T CE

APPLICATION AND WARNING INFORMATION
SECTION 17

L-562A ROV Eye Shank Hooks

Working Load Limit (t)	Hook ID Code	L-562A Stock No.	Weight Each (kg)	Dimensions (mm)											Replacement Latch Stock No.
				I	E	B	D	J	F	M	H	L	K	AA**	
†5.4	IA	1297722	9.5	65	250	421	123	9.9	51	29	22	35	6.4	63.5	1096515
†11.5	KA	1297792	15	65	250	518	192	30	76	41	32	53	9.7	330	1096611
†16	LA	1297806	18	65	250	550	212	30	83	49	35	58	9.7	330	1096657
†22	NA	1297862	31	85	250	608	263	45	108	60	40	77	19	305	1096704
31.5	OA	1298042	44	85	250	660	346	-	127	76	48	106	19	254	1090161
‡37	PA	1298049	44	80	235	828	357	-	137	76	47	95	19	203	1090189
‡45	SA	1298057	90	80	235	865	392	-	152	83	47	108	19	177	1090189
‡60	TA	1298087	131	90	215	941	470	-	178	99	53	130	19	165	1090205
‡100	WA	1298103	303	140	300	1185	584	-	173	140	69	124	19	127	1090241
‡150	XA	1298117	395	150	230	1233	619	-	171	152	92	137	19	101	1090241
**175	YA	1298130	515	170	255	1326	678	-	191	178	102	-	19	101	143062

4:1 Design Factor. ** Deformation Indicators. † Utilizes Crosby S319N style hook. Maximum proof load is 2 times the Working Load Limit. ‡ Utilizes Crosby G-2140 shackle as eye.

Copyright © 2023 The Crosby Group LLC All Rights Reserved

L-320R

- Hook identification code stamped on each hook.
- Quenched & Tempered.
- QUIC-CHECK® deformation and angle indicators forged on the hook.
- Fluorescent yellow finish for high subsea visibility.
- Tip extension allows for easy handling.
- Sizes 3.2t through 31.5t utilize new integrated latch (S-4320) that meets the world-class standard for lifting.
  - Heavy duty stamped latch interlocks with the hook tip.
  - High cycle, long life spring.
- Pad eyes are provided on either side of hook as cable guides. The cable is passed through a hole drilled in the latch that assists in allowing the remotely operated cable to open latch.
- Crosby supplies latches with drilled holes for sizes 5.4t through 31.5t. Other sizes can be fitted by your local authorized distributor. Cables are not provided by Crosby.

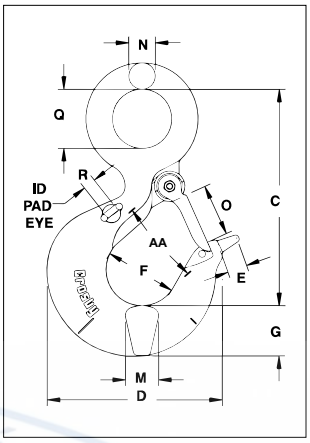

APPLICATION AND WARNING INFORMATION
SECTION 17

L-320R ROV Hooks

Working Load Limit (t)*	Hook ID Code	L-320R Stock No.	Weight Each (kg)	Dimensions (mm) C	D	E	F	G	M	N	O	Q	R	AA**	Replacement Latch Stock No.
†3.2	HA	1298427	1.01	119	101	25	41	29	24	15	28	32	6	50.8	1096468
†5.4	IA	1298497	2.04	147	122	25	51	37	33	18	35	40	6	63.5	1096515
†8	JA	1298567	3.92	187	159	35	64	46	42	23	41	51	10	76.2	1096562
†11.5	KA	1298637	7.02	230	189	35	76	57	41	28	53	62	10	102	1096611
†16	LA	1298707	10.1	256	211	35	83	66	49	32	58	72	10	102	1096657
†22	NA	1298777	18.4	318	262	45	108	76	60	40	77	89	19	127	1096704
†31.5	OA	1298847	28.1	357	346	-	127	92	76	44	93	89	19	165	1090161
37	PA	1298857	48.5	462	357	-	137	116	81	51	95	114	19	178	1090189
45	SA	1298867	62.1	511	392	-	152	129	82	55	114	125	19	203	1090189
60	TA	1298877	102	602	470	-	178	152	99	64	130	145	19	254	1090205

4:1 Design Factor. *Deformation Indicators. †Utilizes Crosby S320N style hook. Maximum proof load is 2 times the Working Load Limit.

Copyright © 2023 The Crosby Group LLC All Rights Reserved

Crosby

SAFER SOLUTIONS THAT WITHSTAND THE TOUGHEST ENVIRONMENTS

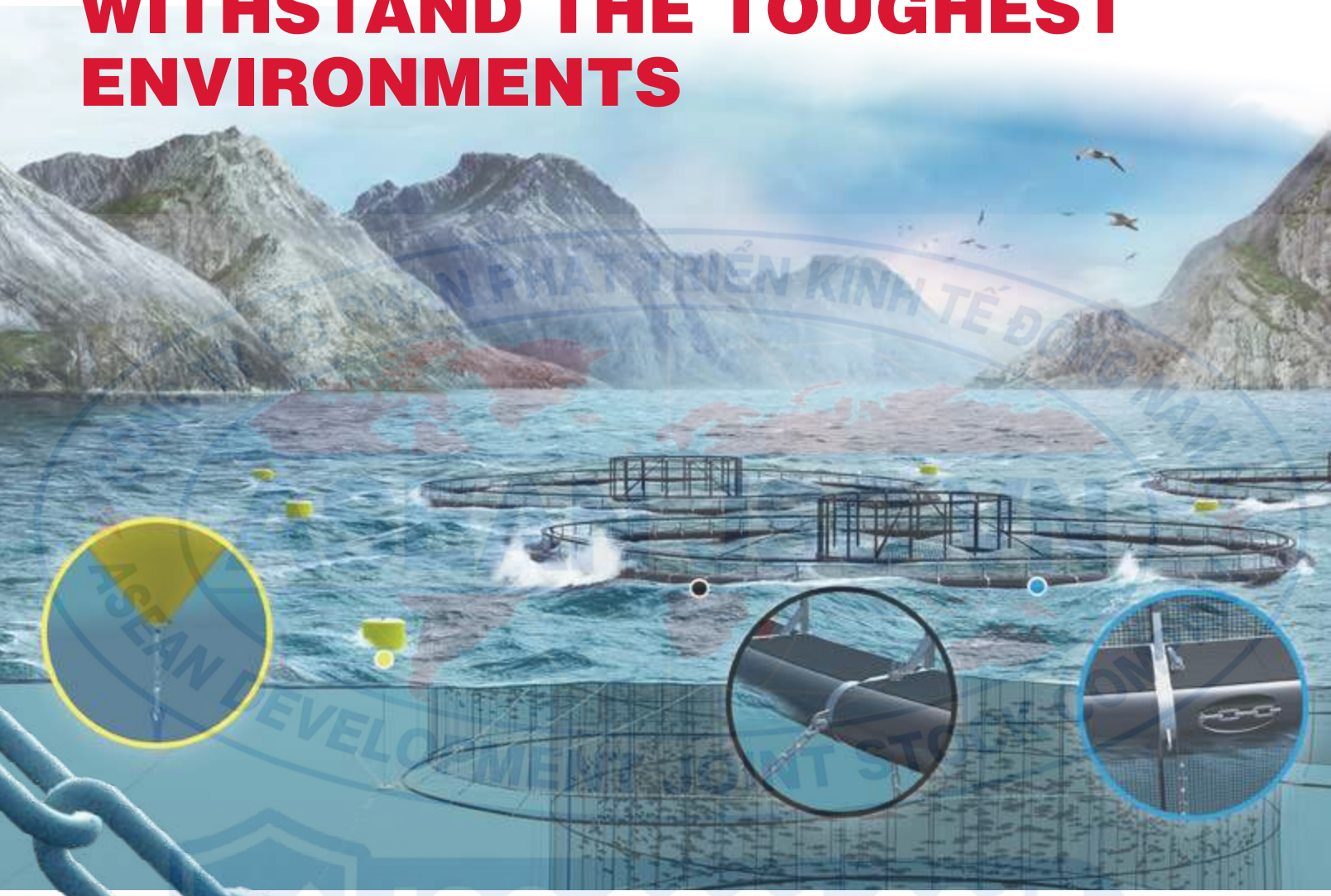

Increased safety & efficiency in aquaculture operations

Tackle the toughest environments with our wide range of products, including hot-dip galvanized welded chain slings and shackles.

Our products offer reduced corrosion and fatigue, are easier to handle, and are faster to assemble, resulting in longer product life and time and cost savings.

Gunnebo Industries Mooring Bolt, Countersunk Dee Shackle, and Long Link Chain LLZ

GUNNEBO Industries

Read more about our full aquaculture line, watch videos, and download the brochure at **thecrosbygroup.com/aquaculture**

SYNTHETIC SLING FITTINGS

Steel end fittings designed to be used on synthetic web slings to increase usability & durability.

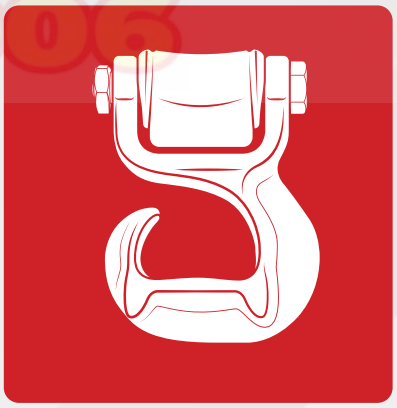

ASEAN JSC.VN
ASEAN DEVELOPMENT JOINT STOCK COMPANY
ISO 9001:2015
Since 2006

thecrosbygroup.com

Crosby

APPLICATION INFORMATION

Crosby's Sling Saver® line is the first broad line of fittings developed exclusively for use with synthetic slings. Combined with additional Crosby products, a complete system is now available.

RECOMMENDED APPLICATION CHART

APPLICATION	USE
Web slings, connect to pad eye, eye bolt, or lifting lug.	S-281 Sling Saver Web Sling Shackle
Web slings or roundslings, connecting to pad eye, eye bolt, or lifting lug.	S-253 or S-252 Sling Saver Shackle
Connect two S-252 or S-253 Sling Saver shackles together.	S-256 Link Plate
To keep the load centered on the pin, thus keeping the sling positioned correctly in the shackle bow.	S-255 Spool
Web slings or roundslings connecting to master links, rings, or Crosby 320N Eye Hooks.	S-280 Sling Saver Web Connector with spool
High strength, high capacity web or roundslings.	WSL-320A Synthetic Sling Hook
Choking with web slings or roundslings.	S-287 Sliding Choker Hook
Master links or master link assembly to be sewn into eye of web sling or attached utilizing web connector.	Welded Master Link A-1343 and Master Link Assembly A-1346
Master links or master link assembly to be sewn into eye of web sling or attached utilizing web connector.	Welded Master Link A-342 and Master Link Assembly A-345
Connecting high performance slings to master links or eye hooks and to other high performance slings.	S-237 or S-238 High Performance Connectors
Wide body shackles greatly improve wearability of wire rope slings.	S/G-2160 Wide Body Bolt Type Shackles S/G-2169 Wide Body Screw Pin Shackles
Always ensure rated Working Load Limits are greater than the load placed on the fitting. Designed for use with Type III (eye & eye), Class 7, 2-ply webbing, and synthetic round slings. Also accommodates single ply and endless slings.	
Crosby Sling Saver hardware meets the requirements for minimum stock diameter or thickness and effective contact width shown in the recommended standard specification for synthetic polyester round slings by the Web Sling and Tie Down Association. WSTDA-RS1 (revised 2010).	

Copyright © 2023 The Crosby Group LLC All Rights Reserved

S-280

- Connects synthetic web and synthetic round slings to conventional Crosby hardware.
- All alloy construction.
- Durable vinyl cover that:
  - Protects sling at eye
  - Keeps sling positioned correctly on spool.
- Makes a field assembled bridle quick and easy.
- No retaining pin to snag sling material.
- Increased radius of spool gives wider sling bearing surface resulting in an increased area for load distribution, allowing better load distribution on internal fibers.
- Increases synthetic sling efficiency as compared to standard anchor and chain shackle bows and conventional eye hooks. This allows 100% of the slings rated Working Load Limit to be achieved.
- Crosby Sling Saver hardware meets the requirements for minimum stock diameter or thickness, and effective contact width shown in the Recommended Standards Specification for Synthetic Polyester Round Slings by the Web Sling & Tie Down Association (WSTDA-RS1).
- Replacement kit for spool and web cover available.
- Designed for use with Type III (eye & eye), Class 7, 2-ply webbing and synthetic round slings. Also accommodates single ply and endless slings.

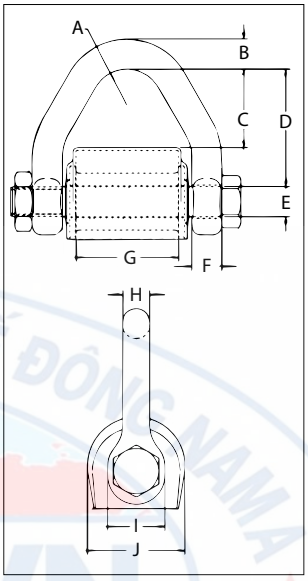

S-280 Web Connector

Round Sling Size (No.)	Web Slings* Webbing Width (mm)	Web Slings* Eye Width (mm)	Web Slings* Ply	Working Load Limit (t)†	S-280 Stock No.	Weight Each (kg)	Dimensions (mm) A	B	C	D	E	F	G	H	I	J
1 & 2	50	50	2	2.95	1021681	.68	19.1	15.7	41.4	62.0	16.0	15.7	68.5	14.2	30.2	51.5
3	35	75	2	4.08	1021690	.86	19.1	17.5	27.9	51.0	19.1	17.5	55.5	15.2	35.1	59.5
4	50	100	2	5.67	1021700	1.32	19.1	20.6	42.2	65.0	22.4	19.1	68.5	17.5	41.1	62.5
5 & 6	75	150	2	7.70	1021709	2.31	25.4	23.9	62.5	89.0	25.4	22.4	93.5	22.4	47.8	72.0

Design Factor of 5:1.
* Designed for use with Type III, (eye & eye), Class 7, 2-ply web slings. For 35mm and larger webbing width, tapered eye is required.
† Maximum Proof Load is 2 times the Working Load Limit.

Copyright © 2023 The Crosby Group LLC All Rights Reserved

Crosby

S-281

- Web Sling Shackle is designed to connect synthetic web slings and synthetic round slings to eyebolts, pad eyes, and lifting lugs.
- All alloy construction.
- Each shackle has a Product Identification Code (PIC) for material traceability along with a Working Load Limit and the name Crosby forged into it.
- Incorporates the same ear spread and pin dimensions as conventional Crosby shackles. Allows easy connection to pad eyes, eye bolts, and lifting lugs.
- Meets or exceeds all requirements of ASME B30.26, including identification, ductility, design factor, proof load, and temperature requirements. Importantly, these shackles meet other critical performance requirements, including fatigue life, impact properties, and material traceability not addressed by ASME B30.26.
- Crosby Sling Saver hardware meets the requirements for minimum stock diameter or thickness, and effective contact width shown in the Recommended Standards Specification for Synthetic Polyester Round Slings by the Web Sling & Tie Down Association (WSTDA-RS1).
- Look for the Red Pin®... The mark of genuine Crosby quality.

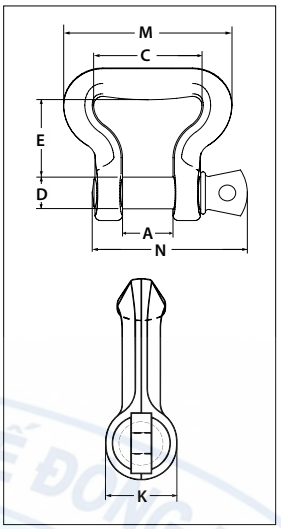

CE Sling Saver Load Tested Q&T

S-281 Web Sling Shackle

Round Sling Size (No.)	Web Slings* Webbing Width (mm)	Web Slings* Eye Width (mm)	Web Slings* Ply	Working Load Limit (t)†	S-281 Stock No.	Weight Each (kg)	Dimensions (mm) A	C	D	E	K	M	N
1 & 2	50	50	2	2.95	1021048	.54	26.9	63.5	19.1	41.1	31.0	97.5	85.0
3	35	75	2	4.08	1021057	.68	31.8	51.0	22.4	38.1	35.8	86.0	101
4	50	100	2	5.67	1021066	1.13	36.6	63.5	25.4	51.0	41.1	107	114
5 & 6	75	150	2	7.70	1021075	1.95	42.9	92.0	28.7	70.0	46.7	143	130

Design Factor of 5:1.
*Designed for use with Type III, (eye & eye), Class 7, 2-ply web slings. For 35mm and larger webbing width, tapered eye is required.
† Maximum Proof Load is 2 times the Working Load Limit.

ASEAN JSC.VN
ISO 9001:2015
Since 2006

Copyright © 2023 The Crosby Group LLC All Rights Reserved

S-252

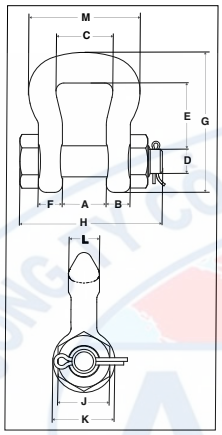

- All alloy construction.
- Each shackle has a Product Identification Code (PIC) for material traceability along with a Working Load Limit and the name Crosby forged into it.
- Increased radius of bow gives wider sling bearing surface resulting in an increased area for load distribution, allows better load distribution on internal fibers.
  - Increasing Synthetic Sling efficiency as compared to standard anchor and chain shackle bows and conventional hooks. This allows 100% of the sling's rated Working Load Limit to be achieved.
- Meets or exceeds all requirements of ASME B30.26, including identification, ductility, design factor, proof load, and temperature requirements. Importantly, these shackles meet other critical performance requirements, including fatigue life, impact properties, and material traceability not addressed by ASME B30.26.
- Crosby Sling Saver hardware meets the requirements for minimum stock diameter or thickness, and effective contact width shown in the Recommended Standards Specification for Synthetic Polyester Round Slings by the Web Sling & Tie Down Association (WSTDA-RS1).
- Bolt (pin) has a larger diameter that provides better load distribution.
- Look for the Red Pin®... the mark of genuine Crosby quality.

S-253

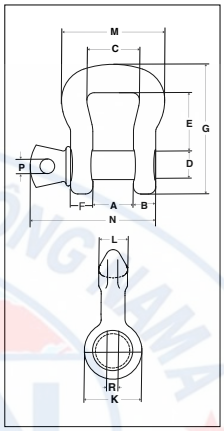

CE Sling Saver Fatigue Rated Load Rated QT

S-252 Bolt Type Sling Shackle

Web Sling Eye Width (mm)	Round Sling Size (No.)	Working Load Limit (t)*	S-252 Stock No.	Weight Each (kg)	Dimensions (mm)											
					A	B	C	D	E	F	G	H	J	K	L	M
25	1 & 2	3.25	1020485	.64	26.9	14.7	35.1	19.1	38.1	11.2	86.0	93.5	28.4	38.1	19.1	68.5
35	3 & 4	6.5	1020496	1.09	31.8	19.1	44.5	22.4	47.8	12.7	105	108	33.3	46.0	25.4	86.0
50	5 & 6	8.75	1020507	1.86	35.1	22.4	57.0	25.4	71.5	14.2	140	120	38.1	53.0	28.4	106
75	7 & 8	12.5	1020518	3.63	41.1	28.4	82.5	31.8	77.5	19.1	161	149	47.8	66.5	35.1	143
100	9 & 10	20.5	1020529	7.67	54.0	35.1	114	38.1	133	22.4	240	183	57.0	79.0	44.5	191
125	11 & 12	35	1020540	15.9	63.5	44.5	140	51.0	161	28.4	292	236	76.0	106	57.0	233
150	13	50	1020551	26.1	76.0	54.0	165	57.0	196	31.8	349	264	86.0	121	70.0	279

Design factor of 5:1.
* Maximum Proof Load is 2.5 times the Working Load Limit.

S-253 Screw Pin Sling Shackle

Web Sling Eye Width (mm)	Round Sling Size (No.)	Working Load Limit (t)*	S-253 Stock No.	Weight Each (kg)	Dimensions (mm)											
					A	B	C	D	E	G	K	L	M	N	P	R
25	1 & 2	3.25	1020575	.64	22.4	15.7	35.1	19.1	38.1	86.0	38.1	19.1	68.5	82.0	11.2	25.4
35	3 & 4	6.5	1020584	1.00	31.8	19.1	44.5	22.4	47.8	105	46.0	25.4	86.0	102	12.7	30.2
50	5 & 6	8.75	1020593	1.72	35.1	22.4	57.0	25.4	71.5	140	53.0	28.4	106	114	12.7	36.6
75	7 & 8	12.5	1020602	3.31	41.1	28.4	82.5	31.8	77.5	161	66.5	35.1	143	142	15.7	46.0
100	9 & 10	20.5	1020611	6.89	54.0	35.1	114	38.1	133	240	79.0	44.5	191	175	19.1	54.0
125	11 & 12	35	1020620	14.0	63.5	44.5	140	51.0	161	292	106	57.0	233	220	25.4	73.0
150	13	50	1020629	23.6	76.0	54.0	165	57.0	196	349	121	70.0	279	260	31.0	81.0

* Maximum Proof Load is 2.5 times the Working Load Limit.

Copyright © 2023 The Crosby Group LLC All Rights Reserved

Crosby

S-255

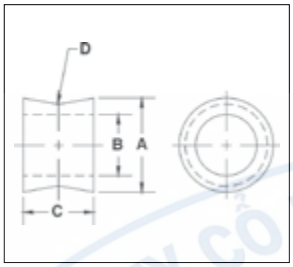

S-255 Spool

- Designed to keep the load centered on the pin, which keeps the sling positioned correctly in the shackle bow.

Working Load Limit (t)	S-255 Stock No.	Weight Each (kg)	Dimensions (mm)			
			A	B	C	D
3.25	1020903	0.15	31.8	20.6	19.1	4.85
6.5	1020912	0.26	38.1	23.9	25.4	6.35
8.75	1020921	0.40	44.5	26.7	30.2	7.85
12.5	1020930	0.66	51.0	33.3	38.1	9.65
20.5	1020939	1.27	63.5	41.4	47.8	11.2
35	1020948	1.09	82.5	54.0	57.0	12.7
50	1020957	1.84	95.5	60.5	70.0	15.7

* 5:1 Design Factor

CE

S-256

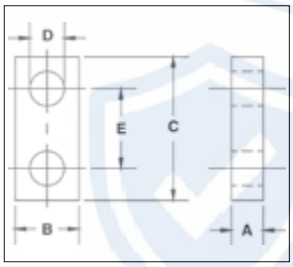

S-256 Link Plate

- Designed to connect two (2) S-252 or S-253 Sling Saver Shackles together.

Working Load Limit (t)	S-256 Stock No.	Weight Each (kg)	Dimensions (mm)				
			A	B	C	D	E
3.25	1020785	.38	19.1	38.1	86.0	20.6	47.8
6.5	1020796	.73	25.4	44.5	105	23.9	57.0
8.75	1020807	1.23	31.8	51.0	121	26.9	66.5
12.5	1020818	2.35	38.1	63.5	152	33.3	85.6
20.5	1020829	3.71	44.5	76.0	178	41.1	95.5
35	1020840	7.80	51.0	102	235	54.0	127
50	1020851	17.0	73.1	127	267	60.5	146

* 5:1 Design Factor

Sling Saver CE

CÔNG TY CỔ PHẦN PHÁT TRIỂN KINH TẾ ĐÔNG NAM Á
ASEAN ISC VN
ASEAN DEVELOPMENT JOINT STOCK COMPANY
ISO 9001:2015
Since 2006

Copyright © 2023 The Crosby Group LLC All Rights Reserved

WSL-320A

- Suitable for use with 2-ply web slings and round slings.
  - Eye is designed with a wide beam surface, which eliminates bunching effects, reduces sling tendency to slide, and allows a better load distribution on internal fibers.
- All alloy construction.
- Each hook has a Product Identification Code (PIC) for material traceability along with a working load limit and the name Crosby forged into it.
- All hooks feature Crosby's patented QUIC-CHECK® indicators.
- Fatigue rated to 20,000 cycles at 1.5 times the Working Load Limit.
- Includes S-4320 latch.
- Crosby Sling Saver hardware meets the requirements for minimum stock diameter or thickness, and effective contact width shown in the Recommended Standards Specification for Synthetic Polyester Round Slings by the Web Sling & Tie Down Association (WSTDA-RS1).

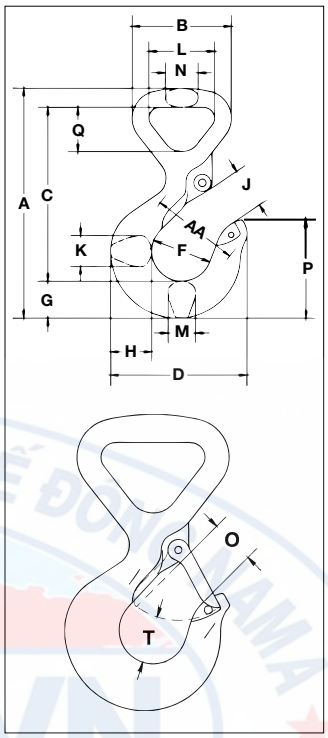

APPLICATION AND WARNING INFORMATION
SECTION 17

WSL-320A Synthetic Sling Hook

Web Sling Eye Width (mm)	Round Sling Size (No.)	Working Load Limit (t)	WSL-320A with Latch	Weight Each (kg)	Hook I.D. Code	S-4320 Rep. Latch
25.0	1	1.5	1022706	.50	FA	1096374
50.0	2	3	1022717	1.30	HA	1096468
75.0	3	5	1022728	3.00	IA	1096515

Hook ID Code	Working Load Limit (t)	Dimensions (mm)																
		A	B	C	D	F	G	H	J	K	L	M	N	O	P	Q	T	AA
FA	1.5	133	57.5	101	79.0	35.1	21.3	23.9	23.6	18.0	38.1	16.0	19.1	23.1	57.0	25.7	24.9	51.0
HA	3	181	93.0	135	101	41.4	28.7	33.5	28.7	23.9	63.5	21.6	28.7	27.7	71.5	42.9	29.5	51.0
IA	5	237	130	179	122	51.0	36.6	41.4	37.3	33.3	95.5	28.7	41.4	34.5	89.0	66.0	38.9	63.5

Design factor of 5:1.
Maximum Proof Load is 2.5 times the Working Load Limit.

Copyright © 2023 The Crosby Group LLC All Rights Reserved

Crosby

S-287

- Special design of hook protects the synthetic sling when dropped or dragged.
- Uses same spool and cover as S-280 Web Connector.
  - Replacement Kit for Spool and Web Cover available.
  - No retaining pin to snag sling material.
- Forged alloy steel, Quenched & Tempered.
- Each Connector has a Product Identification Code (PIC) for material traceability along with a Working Load Limit and the name Crosby forged into it.
- Designed to reduce friction, abrasion, and fraying in choker area.
- Designed for use with Type III, (eye & eye).
- Crosby Sling Saver hardware meets the requirements for minimum stock diameter or thickness, and effective contact width shown in the Recommended Standards Specification for Synthetic Polyester Round Slings by the Web Sling & Tie Down Association (WSTDA-RS1).

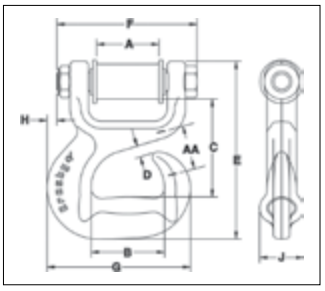

S-287 Sliding Choker Hook

Round Sling Size (No.)	Web Slings: Webbing Width (mm)	Web Slings: Eye Width (mm)	Web Slings: Ply	Working Load Limit (t)	S-287 Stock No.	Weight Each (kg)	Dimensions (mm): A	B	C	D	E	F	G	H	J	AA
1 & 2	50	50	2	2.95	1021909	1.68	54.0	63.5	84.5	9.65	153	121	124	8.65	38.1	38.1
3	75	35	2	4.08	1021918	2.77	41.4	89.0	93.0	9.65	179	115	165	34.5	47.8	–

Design factor of 5:1.
Maximum Proof Load is 2 times the Working Load Limit.

CÔNG TY CỔ PHẦN ASEAN DEVELOPMENT JOINT STOCK COMPANY
ISO 9001:2015
Since 2006

Copyright © 2023 The Crosby Group LLC All Rights Reserved

S-237

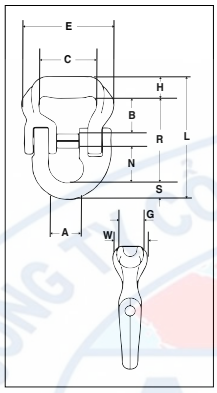

- High Performance Sling Connector is designed to connect to slings of all materials.
- Allows easy connection to master links or eye hooks and is ideal for bridles.
- Increased radius of bow gives wider sling bearing surface resulting in an increased area for load distribution, allows better load distribution on internal fibers.
  - Increases synthetic sling efficiency as compared to master links, shackle bows and conventional eye hooks. This allows 100% of the sling's rated Working Load Limit to be achieved.
- All alloy construction
- Each connector has a Product Identification Code (PIC) for material traceability, along with a frame size and the name Crosby forged into it.
- Crosby Sling Saver hardware meets the requirements for minimum stock diameter or thickness, and effective contact width shown in the Recommended Standards Specification for Synthetic Polyester Round Slings by the Web Sling & Tie Down Association (WSTDA-RS1).

S-238

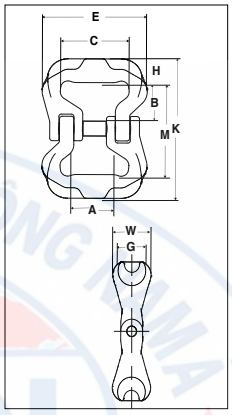

S-237 High Performance Sling Connector

Working Load Limit 4:1 (kg)*	Working Load Limit 5:1 (kg)	Stock No.	Frame No.	Nominal Sling Body Width (mm)	Lok-A-Loy Size (mm)	Weight Each (kg)	Dimensions (mm) A	B	C	E	G	H	L	N	R	S	W
2835	2268	1020695	5	51	10	.52	22.4	36.1	50.8	80.8	25.4	20.3	107	26.4	74.2	12.2	35.1
5670	4536	1020704	10	76	16	1.34	36.1	38.6	69.9	105	31.8	24.9	144	43.4	100	19.0	44.5
8505	6804	1020713	15	76	20	2.15	41.4	40.1	69.9	111	35.1	27.9	165	51.8	113	23.6	47.8
14175	11340	1020722	25	102	22	3.90	50.8	59.2	95.3	152	44.5	35.8	202	57.7	140	26.9	57.2
17010	13607	1020731	30	102	22	4.19	50.8	55.9	95.3	157	44.5	35.8	199	57.7	137	26.9	60.5
22680	18145	1020740	40	127	26	7.1	57.2	73.9	121	184	57.2	45.2	240	62.0	164	31.0	78.5
34020	27215	1020759	60	152	32	11.8	65.0	85.3	146	232	58.7	47.2	281	78.0	196	38.1	80.3

Design Factor of 5:1.
Maximum allowable Proof Load is 2 times the Working Load Limit when used at 4:1 design factor.

S-238 High Performance Sling Connector

Working Load Limit (kg)	Stock No.	Frame No.	Nominal Sling Body Width (mm)	Weight Each (kg)	Dimensions (mm) A	B	C	E	G	H	K	M	W
2268	1020415	5	50.8	.73	22.4	36.1	50.8	80.8	25.4	20.3	124	83.8	35.1
4536	1020423	10	76.2	1.50	36.1	38.6	69.9	105	31.8	24.9	145	95.5	44.5
6804	1020432	15	76.2	2.22	41.4	40.1	69.9	111	35.1	27.9	156	101	47.8
11340	1020441	25	102	4.58	50.8	59.2	95.3	152	44.5	35.8	213	142	57.2
13608	1020450	30	102	5.17	50.8	55.9	95.3	157	44.5	35.8	207	135	60.5
18144	1020469	40	127	9.39	57.2	73.9	121	184	57.2	45.2	266	176	78.5
27216	1020478	60	152	14.5	65.0	85.3	146	232	58.7	47.2	298	203	80.3

5:1 Design Factor

Copyright © 2023 The Crosby Group LLC All Rights Reserved

GUNNEBO Industries

Roundsling Hook RH

The RH-hook is the perfect load connection solution, combining the advantages of both soft lifting slings and grade 100 components. It can be inserted into a softsling and is quicker and safer to use than the commonly used shackle. The RH-hook is a connector as well as a hook, which gives the user increased flexibility, safer use and increased durability of the soft slings.

The RH-hook comes with a blocking pin, but thanks to the narrow opening it may be used without blocking pin.

CE

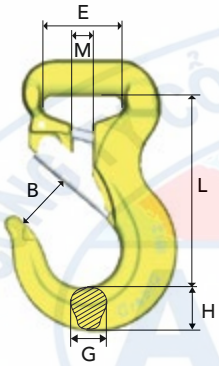

Stock No.	Code	WLL (t)	Dimensions (mm)						Weight (kg)
			B	E	G	L	H	M	
B14490	RH-1-10	1	24	35	17	84	19	8	0.5
B14491	RH-2-10	2	28	40	17	96	22	10	0.7
B14492	RH-3-10	3	33	47	24	117	30	12	1.4
B14493	RH-5-10	5	43	73	27	155	36	17	3.2

4:1 Design Factor. Tested according to EN 1677-2.

The roundsling hooks are color coded in order to match the corresponding sizes of roundslings marked according to EN 1492: Red=5T, Yellow=3T, Green=2T and Violet=1T.

ASEAN JSC.VN
ASEAN DEVELOPMENT JOINT STOCK COMPANY
ISO 9001:2015
Since 2006

Copyright © 2023 The Crosby Group LLC All Rights Reserved

The SK-System

A range of specialized components for safe and easy assembly to chain, steel wire rope, webbing and roundsling, designed to solve your below-the-hook problems.

The Polyester Sling System provides:

- Universal coupling of components to chain, wire and synthetic slings.
- Quick and simple assembly (only a hammer needed).
- Easy assembly - standardized dimensions within each size range effectively eliminates the incorrect assembly of components with different safe working loads.
- Heavy hoisting with strong yet lightweight equipment.
- All components are manufactured from alloy steel for use with Grade 8 chain.

SKA – pin & collar

The SKA set, containing pin and collar, can be used to connect all products in the SK-range. This creates a multitude of available combinations, each adaptable to the unique lifting situation.

The SKA set gives you flexibility. It can be disassembled and put in new combinations, providing solutions for a versatile lifting environment.

SKLI/SKLU

Electrically insulated, lubricated, sealed roller bearing swivel. Fully rotational even at maximum load. Tested to resist 1000 V. Suitable for protection of overhead cranes during welding operations on suspended loads.

By using the SKLI/SKLU with the SK-system you get a versatile solution that will fit almost any situation.

Copyright © 2023 The Crosby Group LLC All Rights Reserved

Rapid Rescue Chain Kit

Rapid rescue chain kits for a quick and patient-friendly rescue.

Rapid Rescue Chain Kits

A few seconds can make a significant impact in a serious accident rescue operation. The vehicle construction and extreme deformations common in accidents make the work of emergency workers increasingly more difficult. The use of Gunnebo Industries' chain rescue kit is simple and effective for a patient-friendly rescue. The methodology and equipment is standardized in many parts of Europe including Germany and Scandinavia. The pulling moves the fire brigade's working space to the outside and allows parallel work of medical care and technical rescue.

Chain rescue can be used successfully in various accident scenarios such as frontal impact, side and rear impact.

Recommended kit

- 4 x 2,7m (9ft) chain sling MG1-CL
- 2 x 6m (20ft) synthetic sling*
- 4 x RH synthetic sling hooks
- 4 x G209 or 854 bow screw pin shackles
- 2 x metal or plastic hardcase for easy storage*

*not manufactured by The Crosby Group

The kits are available in sizes from 6mm (7/32 inch) up to 16mm (5/8 inch) and working load limits up to 10 t (22 600 lb). Most commonly 8mm (5/16 inch) or 10mm (3/8 inch) are used, along with appropriately sized synthetic slings and synthetic sling hooks.

GUNNEBO Industries

Copyright © 2022 The Crosby Group LLC All Rights Reserved

TURNBUCKLES

Drop-forged and hot-dip galvanized turnbuckles for in-line pull.

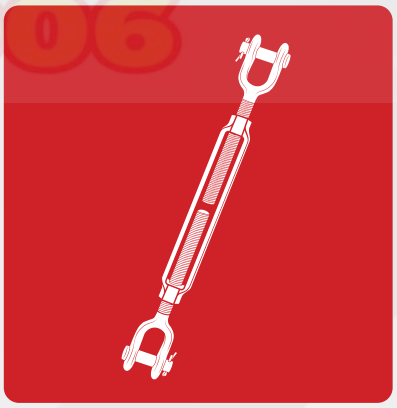

ASEAN JSC.VN
ASEAN DEVELOPMENT JOINT STOCK COMPANY
ISO 9001:2015
Since 2006

the Crosby group
thecrosbygroup.com

Crosby

HG-223

HOOK & HOOK
Meets the performance requirements of Federal Specifications FF-T-791b, Type 1, Form 1, Class 5, and ASTM F-1145, except for those provisions required of the contractor.

HG-226

EYE & EYE
Meets the performance requirements of Federal Specifications FF-T-791b, Type 1, Form 1, Class 4, and ASTM F-1145, except for those provisions required of the contractor.

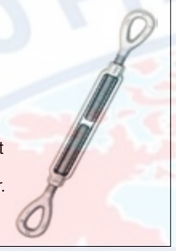

Modified Thread:
Note stress relieving radii in this unretouched photo enlargement of the supabuckle.

HG-227

JAW & EYE
Meets the performance requirements of Federal Specifications FF-T-791b, Type 1, Form 1, Class 8, and ASTM F-1145, except for those provisions required of the contractor.

HG-228

JAW & JAW
Meets the performance requirements of Federal Specifications FF-T-791b, Type 1, Form 1, Class 7, and ASTM F-1145, except for those provisions required of the contractor.

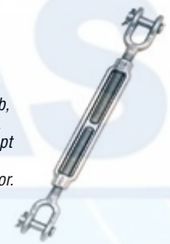

Standard Thread:
Note stress building sharp "V" in this untouched photo enlargement.

Turnbuckle Information

- Turnbuckle assembly combinations include: eye & eye, hook & hook, jaw & jaw, and jaw & eye.
- End fittings are Quenched & Tempered or normalized, bodies heat treated by normalizing.
- Crosby's Quenched & Tempered end fittings and normalized bodies have enhanced impact properties for greater toughness at all temperatures.
- Hot-dip galvanized.
- Hooks are forged with a greater cross sectional area that results in a stronger hook with better fatigue properties.
- Modified UNJ thread on end fittings for improved fatigue properties. Body has UNC threads.
- Turnbuckle eyes are forged elongated, by design, to maximize easy attachment in system and minimize stress in the eye. For turnbuckle sizes 6.35mm through 63.5mm, a shackle one size smaller can be reeved through eye.
- Forged jaw ends are fitted with bolts and nuts on size 6.35mm - 15.9mm, and pins and cotter on sizes 19.1mm through 70mm.
- Can be used in general service conditions down to temperatures of -40° F (-40° C) and up to 400° F (204° C). See page 3 for more details.
- **TURNBUCKLES RECOMMENDED FOR STRAIGHT OR IN-LINE PULL ONLY.**
- Lock nuts available for all sizes.
- Typical hardness levels, tensile strengths and ductility properties are available for all sizes.
- Meets or exceeds all the requirements of ASME B30.26 including identification, ductility, design factor, proof load and temperature requirements. Importantly, these turnbuckles meet other critical performance requirements, including fatigue life, impact properties and material traceability, not addressed by ASME B30.26.

Copyright © 2023 The Crosby Group LLC All Rights Reserved

Crosby

TURNBUCKLES

HG-226

Q&T

Fatigue Rated

APPLICATION AND WARNING INFORMATION
SECTION 17

- End fittings are Quenched & Tempered or normalized, bodies heat-treated by normalizing.
- Hot-dip galvanized steel.
- Turnbuckle eyes are forged elongated, by design, to maximize easy attachment in system and minimize stress in the eye. For turnbuckle sizes 6 mm through 64 mm, a shackle one size smaller can be reeved through eye.
- Modified UNJ thread on end fittings for improved fatigue properties. Body has UNC threads.
- TURNBUCKLES RECOMMENDED FOR STRAIGHT OR IN-LINE PULL ONLY.
- Lock nuts available for all sizes.
- Fatigue rated to 20,000 cycles at 1-1/2 times the Working Load Limit.
- Meets or exceeds all requirements of ASME B30.26 including identification, ductility, design factor, proof load, and temperature requirements. Importantly, these turnbuckles meet other critical performance requirements including fatigue life, impact properties, and material traceability, not addressed by ASME B30.26.
- Meets the performance requirements of Federal Specifications FF-T-791b, Type 1 Form 1 - CLASS 4, and ASTM F-1145, except for those provisions required of the contractor. For additional information, see the warnings and applications section.

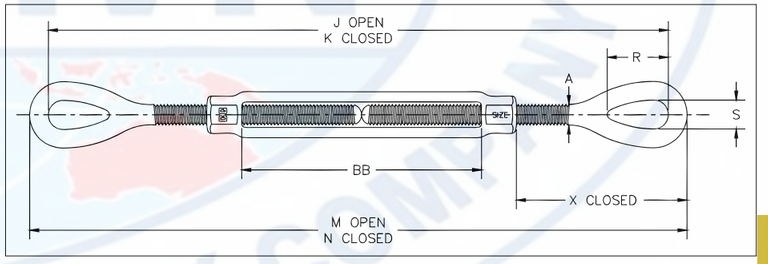

HG-226 Eye & Eye

Thread Dia. & Take Up (in)	Stock No.	Working Load Limit (t)	Weight Each (kg)	Dimensions (mm) A	J Open	K Closed	M Open	N Closed	R	S	X Closed	BB
* 5/16 x 4-1/2	1031270	.36	.22	7.94	354	239	368	253	24.1	11.2	55.8	116
* 3/8 x 6	1031298	.54	.34	9.53	446	294	463	311	28.7	13.5	62.9	155
1/2 x 6	1031314	1.00	.78	12.7	506	354	529	376	35.8	18.0	90.4	153
1/2 x 12	1031350	1.00	1.19	12.7	819	514	841	536	35.8	18.0	89.9	314
5/8 x 6	1031378	1.59	1.25	15.9	552	399	577	425	45.7	22.4	110	153
5/8 x 12	1031412	1.59	1.87	15.9	865	560	891	586	45.7	22.4	110	315
3/4 x 6	1031430	2.36	1.91	19.1	590	438	622	470	53.1	25.4	130	156
3/4 x 12	1031476	2.36	2.78	19.1	905	600	937	632	53.1	25.4	129	320
3/4 x 18	1031494	2.36	3.55	19.1	1210	753	1242	785	53.1	25.4	130	471
7/8 x 12	1031519	3.27	4.01	22.2	932	627	970	665	60.5	31.8	147	309
7/8 x 18	1031537	3.27	5.22	22.2	1249	792	1287	830	60.5	31.8	147	473
1 x 6	1031555	4.54	4.36	25.4	666	514	711	559	76.2	36.3	165	157
1 x 12	1031573	4.54	5.88	25.4	971	666	1016	711	76.2	36.3	165	309
1 x 18	1031591	4.54	7.40	25.4	1276	819	1321	864	76.2	36.3	165	462
1 x 24	1031617	4.54	9.14	25.4	1596	987	1641	1031	76.2	36.3	164	631
1-1/4 x 12	1031635	6.89	9.01	31.8	1070	766	1127	822	91.2	46.2	216	306
1-1/4 x 18	1031653	6.89	10.8	31.8	1375	918	1432	975	91.2	46.2	216	459
1-1/4 x 24	1031671	6.89	12.6	31.8	1694	1085	1751	1141	91.2	46.2	216	625
1-1/2 x 12	1031699	9.71	13.0	38.1	1124	819	1187	882	104	53.8	240	313
1-1/2 x 18	1031715	9.71	15.4	38.1	1428	971	1492	1035	104	53.8	240	465
1-1/2 x 24	1031733	9.71	17.9	38.1	1749	1139	1813	1203	104	53.8	240	633
1-3/4 x 18	1031779	12.7	23.0	44.5	1457	1000	1534	1076	118	60.5	253	467
1-3/4 x 24	1031797	12.7	26.4	44.5	1762	1153	1838	1229	118	60.5	253	619
2 x 24	1031813	16.8	37.9	50.8	1922	1313	2011	1402	148	68.3	331	622
2-1/2 x 24	1031831	27.2	67.4	63.5	2011	1402	2113	1503	165	79.2	350	625
2-3/4 x 24	1031859	34.0	79.1	69.9	2066	1456	2180	1571	178	82.6	383	626

5:1 Design Factor. Proof Load is 2.5 times the Working Load Limit. *Mechanical galvanized

Copyright © 2023 The Crosby Group LLC All Rights Reserved

HG-226

- End fittings are Quenched & Tempered or normalized, bodies heat-treated by normalizing.
- Hot-dip galvanized steel.
- Turnbuckle eyes are forged elongated, by design, to maximize easy attachment in system and minimize stress in the eye. For turnbuckle sizes 6 mm through 64 mm, a shackle one size smaller can be reeved through eye.
- Modified UNJ thread on end fittings for improved fatigue properties. Body has UNC threads.
- TURNBUCKLES RECOMMENDED FOR STRAIGHT OR IN-LINE PULL ONLY.
- Lock nuts available for all sizes.
- Fatigue rated to 20,000 cycles at 1-1/2 times the Working Load Limit.
- Meets or exceeds all requirements of ASME B30.26 including identification, ductility, design factor, proof load, and temperature requirements. Importantly, these turnbuckles meet other critical performance requirements including fatigue life, impact properties, and material traceability, not addressed by ASME B30.26.
- Meets the performance requirements of Federal Specifications FF-T-791b, Type 1 Form 1 - CLASS 4, and ASTM F-1145, except for those provisions required of the contractor. For additional information, see the warnings and applications section.

Q&T

Fatigue Rated

APPLICATION AND WARNING INFORMATION
SECTION 17

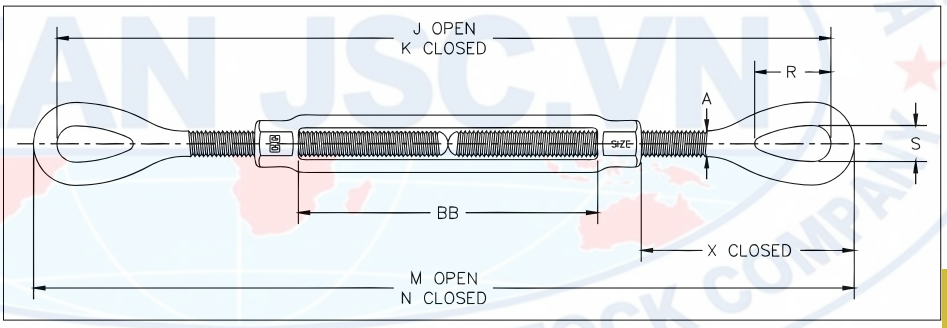

HG-226 Eye & Eye

Thread Dia. & Take Up (in)	Stock No.	Working Load Limit (t)	Weight Each (kg)	Dimensions (mm) A	J Open	K Closed	M Open	N Closed	R	S	X Closed	BB
* 5/16 x 4-1/2	1031270	.36	.22	7.94	354	239	368	253	24.1	11.2	55.8	116
* 3/8 x 6	1031298	.54	.34	9.53	446	294	463	311	28.7	13.5	62.9	155
1/2 x 6	1031314	1.00	.78	12.7	506	354	529	376	35.8	18.0	90.4	153
1/2 x 12	1031350	1.00	1.19	12.7	819	514	841	536	35.8	18.0	89.9	314
5/8 x 6	1031378	1.59	1.25	15.9	552	399	577	425	45.7	22.4	110	153
5/8 x 12	1031412	1.59	1.87	15.9	865	560	891	586	45.7	22.4	110	315
3/4 x 6	1031430	2.36	1.91	19.1	590	438	622	470	53.1	25.4	130	156
3/4 x 12	1031476	2.36	2.78	19.1	905	600	937	632	53.1	25.4	129	320
3/4 x 18	1031494	2.36	3.55	19.1	1210	753	1242	785	53.1	25.4	130	471
7/8 x 12	1031519	3.27	4.01	22.2	932	627	970	665	60.5	31.8	147	309
7/8 x 18	1031537	3.27	5.22	22.2	1249	792	1287	830	60.5	31.8	147	473
1 x 6	1031555	4.54	4.36	25.4	666	514	711	559	76.2	36.3	165	157
1 x 12	1031573	4.54	5.88	25.4	971	666	1016	711	76.2	36.3	165	309
1 x 18	1031591	4.54	7.40	25.4	1276	819	1321	864	76.2	36.3	165	462
1 x 24	1031617	4.54	9.14	25.4	1596	987	1641	1031	76.2	36.3	164	631
1-1/4 x 12	1031635	6.89	9.01	31.8	1070	766	1127	822	91.2	46.2	216	306
1-1/4 x 18	1031653	6.89	10.8	31.8	1375	918	1432	975	91.2	46.2	216	459
1-1/4 x 24	1031671	6.89	12.6	31.8	1694	1085	1751	1141	91.2	46.2	216	625
1-1/2 x 12	1031699	9.71	13.0	38.1	1124	819	1187	882	104	53.8	240	313
1-1/2 x 18	1031715	9.71	15.4	38.1	1428	971	1492	1035	104	53.8	240	465
1-1/2 x 24	1031733	9.71	17.9	38.1	1749	1139	1813	1203	104	53.8	240	633
1-3/4 x 18	1031779	12.7	23.0	44.5	1457	1000	1534	1076	118	60.5	253	467
1-3/4 x 24	1031797	12.7	26.4	44.5	1762	1153	1838	1229	118	60.5	253	619
2 x 24	1031813	16.8	37.9	50.8	1922	1313	2011	1402	148	68.3	331	622
2-1/2 x 24	1031831	27.2	67.4	63.5	2011	1402	2113	1503	165	79.2	350	625
2-3/4 x 24	1031859	34.0	79.1	69.9	2066	1456	2180	1571	178	82.6	383	626

5:1 Design Factor. Proof Load is 2.5 times the Working Load Limit. *Mechanical galvanized

Copyright © 2023 The Crosby Group LLC All Rights Reserved

Crosby

HG-227

- End fittings are Quenched & Tempered or normalized, bodies heat-treated by normalizing.
- Hot-dip Galvanized steel.
- Turnbuckles eyes are forged and elongated, by design, to maximize easy attachment in system and minimize stress in the eye. For turnbuckles size 6 mm through 64 mm, a shackle one size smaller can be reeved through eye.
- Forged jaw ends are fitted with bolts and nuts for 6mm through 16mm, and pins and cotters on 19 mm through 70 mm sizes.
- Modified UNJ thread on end fittings for improved fatigue properties.
- Body has UNC threads.
- TURNBUCKLES RECOMMENDED FOR STRAIGHT OR IN-LINE PULL ONLY.
- Lock nuts available for all sizes.
- Fatigue rated to 20,000 cycles at 1-1/2 times the Working Load Limit.
- Meets or exceeds all requirements of ASME B30.26 including identification, ductility, design factor, proof load, and temperature requirements. Importantly, these turnbuckles meet other critical performance requirements including fatigue life, impact properties, and material traceability, not addressed by ASME B30.26.
- Meets the performance requirements of Federal Specifications FF-T-791b, Type 1 Form 1 - CLASS 8, and ASTM F-1145, except for those provisions required of the contractor. For additional information, see warnings and applications section.

Fatigue Rated

APPLICATION AND WARNING INFORMATION
SECTION 17

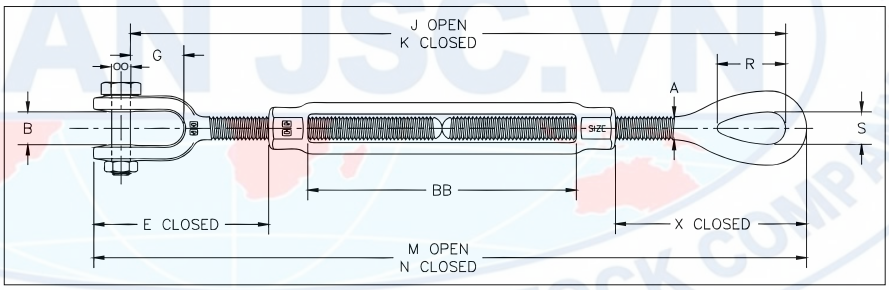

HG-227 Jaw & Eye

Thread Dia. & Take Up (in)	Stock No.	Working Load Limit (t)	Weight Each (kg)	Dimensions (mm)											
				A	B	E Closed	G	J Open	K Closed	M Open	N Closed	R	S	X Closed	BB
* 5/16 x 4-1/2	1031895	.36	.24	7.94	12.7	51.2	22.0	343	228	363	249	24.1	11.2	55.8	116
* 3/8 x 6	1031911	.54	.36	9.53	13.5	53.5	21.5	429	277	454	301	28.7	13.5	62.9	155
1/2 x 6	1031939	1.00	.80	12.7	16.3	81.8	27.1	490	338	520	368	35.8	18.0	90.4	153
1/2 x 9	1031957	1.00	1.02	12.7	16.3	81.3	27.1	650	421	680	451	35.8	18.0	89.9	238
1/2 x 12	1031975	1.00	1.21	12.7	16.3	81.3	27.1	802	497	832	528	35.8	18.0	89.9	314
5/8 x 6	1031993	1.59	1.35	15.9	20.1	99.1	33.5	527	374	566	413	45.7	22.4	110	153
5/8 x 9	1032019	1.59	1.69	15.9	20.1	98.8	33.5	688	459	727	498	45.7	22.4	110	239
5/8 x 12	1032037	1.59	1.97	15.9	20.1	98.8	33.5	840	535	879	574	45.7	22.4	110	315
3/4 x 6	1032055	2.36	2.05	19.1	24.6	120	38.5	563	411	612	459	53.1	25.4	130	156
3/4 x 9	1032073	2.36	2.52	19.1	24.6	119	38.5	726	497	774	546	53.1	25.4	129	244
3/4 x 12	1032091	2.36	2.91	19.1	24.6	119	38.5	878	573	927	622	53.1	25.4	129	320
3/4 x 18	1032117	2.36	3.69	19.1	24.6	120	38.5	1183	726	1232	774	53.1	25.4	130	471
7/8 x 12	1032135	3.27	4.13	22.2	29.5	140	44.8	906	601	963	658	60.5	31.8	147	309
7/8 x 18	1032153	3.27	5.28	22.2	29.5	140	44.8	1223	766	1280	822	60.5	31.8	147	473
1 x 6	1032171	4.54	4.55	25.4	34.0	155	52.1	636	483	701	548	76.2	36.3	165	157
1 x 12	1032199	4.54	6.06	25.4	34.0	155	52.1	941	636	1006	701	76.2	36.3	165	309
1 x 18	1032215	4.54	7.58	25.4	34.0	155	52.1	1245	788	1310	853	76.2	36.3	165	462
1 x 24	1032233	4.54	9.33	25.4	34.0	154	52.1	1565	956	1630	1021	76.2	36.3	164	631
1-1/4 x 12	1032251	6.89	9.48	31.8	46.7	205	71.5	1035	730	1117	812	91.2	46.2	216	306
1-1/4 x 18	1032279	6.89	11.3	31.8	46.7	205	71.5	1340	883	1422	965	91.2	46.2	216	459
1-1/4 x 24	1032297	6.89	13.1	31.8	46.7	205	71.5	1659	1050	1741	1131	91.2	46.2	216	625
1-1/2 x 12	1032313	9.71	13.9	38.1	52.3	227	71.4	1080	775	1174	869	104	53.8	240	313
1-1/2 x 18	1032331	9.71	16.3	38.1	52.3	227	71.4	1384	927	1479	1021	104	53.8	240	465
1-1/2 x 24	1032359	9.71	18.8	38.1	52.3	227	71.4	1705	1095	1799	1189	104	53.8	240	633
1-3/4 x 18	1032395	12.7	23.6	44.5	66.0	238	85.0	1406	949	1518	1061	118	60.5	253	467
1-3/4 x 24	1032411	12.7	27.1	44.5	66.0	238	85.0	1711	1101	1823	1213	118	60.5	253	619
2 x 24	1032439	16.8	40.8	50.8	66.5	300	95.0	1846	1236	1980	1370	148	68.3	331	622
2-1/2 x 24	1032457	27.2	71.7	63.5	77.7	337	113	1932	1323	2100	1490	165	79.2	350	625
2-3/4 x 24	1032475	34.0	84.6	69.9	93.7	379	106	1982	1373	2176	1566	178	82.6	383	626

5:1 Design Factor. Proof Load is 2.5 times the Working Load Limit. *Mechanically galvanized

Copyright © 2023 The Crosby Group LLC All Rights Reserved

HG-228

- End fittings are Quenched & Tempered or normalized, bodies heat-treated by normalizing.
- Hot-dip Galvanized steel.
- TURNBUCKLES RECOMMENDED FOR STRAIGHT OR IN-LINE PULL ONLY.
- Forged jaw ends are fitted with bolts and nuts for 6 mm through 16 mm, and pins and cotters on 19 mm through 70 mm sizes.
- Modified UNJ thread on end fittings for improved fatigue properties.
- Body has UNC threads.
- Lock nuts available for all sizes.
- Fatigue rated to 20,000 cycles at 1-1/2 times the Working Load Limit.
- Meets or exceeds all requirements of ASME B30.26 including identification, ductility, design factor, proof load and temperature requirements. Importantly, these turnbuckles meet other critical performance requirements including fatigue life, impact properties and material traceability, not addressed by ASME B30.26.
- Meets the performance requirements of Federal Specifications FF-T-791b, Type 1 Form 1 - CLASS 7, and ASTM F-1145, except for those provisions required of the contractor. For additional information, see Warnings & Applications.

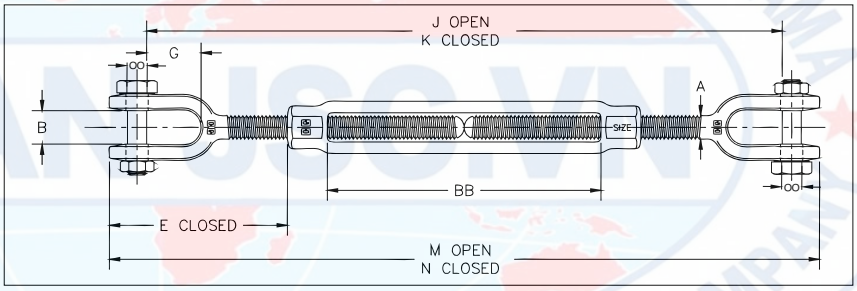

Q&T Fatigue Rated

APPLICATION AND WARNING INFORMATION
SECTION 17

HG-228 Jaw & Jaw

Thread Dia. & Take Up (in)	Stock No.	Working Load Limit (t)	Weight Each (kg)	Dimensions (mm) A	B	E Closed	G	J Open	K Closed	M Open	N Closed	BB
* 5/16 x 4-1/2	1032518	.36	.25	7.94	12.7	51.2	22.0	332	218	359	244	116
* 3/8 x 6	1032536	.54	.39	9.53	13.5	53.5	21.5	413	260	445	292	155
1/2 x 6	1032554	1.00	.83	12.7	16.3	81.8	27.1	474	321	512	359	153
1/2 x 9	1032572	1.00	1.04	12.7	16.3	81.3	27.1	633	405	671	443	238
1/2 x 12	1032590	1.00	1.23	12.7	16.3	81.3	27.1	786	481	824	519	314
5/8 x 6	1032616	1.59	1.46	15.9	20.1	99.1	33.5	501	349	554	402	153
5/8 x 9	1032634	1.59	1.79	15.9	20.1	98.8	33.5	662	434	715	487	239
5/8 x 12	1032652	1.59	2.08	15.9	20.1	98.8	33.5	815	510	868	563	315
3/4 x 6	1032670	2.36	2.18	19.1	24.6	120	38.5	536	383	601	449	156
3/4 x 9	1032698	2.36	2.65	19.1	24.6	119	38.5	698	470	764	535	244
3/4 x 12	1032714	2.36	3.05	19.1	24.6	119	38.5	851	546	916	612	320
3/4 x 18	1032732	2.36	3.83	19.1	24.6	120	38.5	1155	698	1221	764	471
7/8 x 12	1032750	3.27	4.25	22.2	29.5	140	44.8	880	575	956	651	309
7/8 x 18	1032778	3.27	5.34	22.2	29.5	140	44.8	1197	740	1272	815	473
1 x 6	1032796	4.54	4.74	25.4	34.0	155	52.1	605	453	690	538	157
1 x 12	1032812	4.54	6.25	25.4	34.0	155	52.1	910	605	995	690	309
1 x 18	1032830	4.54	7.77	25.4	34.0	155	52.1	1215	757	1300	843	462
1 x 24	1032858	4.54	9.51	25.4	34.0	154	52.1	1535	925	1620	1010	631
1-1/4 x 12	1032876	6.89	9.94	31.8	46.7	205	71.5	1000	695	1107	802	306
1-1/4 x 18	1032894	6.89	11.7	31.8	46.7	205	71.5	1305	848	1412	955	459
1-1/4 x 24	1032910	6.89	13.5	31.8	46.7	205	71.5	1624	1014	1731	1121	625
1-1/2 x 12	1032938	9.71	14.8	38.1	52.3	227	71.4	1035	731	1160	855	313
1-1/2 x 18	1032956	9.71	17.2	38.1	52.3	227	71.4	1340	883	1465	1008	465
1-1/2 x 24	1032974	9.71	19.7	38.1	52.3	227	71.4	1661	1051	1786	1176	633
1-3/4 x 18	1033018	12.7	24.3	44.5	66.0	238	85.0	1355	898	1503	1045	467
1-3/4 x 24	1033036	12.7	27.7	44.5	66.0	238	85.0	1660	1050	1807	1198	619
2 x 24	1033054	16.8	43.7	50.8	66.5	300	95.0	1769	1159	1949	1339	622
2-1/2 x 24	1033072	27.2	75.9	63.5	77.7	337	113	1853	1244	2087	1478	625
2-3/4 x 24	1033090	34.0	90.1	69.9	93.7	379	106	1899	1289	2172	1562	626

5:1 Design Factor. Proof Load is 2.5 times the Working Load Limit. *Mechanical galvanized

Copyright © 2023 The Crosby Group LLC All Rights Reserved

Crosby

HG-4037

- Quenched & Tempered or normalized.
- Hot-dip Galvanized steel.
- Turnbuckle eyes are forged elongated, by design, to maximize easy attachment in system and minimize stress in the eye. For turnbuckle sizes 6 mm through 64 mm, a shackle one size smaller can be reeved through eye.
- Modified UNJ thread for improved fatigue properties.
- Fatigue rated.

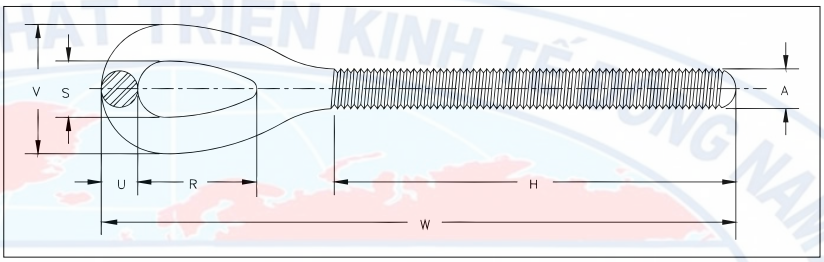

Q&T Fatigue Rated

HG-4037 Eye End Fittings

Shank Dia. & Take Up (in)	RH Eye Stock No.	LH Eye Stock No.	Working Load Limit (t)	Weight Each (kg)	Dimensions (mm)						
					A	H	R	S	U	V	W
* 1/4 x 4	1071057	1071672	.23	.03	6.35	65.8	20.6	8.64	5.59	19.8	106
* 5/16 x 4 1/2	1071075	1071690	.36	.06	7.94	76.2	24.1	11.2	7.11	25.4	127
* 3/8 x 6	1071093	1071716	.54	.10	9.53	98.6	28.7	13.5	8.64	30.7	155
1/2 x 6	1071119	1071734	1.00	.23	12.7	106	35.8	18.0	11.2	40.4	188
1/2 x 9	1071137	1071752	1.00	.27	12.7	145	35.8	18.0	11.2	40.4	226
1/2 x 12	1071155	1071770	1.00	.31	12.7	183	35.8	18.0	11.2	40.4	264
5/8 x 6	1071173	1071798	1.59	.37	15.9	113	45.7	22.4	12.7	47.8	212
5/8 x 9	1071191	1071814	1.59	.43	15.9	151	45.7	22.4	12.7	47.8	250
5/8 x 12	1071217	1071832	1.59	.49	15.9	189	45.7	22.4	12.7	47.8	289
3/4 x 6	1071235	1071850	2.36	.62	19.1	116	53.1	25.4	16.0	57.4	235
3/4 x 9	1071253	1071878	2.36	.70	19.1	154	53.1	25.4	16.0	57.4	273
3/4 x 12	1071271	1071896	2.36	.78	19.1	192	53.1	25.4	16.0	57.4	311
3/4 x 18	1071299	1071912	2.36	.95	19.1	268	53.1	25.4	16.0	57.4	387
7/8 x 12	1071315	1071930	3.27	1.18	22.2	198	60.5	31.8	19.1	69.9	333
7/8 x 18	1071333	1071958	3.27	1.42	22.2	275	60.5	31.8	19.1	69.9	409
1 x 6	1071351	1071976	4.54	1.43	25.4	129	76.2	36.3	22.4	81.0	279
1 x 12	1071379	1071994	4.54	1.73	25.4	205	76.2	36.3	22.4	81.0	356
1 x 18	1071397	1072010	4.54	2.03	25.4	281	76.2	36.3	22.4	81.0	432
1 x 24	1071413	1072038	4.54	2.34	25.4	357	76.2	36.3	22.4	81.0	508
1-1/4 x 12	1071431	1072056	6.89	3.21	31.8	213	91.2	46.2	28.4	103	411
1-1/4 x 18	1071459	1072074	6.89	3.68	31.8	289	91.2	46.2	28.4	103	487
1-1/4 x 24	1071477	1072092	6.89	4.15	31.8	365	91.2	46.2	28.4	103	564
1-1/2 x 12	1071495	1072118	9.71	4.68	38.1	222	104	53.8	31.8	117	441
1-1/2 x 18	1071510	1072136	9.71	5.37	38.1	298	104	53.8	31.8	117	517
1-1/2 x 24	1071538	1072154	9.71	6.05	38.1	375	104	53.8	31.8	117	594
1-3/4 x 18	1071574	1072190	12.7	7.93	44.5	309	118	60.5	38.1	137	538
1-3/4 x 24	1071592	1072216	12.7	8.85	44.5	385	118	60.5	38.1	137	614
2 x 24	1071618	1072234	16.8	13.1	50.8	396	148	68.3	44.5	157	701
2-1/2 x 24	1071636	1072252	27.2	21.0	63.5	446	165	79.2	50.8	181	752
2-3/4 x 24	1071654	1072270	34.0	27.3	69.9	449	178	82.6	57.2	197	785

*Mechanically galvanized

Copyright © 2023 The Crosby Group LLC All Rights Reserved

HG-4037 Jaw End Fittings

- Quenched & Tempered or normalized.
- Hot-dip galvanized steel.
- Forged jaw ends are fitted with bolts and nuts on sizes 6 mm through 16 mm, and pins and cotters on sizes 19 mm through 70 mm.
- Modified UNJ thread for improved fatigue properties.
- Fatigue Rated.

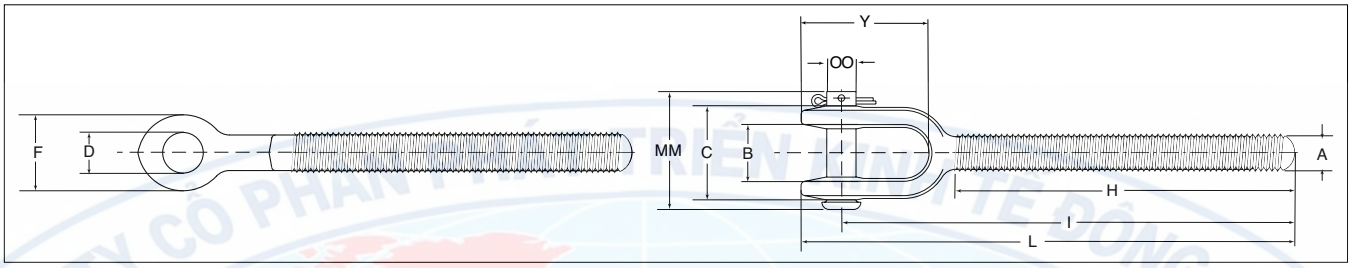

HG-4037 Jaw End Fittings

Shank Dia. & Take Up (in)	RH Jaw Stock No.	LH Jaw Stock No.	Working Load Limit (t)	Weight Each (kg)	Dimensions (mm) A	B	C	D	F	H	I Nom. Min.	L Nom. Min.	Y	MM	OO Bolt Pin
* 1/4 x 4	1072298	1072911	.23	.05	6.35	11.4	23.1	7.62	16.0	65.8	94.5	104	28.7	35.8	6.35
* 5/16 x 4 1/2	1072314	1072939	.36	.08	7.94	12.7	25.9	7.62	17.5	76.2	112	122	35.3	35.8	6.35
* 3/8 x 6	1072332	1072957	.54	.13	9.53	13.5	29.2	9.14	20.6	98.6	134	146	37.3	40.1	7.87
1/2 x 6	1072350	1072975	1.00	.25	12.7	16.3	34.5	10.7	25.4	106	165	180	46.0	47.5	9.40
1/2 x 9	1072378	1072993	1.00	.29	12.7	16.3	34.5	10.7	25.4	145	203	218	46.0	47.5	9.40
1/2 x 12	1072396	1073019	1.00	.33	12.7	16.3	34.5	10.7	25.4	183	242	256	46.0	47.5	9.40
5/8 x 6	1072412	1073037	1.59	.48	15.9	20.1	44.5	14.0	33.3	109	181	201	59.9	62.0	12.7
5/8 x 9	1072430	1073055	1.59	.54	15.9	20.1	44.5	14.0	33.3	148	219	239	59.9	62.0	12.7
5/8 x 12	1072458	1073073	1.59	.59	15.9	20.1	44.5	14.0	33.3	186	257	277	59.9	62.0	12.7
3/4 x 6	1072476	1073091	2.36	.75	19.1	24.6	53.1	17.5	41.4	116	200	225	71.4	65.0	16.0
3/4 x 9	1072494	1073117	2.36	.83	19.1	24.6	53.1	17.5	41.4	154	238	263	71.4	65.0	16.0
3/4 x 12	1072519	1073135	2.36	.92	19.1	24.6	53.1	17.5	41.4	192	276	301	71.4	65.0	16.0
3/4 x 18	1072537	1073153	2.36	1.09	19.1	24.6	53.1	17.5	41.4	268	352	377	71.4	65.0	16.0
7/8 x 12	1072555	1073171	3.27	1.31	22.2	29.5	65.0	20.6	47.8	198	297	325	82.6	78.5	19.1
7/8 x 18	1072573	1073199	3.27	1.47	22.2	29.5	65.0	20.6	47.8	275	373	402	82.6	78.5	19.1
1 x 6	1072591	1073215	4.54	1.61	25.4	34.0	70.1	23.9	53.8	129	237	269	94.7	87.4	22.4
1 x 12	1072617	1073233	4.54	1.91	25.4	34.0	70.1	23.9	53.8	205	314	345	94.7	87.4	22.4
1 x 18	1072635	1073251	4.54	2.22	25.4	34.0	70.1	23.9	53.8	281	390	421	94.7	87.4	22.4
1 x 24	1072653	1073279	4.54	2.52	25.4	34.0	70.1	23.9	53.8	357	466	498	94.7	87.4	22.4
1-1/4 x 12	1072671	1073297	6.89	3.67	31.8	46.7	94.5	30.2	66.8	213	362	401	125	115	28.7
1-1/4 x 18	1072699	1073313	6.89	4.15	31.8	46.7	94.5	30.2	66.8	289	438	477	125	115	28.7
1-1/4 x 24	1072715	1073331	6.89	4.62	31.8	46.7	94.5	30.2	66.8	365	514	553	125	115	28.7
1-1/2 x 12	1072733	1073359	9.71	5.57	38.1	52.3	106	37.3	79.2	222	383	428	134	130	35.1
1-1/2 x 18	1072751	1073377	9.71	6.26	38.1	52.3	106	37.3	79.2	298	459	504	134	130	35.1
1-1/2 x 24	1072779	1073395	9.71	6.94	38.1	52.3	106	37.3	79.2	375	535	580	134	130	35.1
1-3/4 x 18	1072813	1073439	12.7	8.57	44.5	66.0	118	43.7	88.9	309	470	523	159	152	41.4
1-3/4 x 24	1072831	1073457	12.7	9.50	44.5	66.0	118	43.7	88.9	385	546	599	159	152	41.4
2 x 24	1072859	1073475	16.8	16.0	50.8	66.5	142	53.1	106	396	605	670	185	175	50.8
2-1/2 x 24	1072877	1073493	27.2	25.3	63.5	77.7	148	60.5	143	437	650	739	230	191	57.2
2-3/4 x 24	1072895	1073518	34.0	32.8	69.9	93.7	167	73.2	155	441	679	781	243	213	69.9

*Mechanical galvanized

Copyright © 2023 The Crosby Group LLC All Rights Reserved

Crosby

HG-2510 Body

- Heat treat by normalizing.
- Hot-dip Galvanized.
- UNC threads
- Fatigue rated.
- Meets the performance requirements of Federal Specifications FF-T-791b,Type 1, Form 1 - Class 2, except for those provisions required by the contractor.

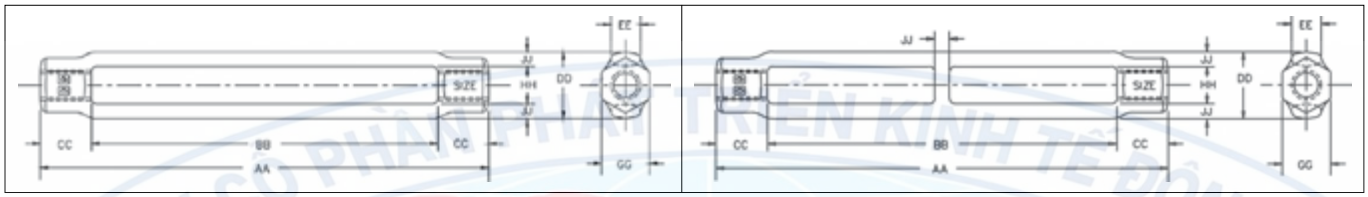

HG-2510 Body

Shank Dia. & Take Up (in)	Stock No.	Working Load Limit (t)	Weight Each (kg)	Dimensions (mm)							
				AA	BB	CC	DD	EE	GG	HH	JJ
* 5/16 x 4-1/2	1033919	.36	.10	142	116	12.7	20.8	9.65	14.2	11.2	4.83
* 3/8 x 6	1033937	.54	.13	185	155	15.0	22.4	9.65	16.0	12.7	4.83
1/2 x 6	1033955	1.00	.32	196	153	21.1	30.2	17.3	20.6	16.0	7.11
† 1/2 x 9	1033973	1.00	.47	280	238	21.1	30.2	17.3	20.6	16.0	7.11
† 1/2 x 12	1033991	1.00	.58	356	314	21.1	30.2	17.3	20.6	16.0	7.11
5/8 x 6	1034017	1.59	.50	204	153	25.1	36.3	21.1	25.4	19.1	8.64
† 5/8 x 9	1034035	1.59	.72	289	239	25.1	36.3	21.1	25.4	19.1	8.64
† 5/8 x 12	1034053	1.59	.89	365	315	25.1	36.3	21.1	25.4	19.1	8.64
3/4 x 6	1034071	2.36	.68	210	156	26.9	44.2	23.9	28.7	23.9	10.2
† 3/4 x 9	1034099	2.36	.98	298	244	26.9	44.2	23.9	28.7	23.9	10.2
† 3/4 x 12	1034115	2.36	1.21	374	320	26.9	44.2	23.9	28.7	23.9	10.2
† 3/4 x 18	1034133	2.36	1.65	525	471	26.9	44.2	23.9	28.7	23.9	10.2
7/8 x 12	1034179	3.27	1.64	371	309	31.2	50.8	28.7	33.3	26.9	11.9
† 7/8 x 18	1034197	3.27	2.39	536	473	31.2	50.8	28.7	33.3	26.9	11.9
1 x 6	1034213	4.54	1.51	229	157	35.8	62.2	31.8	38.1	31.8	15.2
1 x 12	1034231	4.54	2.42	381	309	35.8	62.2	31.8	38.1	31.8	15.2
† 1 x 18	1034259	4.54	3.33	533	462	35.8	62.2	31.8	38.1	31.8	15.2
† 1 x 24	1034277	4.54	4.47	703	631	35.8	62.2	31.8	38.1	31.8	15.2
1-1/4 x 12	1034339	6.89	2.59	391	306	42.4	66.5	31.8	47.8	38.1	14.2
1-1/4 x 18	1034357	6.89	3.44	544	459	42.4	66.5	31.8	47.8	38.1	14.2
† 1-1/4 x 24	1034375	6.89	4.29	710	625	42.4	66.5	31.8	47.8	38.1	14.2
1-1/2 x 12	1034437	9.71	3.63	402	313	44.5	75.9	38.1	57.2	44.5	15.7
1-1/2 x 18	1034455	9.71	4.72	554	465	44.5	75.9	38.1	57.2	44.5	15.7
† 1-1/2 x 24	1034473	9.71	5.85	723	633	44.5	75.9	38.1	57.2	44.5	15.7
1-3/4 x 18	1034552	12.7	7.12	570	467	51.6	91.9	44.5	66.5	53.8	19.1
1-3/4 x 24	1034570	12.7	8.71	722	619	51.6	91.9	44.5	66.5	53.8	19.1
2 x 24	1034632	16.8	11.7	740	622	58.9	105	50.8	76.2	60.5	22.4
2-1/2 x 24	1034678	27.2	25.4	804	625	89.7	143	69.9	98.6	79.3	31.8
2-3/4 x 24	1034696	34.0	24.5	804	626	88.9	143	69.9	98.6	114	31.8

*Mechanically galvanized
†Contains Center Rib for additional body support

Copyright © 2023 The Crosby Group LLC All Rights Reserved

HG-223

- End fittings are Quenched & Tempered or normalized, bodies heat-treated by normalizing.
- Hot-dip galvanized steel.
- Hooks are forged with a greater cross sectional area that results in a stronger hook with better fatigue properties.
- TURNBUCKLES RECOMMENDED FOR STRAIGHT OR IN-LINE PULL ONLY.
- Modified UNJ thread on end fittings for improved fatigue properties.
- Body has UNC threads.
- Lock nuts available for all sizes.
- Fatigue rated to 20,000 cycles at 1-1/2 times the Working Load Limit.
- Meets or exceeds all requirements of ASME B30.26 including identification, ductility, design factor, proof load and temperature requirements. Importantly, these turnbuckles meet other critical performance requirements including fatigue life, impact properties and material traceability, not addressed by ASME B30.26.
- Meets the performance requirements of Federal Specifications FF-T-791b, Type 1 Form 1 - CLASS 5, and ASTM F-1145, except for those provisions required of the contractor. For additional information, see warnings and applications section.

Q&T Fatigue Rated

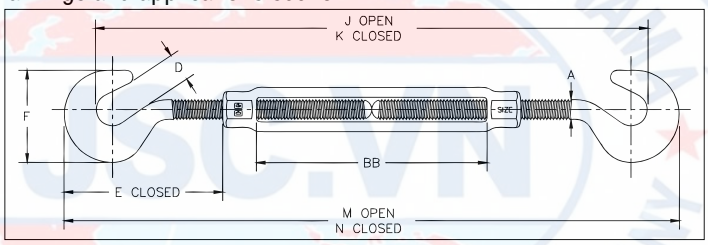

HG-223 Hook & Hook

Thread Dia. & Take Up (in)	Stock No.	Working Load Limit (t)*	Weight Each (kg)	Dimensions (mm)								
				A	D	E Closed	F	J Open	K Closed	M Open	N Closed	BB
1 x 12	1030333	2.27	6.70	25.4	31.8	167	108	929	637	1019	714	309

5:1 Design Factor. Proof Load is 2.5 times the Working Load Limit.

HG-4037

- Quenched & Tempered or normalized.
- Hot-dip galvanized steel.
- Hooks are forged with a greater cross sectional area that results in a stronger hook with better fatigue properties.
- Fatigue rated to 20,000 cycles at 1-1/2 times the Working Load Limit.

Q&T Fatigue Rated

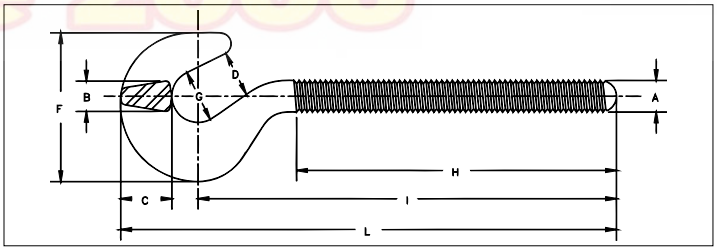

HG-4037 Hook End Fittings

Shank Dia. & Take Up (in)	RH Hook Stock No.	LH Hook Stock No.	Working Load Limit (t)	Weight Each (kg)	Dimensions (mm)								
					A	B	C	D	F	G	H	I	L
1 x 12	1070334	1070851	2.27	2.14	25.4	25.4	38.9	31.8	108	35.1	205	301	357

Copyright © 2023 The Crosby Group LLC All Rights Reserved

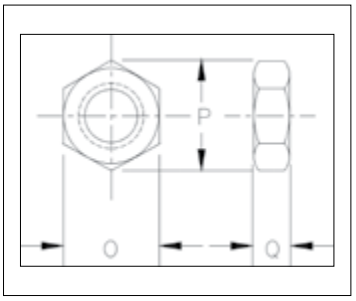

HG-4060 / HG-4061

- Secures the turnbuckle into position at final adjustment.

HG-4060 / HG-4061 Lock Nuts

Shank Diameter (in)	RIght Hand HG-4060 Stock No.	Left Hand HG-4061 Stock No.	Weight Per 100 (kg)	Dimensions (mm)		
				O	P	Q
1/4	1075115	1075491	.36	11.2	12.7	4.05
5/16	1075133	1075516	.59	12.7	14.2	4.85
3/8	1075151	1075534	.91	14.2	16.3	5.60
1/2	1075197	1075570	1.81	19.1	21.8	7.85
5/8	1075213	1075598	3.18	23.9	26.9	9.65
3/4	1075231	1075614	4.99	28.7	32.0	10.7
7/8	1075259	1075632	7.39	33.3	38.1	12.2
1	1075277	1075650	10.8	38.1	42.9	14.0
1-1/8	1075295	1075678	14.5	38.1	42.9	14.0
1-1/4	1075311	1075696	28.3	47.8	54.0	18.3
1-1/2	1075357	1075730	32.7	57.0	64.5	21.3
1-3/4	1075393	1075776	51	70.0	81.0	25.4
2	1075419	1075794	68	79.0	91.5	28.4
2-1/2	1075455	1075838	150	98.5	114	38.1
2-3/4	1075473	1075856	193	108	125	41.1

CÔNG TY CỔ PHẦN PHÁT TRIỂN ASEAN TĐ ASEAN JSC.VN ASEAN DEVELOPMENT JOINT STOCK COMPANY
ISO 9001:2015
Since 2006

Copyright © 2023 The Crosby Group LLC All Rights Reserved

Alloy Steel Rigging Screw No 801 / 802 / 804 Grade 6

Standard Working load acc. to US Federal spec. FF-T-791.b.
Supplied with closed body from 5,510 - 37,468 lb, larger dimensions open body.
Material: Quenched & Tempered alloy steel.
Surface treatment Hot-dip galvanized.
Design Factor 5:1
Certificate: Test certificate and traceable 3.1 certificate supplied on request.
Tolerances: +/- 5%
Temperature: -20°C to 200°C

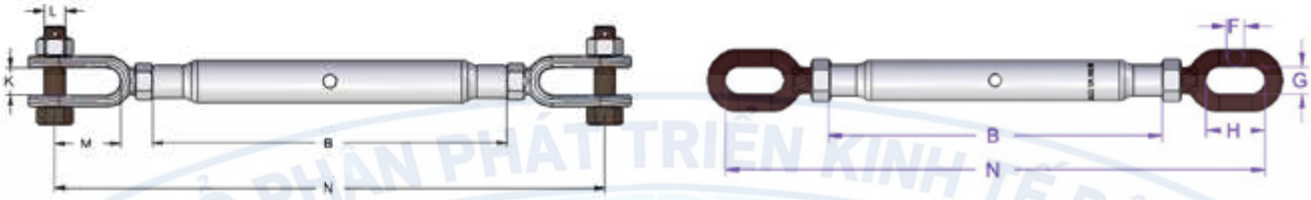

Stock no. Jaw/Jaw 801	Stock no. Jaw/Eye 802	Stock no. Eye/Eye 804	Thread M/UNC	WLL (t)	Take up range (mm)	Dimensions (mm)								Weight each (kg)
						B	N	K	L	M	F	G	H	
A801420	A802420	A804420	M 20	2.5	210	270	455	20	16	50	13	21	45	2.3
A801424	A802424	A804424	M 24	5.0	250	340	570	28	22	65	19	28	56	4.6
A801432	A802432	A804432	1-1/4	7.0	270	370	680	38	28	85	22	35	70	8.0
A801438	A802438	A804438	1-1/2	10.0	300	400	790	45	32	100	25	40	78	14.0
A801445	A802445	A804445	1-3/4	13.0	360	500	870	50	39	105	30	45	90	24.0
A801450	A802450	A804450	2”	17.0	450	600	1030	58	45	120	35	45	100	38.0
A801464			2-1/2	27.2	534	780	1312	75	57	142				88.0
A801470			2-3/4	34.0	576	780	1418	90	70	145				98.0

Rigging Screw No 401 / 402 / 404 - Hot-Dip Galvanized

Design: Jaw-Jaw (jaw-eye and eye-eye on request)
Standard According to B.S. 4429, closed body - with locking nut.
Material: St. 42/St. 52, normalized
Surface treatment Hot-dip galvanized (M6 & M8 zinc plated).
Design Factor 5:1
Note: The items marked with * below are not for lifting.
Tolerances: +/- 5%

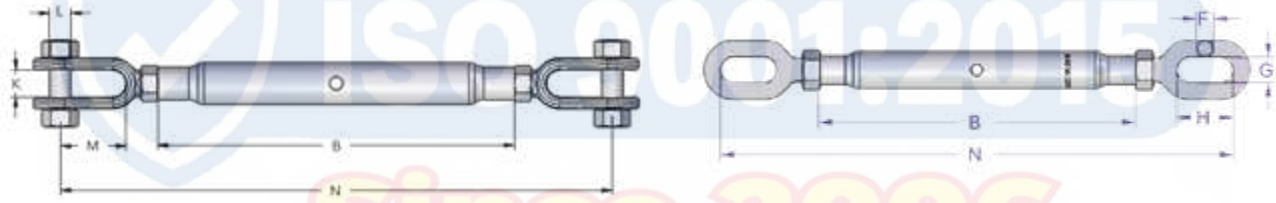

Stock no. Jaw/ Jaw 401	Stock no. Jaw/ Eye 402	Stock no. Eye/Eye 404	Thread M/UNC	WLL (t)	Take up range (mm)	Dimensions (mm)								Weight each (kg)
						B	N	L	M	K	F	G	H	
A401510	A402410	A404410	M 10	0.5	90	145	225	8	20	9.5	7	13	13	0.3
A401512	A402412	A404412	M 12	0.7	155	195	315	10	30	13	10	14	28	0.65
A401516	A402416	A404416	M 16	1.2	185	230	380	12	44	18	12	18	45	1.25
A401520	A402420	A404520	M 20	1.5	210	270	450	16	50	20	13	21	45	2.2
A401422	A402422	A404422	M 22	2.2	230	295	500	20	60	25	16	24	50	3.3
A401424	A402424	A404424	M 24	3.2	250	325	555	22	65	28	19	28	56	4.6
A401432	A402432	A404432	1-1/4	4.8	290	370	680	28	85	38	22	35	70	8.5
A401438	A402438	A404438	1-1/2	6.0	300	400	760	32	100	45	25	40	90	14.5
A401445	A402445	A404445	1-3/4	8.5	290	400	760	38	105	50	30	45	90	20.9
A401452	A402452	A404452	2”	11.0	290	400	820	45	120	58	35	45	100	24.0

* Will not be delivered with lifting certificate.

Copyright © 2023 The Crosby Group LLC All Rights Reserved

EFFICIENT & ERGONOMIC LOAD SECUREMENT TECHNOLOGY

Speedbinders is changing the load binder industry with patented **Torque Drive** technology. Our line of products provide considerable time savings and enhanced safety benefits for drivers by eliminating repetitive, straining operations. Torque Drive binders are revolutionizing load securement. By adopting the practice of using portable power drill to secure loads and pull the chain tight, you can alleviate shoulder strain, reduce injuries, and allow for easier operation and reduced operation time.

ANATOMY OF A SPEEDBINDER

- ENHANCED SAFETY FEATURES
- MORE ERGONOMIC
- QUICKER TIE-DOWN & RELEASE TIMES
- LONGER LASTING
- HIGHEST TENSION
- EASY TO OPERATE IN TIGHT SPOTS
- UNMATCHED TENSION RETENTION
- TAMPER-RESISTANT

PRODUCT RANGE

TD66BL

Color marking: Blue
WLL: 2,994 kg
Chain size: 8mm-10mm
Proof tested to: 5,987 kg
Design factor: 3:1
Common applications: Light equipment transport, Logging

TD92RL

Color marking: Red
WLL: 4,173 kg
Chain size: 10mm-13mm
Proof tested to: 8,347 kg
Design factor: 3:1
Common applications: Equipment transport, Heavy towing, Steel coil transport

TD13GLHH

Color marking: Green
WLL: 5897 kg
Chain size: 13mm-16mm
Proof tested to: 11,794 kg
Design factor: 3:1
Common applications: Equipment transport, Heavy hauling, Steel coil transport

LIFTING POINTS

A wide range of high-quality lifting points for every application.

CÔNG TY CỔ PHẦN ĐẦU TƯ PHÁT TRIỂN KINH TẾ ĐÔNG NAM Á
ASEAN JSC.VN
ASEAN DEVELOPMENT JOINT STOCK COMPANY
ISO 9001:2015
Since 2006

the Crosby group

thecrosbygroup.com

Crosby

G-277

- Forged steel, Quenched & Tempered.
- Fatigue rated at 1-1/2 times the Working Load Limit at 20,000 cycles.
- Working Load Limits shown are for in-line pull. For angle loading, see warnings and application section.
- Meets or exceeds all requirements of ASME B30.26, including identification, ductility, design factor, proof load, and temperature requirements. Importantly, these bolts meet other critical performance requirements, including fatigue life, impact properties, and material traceability not addressed by ASME B30.26.
- All bolts hot-dip Galvanized after threading (UNC).
- Furnished with standard hot-dip Galvanized, heavy hex nuts.

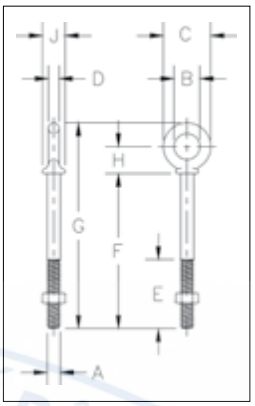

G-277 Shoulder Nut Eye Bolts

Shank Diameter & Length (mm)	Stock No.	Working Load Limit (t)	Weight Per 100 (kg)	Dimensions (mm)								
				A	B	C	D	E	F	G	H	J
7.94 x 57.0	1045050	.54	5.67	7.85	15.7	28.4	6.35	38.1	57.0	89.0	17.5	14.2
7.94 x 108	1045078	.54	8.53	7.85	15.7	28.4	6.35	63.5	108	140	17.5	14.2
9.53 x 63.5	1045096	.70	9.71	9.65	19.1	35.1	7.85	38.1	63.5	101	19.8	16.8
9.53 x 114	1045112	.70	11.5	9.65	19.1	35.1	7.85	63.5	114	152	19.8	16.8
12.7 x 82.5	1045130	1.18	19.3	12.7	25.4	44.5	9.65	38.1	82.5	130	25.4	23.1
12.7 x 152	1045158	1.18	25.8	12.7	25.4	44.5	9.65	76.0	152	200	25.4	23.1
15.9 x 102	1045176	2.35	31.1	15.7	31.8	57.0	12.7	51.0	102	164	33.3	28.4
15.9 x 152	1045194	2.35	46.4	15.7	31.8	57.0	12.7	76.0	152	214	33.3	28.4
19.1 x 114	1045210	3.26	66	19.1	38.1	70.0	15.7	51.0	114	189	39.6	35.1
19.1 x 152	1045238	3.26	76	19.1	38.1	70.0	15.7	76.0	152	227	39.6	35.1
22.2 x 127	1045256	4.80	102	22.4	44.5	82.5	19.1	63.5	127	215	46.7	39.6
25.4 x 152	1045292	6.03	166	25.4	51.0	95.5	22.4	76.0	152	253	53.0	46.0
25.4 x 229	1045318	6.03	192	25.4	51.0	95.5	22.4	102	229	329	53.0	46.0
31.8 x 203	1045336	9.52	295	31.8	63.5	114	25.4	102	203	323	62.5	58.0
31.8 x 305	1045354	9.52	361	31.8	63.5	114	25.4	102	305	425	62.5	58.0
38.1 x 381	1045372	10.8	646	38.1	76.0	140	31.8	152	381	527	76.0	70.0

5:1 Design Factor. Maximum Proof Load is 2 times the Working Load Limit.

Fatigue Rated Q&T CE

APPLICATION AND WARNING INFORMATION
SECTION 17

S-276 Shoulder Rivet Eye Bolts

- Forged steel - Quenched & Tempered.

Shank Dia. & Length (mm)	Stock No.	Weight Per 100 (kg)	Dimensions (mm)							
			A	B	C	D	E	F	G	H
12.7 x 82.5	1045862	15.0	12.7	82.5	108	130	25.4	44.5	9.65	23.1
19.1 x 114	1045942	57	19.1	114	154	189	38.1	70.0	15.7	35.1
19.1 x 152	1045960	68	19.1	152	192	227	38.1	70.0	15.7	35.1
22.2 x 127	1045988	91	22.4	127	174	215	44.5	82.5	19.1	39.6
25.4 x 152	1046022	135	25.4	152	205	253	51.0	95.5	22.4	46.0
25.4 x 229	1046040	193	25.4	229	282	329	51.0	95.5	22.4	46.0
31.8 x 203	1046068	297	31.8	203	266	323	63.5	114	25.4	58.0
31.8 x 305	1046086	323	31.8	305	368	425	63.5	114	25.4	58.0
38.1 x 381	1046102	646	38.1	381	457	527	76.0	140	31.8	70.0

QUIC-CHECK® Q&T

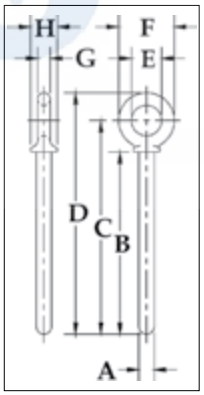

Copyright © 2023 The Crosby Group LLC All Rights Reserved

S-279 / M-279

- Forged steel - Quenched & Tempered.
- Working Load Limits shown are for in-line pull. For angle loading, see Warnings & Applications.
- Fatigue rated at 1-1/2 times the Working Load Limit at 20,000 cycles.
- Recommended for in-line pull.
- S-279 threaded UNC.
- M-279 metric threaded.
- Meets or exceeds all requirements of ASME B30.26 including identification, ductility, design factor, proof load and temperature requirements. Importantly, these bolts meet other critical performance requirements including fatigue life, impact properties and material traceability, not addressed by ASME B30.26.

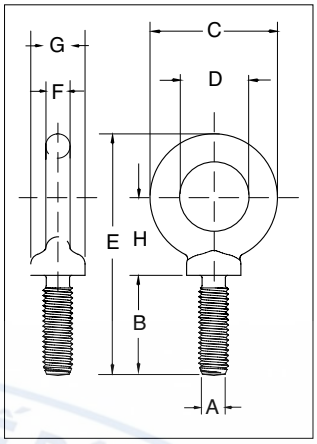

S-279 UNC Shoulder Type Machinery Eye Bolts

Size (mm)	Stock No.	Working Load Limit (t)	Weight Each (kg)	Dimensions (mm)							
				A* Thread	B	C	D	E	F	G	H
9.53 x 31.8	9900208	.70	.06	3/8 - 16	32.3	41.1	25.4	78.0	7.85	17.5	26.7
12.7 x 38.1	9900217	1.18	.12	1/2 - 13	38.9	49.5	30.2	94.0	9.65	23.1	32.3
15.9 x 44.5	9900226	2.35	.24	5/8 - 11	45.5	60.5	35.1	113	12.7	28.7	38.9
19.1 x 51.0	9900235	3.26	.43	3/4 - 10	52.0	70.0	38.1	129	16.0	35.1	43.4
22.2 x 57.0	9900244	4.80	.70	7/8 - 9	58.5	82.5	44.5	149	19.1	39.6	50.8
25.4 x 63.5	9900253	6.03	1.1	1 - 8	65.5	95.5	51.0	169	22.4	46.0	58.4
28.5 x 70.0	9900257	6.80	1.5	1-1/8 - 7	69.8	107	57.1	183	24.6	52.3	59.7
31.8 x 76.0	9900262	9.52	1.8	1-1/4 - 7	78.5	114	63.5	202	25.4	58.0	69.3
38.1 x 89.0	9900271	10.8	3.2	1-1/2 - 6	91.5	140	76.0	241	31.8	70.0	83.3
44.5 x 95.0	9900280	15.4	4.7	1-3/4 - 5	95.2	159	88.9	266	35.0	76.2	91.4
51 x 102	9900289	19.0	8.6	2 - 4-1/2	102	194	101	313	46.0	85.9	114
63.5 x 127	9900298	29.5	14.5	2-1/2 - 4	127	223	114	378	53.8	108	140

5:1 Design Factor. Maximum Proof Load is 2 times the Working Load Limit. *All bolts threaded UNC.

M-279 Metric Shoulder Type Machinery Eye Bolts

Size (mm)	Stock No.	Working Load Limit (t)	Weight Each (kg)	Dimensions (mm)							
				A* Thread	B	C	D	E	F	G	H
M6 x 13	1045753	.20	.03	M6 x 1.0	13.0	28.7	19.1	47.0	4.9	13.5	19.6
M8 x 13	1045789	.40	.05	M8 x 1.25	13.0	35.1	22.4	54.6	6.4	15.0	24.1
M10 x 17	1045833	.64	.07	M10 x 1.5	17.0	41.1	25.4	64.3	7.9	17.5	26.5
M12 x 20.5	1045869	1.0	.11	M12 x 1.75	20.5	49.5	30.2	77.7	9.7	23.1	32.8
M16 x 27	1045913	1.8	.25	M16 x 2.0	27.0	60.5	35.1	96.0	12.7	28.7	38.9
M20 x 30	1045995	2.5	.42	M20 x 2.5	30.0	70.0	38.1	108	16.0	35.1	43.4
M24 x 36	1046029	4.0	1.05	M24 x 3.0	36.0	95.5	51.0	142	22.4	46.0	58.4
M27 x 69.8	1046038	5.0	1.42	M27 x 3.0	69.8	107	57.1	183	24.6	52.3	59.7
M30 x 45	1046075	6.0	1.77	M30 x 3.5	45.0	114	63.5	171	25.4	58.0	69.3
M36 x 54	1046109	8.5	3.12	M36 x 4.0	54.0	140	76.0	207	31.8	70.0	83.3
M42 x 95.2	1046118	14.0	4.58	M42 x 4.5	95.2	159	88.9	266	35.0	76.2	91.4
M48 x 102	1046127	17.3	8.71	M48 x 5.0	102	194	101	313	46.0	85.9	114
M64 x 127	1046136	29.5	14.74	M64 x 6.0	127	223	114	378	53.8	108	140

5:1 Design Factor. Maximum Proof Load is 2 times the Working Load Limit.

Copyright © 2023 The Crosby Group LLC All Rights Reserved

Crosby

S-264

- Forged steel - Quenched & Tempered.
- Forged from 1035 carbon steel.
- Excellent welding qualities.
- Widely used on farm machinery, trucks, steel hulled marine vessels and material handling equipment.
- Reference American Welding Society specifications for proper welding procedures.

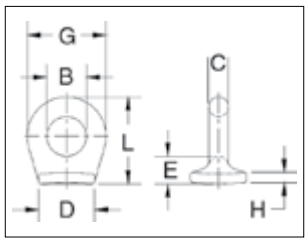

S-264 Pad Eyes

Size No.	Stock No.	Weight Per 100 (kg)	Dimensions (mm) B	C	D	E	G	H	L
* 0	1090722	1.27	6.35	4.85	16.0	7.85	16.0	2.30	19.1
* 1	1090740	2.95	9.65	6.35	22.4	10.4	22.4	3.30	26.2
* 1-1/2	1090768	4.72	16.0	6.35	25.4	11.2	28.7	4.05	33.3
2	1090786	9.57	19.1	9.65	26.9	12.7	38.1	4.85	41.4
4	1090802	23.7	25.4	14.2	36.6	19.8	54.0	5.60	59.5
5	1090820	37.4	31.8	17.5	44.5	20.6	67.0	6.35	70.0

*Meets the requirements of Military Specification MS-51930A.

G-400

- Forged steel - Quenched & Tempered.
- Hot-dip Galvanized
- Tapped with standard UNC class 2 threads after galvanizing.
- Also available in blank (as forged) item (S-4028).
- Meets or exceeds all requirements of ASME B30.26.

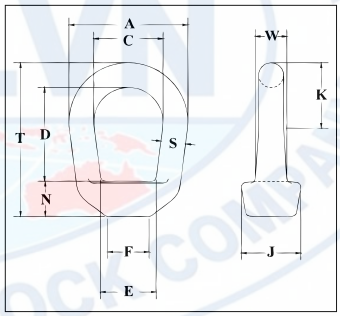

G-400 Eye Nuts

Size No.	"S" Stock Size (mm)	Stock No	Std. Tap Size (in)	Working Load Limit (t)	Weight Each (kg)	Dimensions (mm) A	C	D	E	F	J	K	N	T	W
1	6.35	1090438	1/4	.24	.04	31.8	19.1	25.4	19.1	12.7	17.5	16.0	9.65	43.7	7.85
2	7.85	1090474	3/8	.57	.08	41.1	25.4	30.5	21.1	14.2	20.6	22.6	12.7	53	10.4
3A	9.65	1090517	1/2	1.02	.13	51.0	31.8	36.6	27.4	20.6	25.4	27.7	15.7	63.5	12.7
4	12.7	1090535	5/8	1.63	.27	63.5	38.1	48.8	34.3	25.4	33.3	33.3	17.5	82.5	17.5
5	16	1090553	3/4	2.36	.45	76.0	44.5	60.5	40.4	28.4	38.1	39.9	22.4	98.8	21.3
6	19.1	1090571	7/8	3.27	.75	89.0	51.0	66.8	49.8	35.1	47.8	45.0	23.9	110	25.4
7	22.4	1090599	1	4.54	1.22	102	57.0	77.7	56.0	39.6	54.0	51.5	27.2	127	30.2
8	25.4	1090633	1-1/4	7.03	1.98	114	63.5	88.9	62.5	47.8	60.5	57.5	31.8	147	35.1
9	28.7	1090651	1-3/8	8.39	2.27	127	70.0	102	68.5	51.0	65.0	64.5	35.1	165	38.1
10	31.8	1090679	1-1/2	10.21	3.08	143	79.0	109	78.5	57.0	76.0	71.5	38.1	179	42.2
11	38.1	1090697	2	18.14	6.62	181	104	157	104	79.5	95.5	93.5	52.3	252	49.3

5:1 Design Factor. Working Load Limit shown is for In-Line pull. Rating based on standard tap size.

Copyright © 2023 The Crosby Group LLC All Rights Reserved

Crosby

User's Guide for Lifting Online Course

This training resource covers rigging fundamentals through a series of self-paced lessons that explain the Crosby User's Guide for Lifting pocket rigging card.

Take the online course

thecrosbygroup.com/courses/users-guide-for-lifting

Crosby

Swivel Hoist Ring

HR-125M
Swivel Hoist Ring

Color coded to distinguish between UNC (Red) and Metric (Silver) thread types.

HR-125
Swivel Hoist Ring

- Available in UNC and Metric thread sizes.
- UNC threads available in sizes from 800 pounds to 100,000 pounds Working Load Limit, with a design factor of 5 to 1.
- Metric threads available in sizes from 400kg to 16,900kg and dual rated in both a 4 to 1 and 5 to 1 design factor.
- All components are alloy steel - Quenched & Tempered.
- Designed to be used at full WLL within angular loading range.
- 100% individually proof tested to 2.5 times the Working Load Limit with certification and Statistically Magnetic Particle inspected. (Can be furnished 100% Magnetic Particle inspected when requested at time of order.)
- Each product has a Product Identification Code (PIC) for material traceability along with a Working Load Limit and the name Crosby or "CG" stamped into it.
- 360° swivel and 180° pivot action.
- Fatigue rated to 20,000 cycles at 1.5 times the Working Load Limit.
- Individually packaged along with proper application instructions and warning information.
- Bolt is secured with E-clip, threads are grooved. This method allows for easy disassembly and assembly of hoist ring for thorough examination of all components. Replacement kits are available.
- Bolts are individually Proof Tested.
- Multiple bolt length available to meet specific application requirements.
- Zinc plated (yellow chromate) finish for increased corrosion protection.
- Meets or exceeds all the requirements of ASME B30.26 including identification, ductility, design factor, proof load and temperature requirements. Importantly, these hoist rings meet other critical performance requirements including fatigue life, impact properties and material traceability, not addressed by ASME B30.26.

Load Rated Fatigue Rated QT

Copyright © 2023 The Crosby Group LLC All Rights Reserved

HR-125

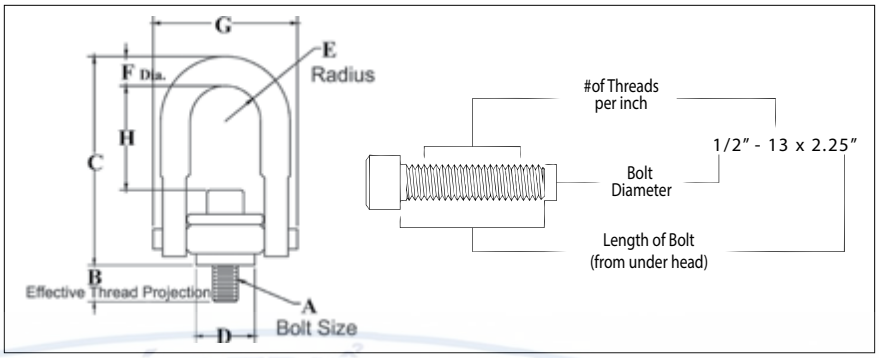

- Top washer has the following features:
  - The Working Load Limit and recommended torque value are permanently stamped into each washer.
  - Washer is color-coded for easy identification: Red - UNC thread.
- Individually Proof Tested to 2-1/2 times Working Load Limit.
- Bolt specification is an alloy socket head cap screw to ASTM A 574.
- All threads listed are UNC.
- BOLT SIZE IDENTIFICATION: The size of the bolt will be stated as in the drawing above. Illustration shows meaning of each dimension given.

HR-125 UNC Threads

Frame Size No.	Stock No.	Working Load Limit (kg)	Torque (Nm)	Bolt Size A (in)	Dimensions (mm) Effective Thread Projection Length B	C	D	Radius E	Diameter F	G	H	Weight Each (kg)
1 †	1016887	363	10	5/16 - 18 x 1.50	14.7	69.1	24.6	11.7	8.60	47.5	28.4	.17
1 †	1016898	454	16	3/8 - 16 x 1.50	14.7	69.1	24.6	11.7	8.60	47.5	26.7	.18
2	1016909	1134	38	1/2 - 13 x 2.00	17.8	123	49.8	22.1	19.0	85.1	58.2	1.06
2 †	1016912	1134	38	1/2 - 13 x 2.50	30.5	123	49.8	22.1	19.0	85.1	58.2	1.07
2	1016920	1814	81	5/8 - 11 x 2.00	17.8	123	49.8	22.1	19.0	85.1	54.9	1.09
2 †	1016924	1814	81	5/8 - 11 x 2.75	36.8	123	49.8	22.1	19.0	85.1	54.9	1.12
2	1016931	2268	136	3/4 - 10 x 2.25	24.1	123	49.8	22.1	19.0	85.1	51.8	1.14
2 †	1016935	2268	136	3/4 - 10 x 2.75	36.8	123	49.8	22.1	19.0	85.1	51.8	1.17
3	1016942	3175*	136	3/4 - 10 x 2.75	22.6	167	75.2	34.5	23.9	124	75.4	3.05
3 †	1016946	3175*	136	3/4 - 10 x 3.50	41.7	167	75.2	34.5	23.9	124	75.4	3.09
3	1016953	3629	217	7/8 - 9 x 2.75	22.6	167	75.2	34.5	23.9	124	72.1	3.10
3 †	1016957	3629	217	7/8 - 9 x 3.50	41.7	167	75.2	34.5	23.9	124	72.1	3.16
3	1016964	4536	312	1 - 8 x 3.00	29.0	167	75.2	34.5	23.9	124	69.1	3.22
3 †	1016969	4536	312	1 - 8 x 4.00	54.4	167	75.2	34.5	23.9	124	69.1	3.32
4	1016975	6804	637	1-1/4 - 7 x 4.50	56.1	221	94.2	44.5	30.2	157	99.8	6.58
5	1016986	10890	1085	1-1/2 - 6 x 6.75	3.0	315	120	60.7	44.5	215	143	17.1
5	1016997	13610	1491	2 - 4-1/2 x 6.75	3.0	315	120	60.7	44.5	215	131	18.5
6	1017001	22680	2847	2-1/2 - 4 x 8.0	102	429	146	76.2	57.2	279	204	39.9
7	1017005	34020	5830	3 - 4 x 10.5	127	495	184	95.3	69.9	360	216	75.3
8	1017009	45360	6915	3-1/2 - 4 x 13.0 #	178	561	197	102	82.6	404	236	120

5:1 Design Factor. *4:1 Design Factor when tested in 90 degree orientation. †Long Bolts are designed to be used with soft metal (i.e., aluminum) workpiece. While the long bolts may also be used with ferrous metal (i.e.,steel & iron) workpiece, short bolts are designed for ferrous workpieces only. Hex head bolt used on Frame 8 (100,000 lb) Hoist Ring.

Load Tested Fatigue Tested

APPLICATION AND WARNING INFORMATION
SECTION 17

Copyright © 2023 The Crosby Group LLC All Rights Reserved

Crosby

HR-125M

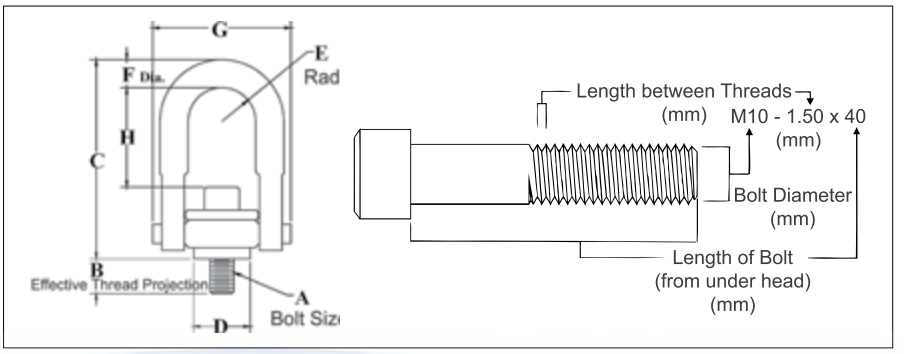

- Top washer has the following features:
  - The Working Load Limit and recommended torque value are permanently stamped into each washer.
  - Washer is color-coded for easy identification: Silver - Metric thread.
- Individually Proof Tested to 2-1/2 times Working Load Limit.
- Bolt specification is a Grade 12.9 alloy socket head cap screw to DIN 912. All threads listed are metric (ASME B18.3.1m).
- Designed to be used with ferrous workpiece only.
- BOLT SIZE IDENTIFICATION: The size of the bolt will be stated as in the drawing above. Illustration shows meaning of each dimension given.

HR-125M Metric Threads

Frame Size No.	Stock No.	Working Load Limit (kg) 5:1 Design Factor †	Working Load Limit (kg) 4:1 Design Factor †	Torque (Nm)	Dimensions (mm) Bolt Size A	Effective Thread Projection Length B	C	D	Radius E	Diameter F	G	H	Weight Each (kg)
1	1016602	400	500	10	M8X1.25X40	16.9	69.9	24.6	11.8	8.5	47.5	29.9	.17
1	1016613	450	550	16	M10X1.50X40	16.9	69.9	24.6	11.8	8.5	47.5	28.1	.18
2	1016624	1050	1300	38	M12X1.75X50	16.9	123	49.8	22.3	17.5	85.1	60.4	1.05
2	1016635	1900	2400	81	M16X2.00X60	26.9	123	49.8	22.3	17.5	85.1	56.3	1.11
2	1016644	2150	2700	136	M20X2.50X65	31.9	123	49.8	22.3	17.5	85.1	52.3	1.17
3	1016657	3000	3750	136	M20X2.50X75	27.8	167	75.2	34.7	25.4	124	76.6	3.09
3	1016668	4200	5250	312	M24X3.00X80	32.8	167	75.2	34.7	25.4	124	70.5	3.21
4	1016679	7000	8750	637	M30X3.50X120	61.7	222	94.2	44.5	30.5	157	102	6.53
5	1016690	11000	13750	1005	M36X4.00X150	54.0	318	120	60.7	44.5	215	142	16.8
5	1016701	12500	15600	1005	M42X4.50X160	64.0	318	120	60.7	44.5	215	136	17.4
5	1016712	13500	16900	1350	M48X5.00X160	74.0	318	120	60.7	44.5	215	130	18.0

† Individually proof loaded to 2-1/2 times the Working Load Limit based on the 4:1 design factor.

Load Rated Fatigue Rated CE

APPLICATION AND WARNING INFORMATION
SECTION 17

Copyright © 2023 The Crosby Group LLC All Rights Reserved

HR-1000

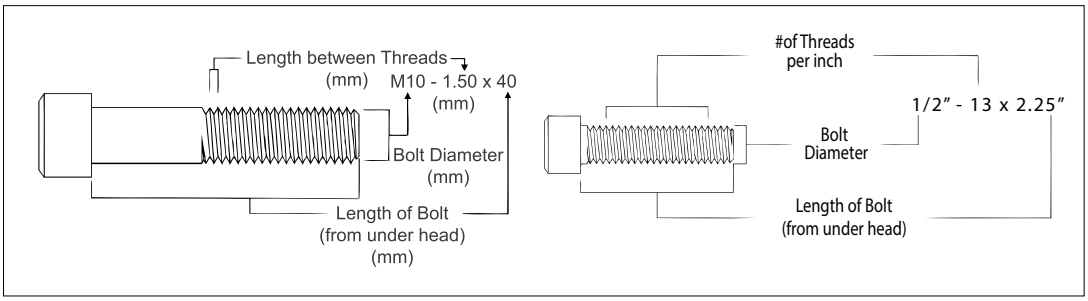

- Forged bail provides the following:
  - Easily readable raised lettering showing the name Crosby or "CG" and PIC for material traceability.
  - Greater durability providing the increased "Toughness" desired in potentially abusive field conditions.
  - Larger opening than standard hoist ring bail.
- Top washer is color-coded for easy identification (Red for UNC threads and Silver for Metric threads)
- The Working Load Limit and Recommended Torque value are permanently stamped into each washer.
- Individually Proof Tested to 2-1/2 times Working Load Limit.
- Available in both UNC thread and Metric thread style.
- UNC bolt specification is an alloy socket head cap screw to ASTM A 574. Metric bolt specification is a Grade 12.9 alloy socket head cap screw to DIN 912.
- BOLT SIZE IDENTIFICATION: The size of the bolt will be stated as in the drawing. Illustration shows meaning of each dimension given.

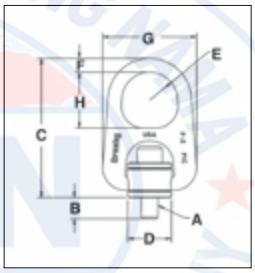

HR-1000 UNC Threads

Frame Size No.	Stock No.	Working Load Limit (kg)	Torque (Nm)	Bolt Size A (in)	Dimensions (mm) Eff. Thread Projection Length B	C	D	Radius E	F	G	H	Weight Each (kg)
1	1068002	363	10	5/16 - 18 x 1.50	13.2	93.7	24.6	15.7	11.2	57.7	35.1	.27
1	1068006	454	16	3/8 - 16 x 1.50	13.2	93.7	24.6	15.7	11.2	57.7	35.1	.28
2	1068010	1134	38	1/2 - 13 x 2.25	17.5	159	49.8	31.8	.75	107	63.5	1.38
2 †	1068014	1134	38	1/2 - 13 x 2.75	30.2	159	49.8	31.8	.75	107	63.5	1.39
2	1068018	1814	81	5/8 - 11 x 2.25	17.5	159	49.8	31.8	.75	107	63.5	1.41
2 †	1068022	1814	81	5/8 - 11 x 3.00	36.6	159	49.8	31.8	.75	107	63.5	1.44
2	1068026	2268	136	3/4 - 10 x 2.50	23.9	159	49.8	31.8	.75	107	63.5	1.47
2 †	1068030	2268	136	3/4 - 10 x 3.00	36.6	159	49.8	31.8	.75	107	63.5	1.50
3	1068034	3175*	136	3/4 - 10 x 3.00	21.6	220	75.2	41.4	25.4	159	82.6	4.58
3 †	1068038	3175*	136	3/4 - 10 x 3.50	34.3	220	75.2	41.4	25.4	159	82.6	4.63
3	1068042	3629	217	7/8 - 9 x 3.00	21.6	220	75.2	41.4	25.4	158	82.6	4.63
3 †	1068046	3629	217	7/8 - 9 x 3.50	34.3	220	75.2	41.4	25.4	158	82.6	4.71
3	1068050	4536	312	1 - 8 x 3.50	34.3	220	75.2	41.4	25.4	158	82.6	4.76
3 †	1068054	4536	312	1 - 8 x 4.50	59.7	220	75.2	41.4	25.4	158	82.6	4.86
4	1068058	6804	637	1-1/4 - 7 x 5.00	53.1	285	94.2	50.8	31.8	199	102	9.93
4	1068062	10890	1085	1-1/2 - 6 x 5.50	65.8	285	94.2	50.8	36.6	199	102	10.4

5:1 Design Factor. *4.5:1 Design Factor when tested in 90 degree orientation. †Long Bolts are designed to be used with soft metal (i.e., aluminum) workpiece.

HR-1000M Metric Threads

Frame Size No.	Stock No.	Working Load Limit (kg) 5:1 Design Factor*	4:1 Design Factor*	Torque Nm	Dimensions (mm) Bolt Size A	Eff. Thread Projection Length B	C	D	Radius E	F	G	H	Weight Each (kg)
1	1068307	400	500	10	M8 x 1.25 x 40	15.2	93.7	24.6	15.7	11.2	57.7	35.1	0.3
1	1068316	450	550	16	M10 x 1.50 x 40	15.2	93.7	24.6	15.7	11.2	57.7	35.1	0.3
2	1068325	1050	1300	38	M12 x 1.75 x 55	15.5	162	49.8	31.8	19.1	107	63.5	1.5
2	1068334	1900	2400	81	M16 x 2.00 x 65	25.5	162	49.8	31.8	19.1	107	63.5	1.5
2	1068343	2150	2700	136	M20 x 2.50 x 70	30.5	162	49.8	31.8	19.1	107	63.5	1.6
3	1068352	3000	3750	136	M20 x 2.50 x 80	25.4	220	75.2	41.4	25.4	159	82.6	4.6
3	1068361	4200	5250	312	M24 x 3.00 x 90	35.4	220	75.2	41.4	25.4	159	82.6	4.8
4	1068370	7000	8750	637	M30 x 3.50 x 140	66.2	285	94.2	50.8	31.8	199	102	9.7
4	1068389	11000	13750	1005	M36 x 4.00 x 130	56.2	285	94.2	50.8	31.8	199	102	10.2

*Individually proof loaded to 2-1/2 times the Working Load Limit based on the 4:1 Design Factor.

Load Rated Fatigue Rated

APPLICATION AND WARNING INFORMATION SECTION 17

Copyright © 2023 The Crosby Group LLC All Rights Reserved

Crosby

HR-1000CT

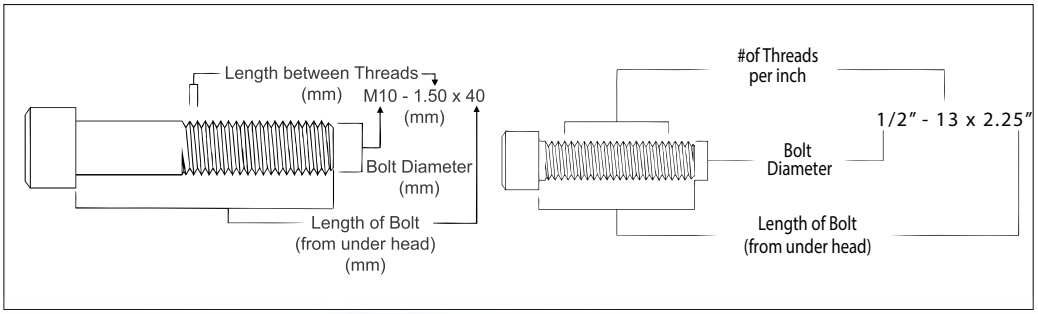

- All load bearing components are heat treated, Quenched & Tempered alloy steel.
- All components, with the exception of the retaining ring, are produced with maximum material hardness of 34 HRc.
- All primary load-bearing components have Charpy impact testing. The body, bushing, washer and bail meet impact requirements of 42-joule min. avg. at -20°C. The bolt meets impact requirements of 27-joule min. avg. at -100°C.
- Individually magnetic particle inspected with certification.
- Forged bail provides the following:
  - Easily readable raised lettering showing the name Crosby or "CG" and PIC for material traceability.
  - Greater durability providing the increased toughness desired in potentially abusive field conditions.
  - Larger opening than standard hoist ring bail.
- Bolt specification is an alloy socket head cap screw to ASTM A320 Grade L7 or L43.
- Top washer is color-coded for easy identification (blue for UN threads and grey for Metric threads).
- The Working Load Limit and recommended torque value are permanently stamped into each washer.
- Individually Proof Tested to 2 times Working Load Limit (90° and in-line).
- BOLT SIZE IDENTIFICATION: The size of the bolt will be stated as in the drawing above. Illustration shows meaning of each dimension given.
- Type approval and certification in accordance with DNV Offshore Standard DNV-OS-E101, Drilling Plant, Standard for Certification DNVGL-ST-0378, Lifting Appliances, and DNVGL-SI-0166.
- Individually serialized.
- 100% MPI all primary load bearing components.
- Coating: Thermo-diffusion galvanized.
- Optional bolt sizes available upon request.

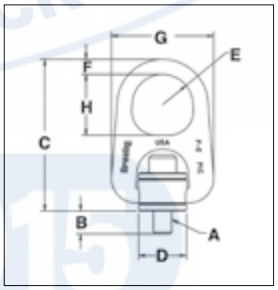

HR-1000CT UNC Threads

Frame Size No.	Stock No.	Working Load Limit (kg)	Torque (Nm)	Bolt Size A (in)	Dimensions (mm) Effective Thread Projection Length B	C	D	Radius E	Diameter F	G	H	Mass Each (kg)
2	6608103	862	38	1/2 - 13 x 2.25	17.8	161	49.8	31.8	19.1	107	63.5	3
2	6608112	862	38	1/2 - 13 x 2.75	30.5	161	49.8	31.8	19.1	107	63.5	3
2	6608121	1361	81	5/8 - 11 x 2.25	17.8	161	49.8	31.8	19.1	107	63.5	3
3	6608130	2177	136	3/4 - 10 x 3.00	21.6	218	75.2	41.4	25.4	159	82.6	11
3	6608139	2812	217	7/8 - 9 x 3.00	21.6	218	75.2	41.4	25.4	159	82.6	11
3	6608148	3765	312	1 - 8 x 3.50	34.3	218	75.2	41.4	25.4	159	82.6	11
4	6608149	5670	637	1-1/4 - 7 x 5.00	53.3	287	94.2	50.8	36.6	207	102	24
4	6607669	9072	1085	1-1/2 - 6 x 5.50	66.0	287	94.2	50.8	36.6	207	102	27
4	6607727	9072	1085	1-1/2 - 8 x 5.50	66.0	287	94.2	50.8	36.6	207	102	27
5	6607670	12701	1491	2 - 4.5 x 7.50	81.3	385	102	68.3	44.5	296	127	69
6	6607671	20412	2847	2 1/2 - 4 x 9.50	94.7	506	146	76.2	69.9	368	143	157

5:1 Design Factor.

Load Tested Fatigue Rated

APPLICATION AND WARNING INFORMATION
SECTION 17

Copyright © 2023 The Crosby Group LLC All Rights Reserved

HR-1000MCT

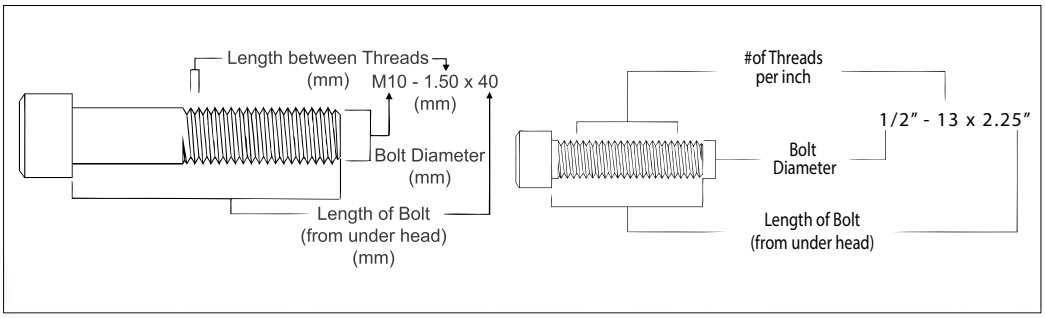

- All load bearing components are heat treated, Quenched & Tempered alloy steel.
- All components, with the exception of the retaining ring, are produced with maximum material hardness of 34 HRc.
- All primary load-bearing components have Charpy impact testing. The body, bushing, washer and bail meet impact requirements of 42-joule min. avg. at -20°C. The bolt meets impact requirements of 27-joule min. avg. at -100°C.
- Individually magnetic particle inspected with certification.
- Forged bail provides the following:
  - Easily readable raised lettering showing the name Crosby or "CG" and PIC Code for material traceability.
  - Greater durability providing the increased toughness desired in potentially abusive field conditions.
  - Larger opening than standard hoist ring bail.
- Bolt specification is an alloy socket head cap screw to ASTM A320 Grade L7 or L43.
- Top washer is color-coded for easy identification (blue for UN threads and grey for Metric threads).
- The Working Load Limit and recommended torque value are permanently stamped into each washer.
- Individually Proof Tested to 2 times Working Load Limit (90° and in-line).
- BOLT SIZE IDENTIFICATION: The size of the bolt will be stated as in the drawing above. Illustration shows meaning of each dimension given.
- Type approval and certification in accordance with DNV Offshore Standard DNV-OS-E101, Drilling Plant, Standard for Certification DNVGL-ST-0378, Lifting Appliances, and DNVGL-SI-0166.
- Individually serialized.
- 100% MPI all primary load bearing components.
- Coating: Thermo-diffusion galvanized.
- Optional bolt sizes available upon request.

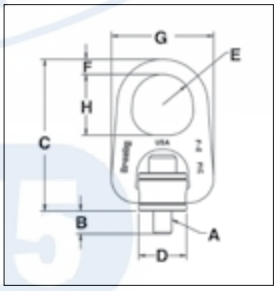

HR-1000MCT Metric Threads

Frame Size No.	Stock No.	Working Load Limit (kg) Design Factor 5:1	Working Load Limit (kg) Design Factor 4:1	Torque (Nm)	Dimensions (mm) Bolt Size A	Eff. Thread Projection Length B	C	D	Radius E	Diameter F	G	H	Mass Each (kg)
2	6630058	825	1,030	38	M12 x 1.75 x 55	15.6	160.6	49.7	31.8	19.1	106.7	63.5	1
2	6630059	1,350	1,690	81	M16 x 2.00 x 65	25.5	160.6	49.7	31.8	19.1	106.7	63.5	1
3	6630060	2,250	2,810	136	M20 x 2.50 x 80	25.3	218.2	75.1	41.4	25.4	158.8	82.6	5
3	6630061	3,175	3,970	312	M24 x 3.00 x 90	35.4	218.2	75.1	41.4	25.4	158.8	82.6	5
4	6630062	5,450	6,810	637	M30 x 3.50 x 140	65.9	287.3	94.1	50.8	36.6	206.5	101.6	11
4	6630063	7,450	9,310	1,005	M36 x 4.00 x 130	56.3	287.3	94.1	50.8	36.6	206.5	101.6	12
5	6630064	13,250	16,560	1,350	M48 x 5.00 x 180	70.7	384.9	101.6	68.3	44.5	295.6	127.0	30

5:1 Design Factor.

Lead Rated Fatigue Rated

APPLICATION AND WARNING INFORMATION
SECTION 17

Copyright © 2023 The Crosby Group LLC All Rights Reserved

Crosby

SS-125UNC

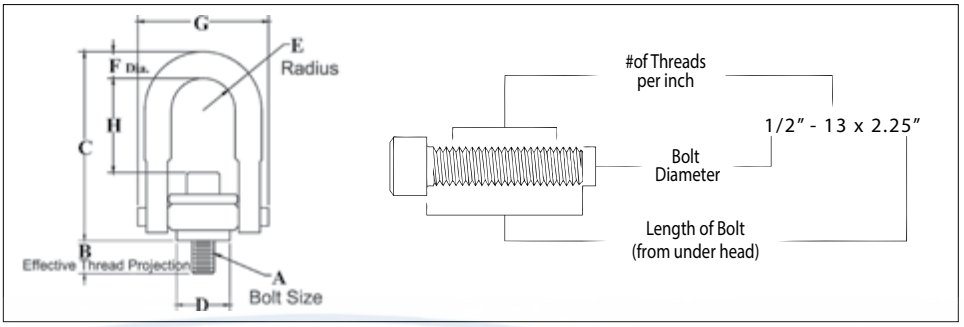

- All components are 316 stainless steel, except bolt retainers, which are made from 15-7 PH (UNS 15700) magnetic stainless steel.
- Rated at 100 percent at 90 degree angle.
- Each product has a Product Identification Code (PIC) for material traceability, along with the Working Load Limit and the name Crosby or "CG" stamped into it.
- Individually proof tested to 2 times the Working Load Limit with certification.
- Fatigue Rated to 20,000 cycles at 1-1/2 times the Working Load Limit.
- Washer is color-coded for easy identification (Red - UNC thread).
- Bolt specification is 316 stainless steel socket head cap screw to ASTM F837 Group 1 (316).
- BOLT SIZE IDENTIFICATION: The size of the bolt will be stated as in the drawing above. Illustration shows meaning of each dimension given.

SS-125UNC Threads

Frame Size No.	Stock No.	Working Load Limit (kg)	Torque (Nm)	Bolt Size A (mm)	Dimensions (mm) Effective Thread Projection Length B	C	D	Radius E	Diameter F	G	H	Weight Each (kg)
1	1065000	181	4.7	5/16 - 18 x 1.0	7.4	67.8	21.6	10.9	8.6	46.7	32.3	0.14
1	1065004	181	4.7	5/16 - 18 x 1.25	13.7	67.8	21.6	10.9	8.6	46.7	32.3	0.14
1	1065008	227	8	3/8 - 16 x 1.25	13.7	67.8	21.6	10.9	8.6	46.7	32.3	0.14
2	1065016	567	19	1/2 - 13 x 2.0	19.8	121	36.8	22.4	17.5	89.4	58.7	1.18
2	1065020	567	19	1/2 - 13 x 2.25	26.2	121	36.8	22.4	17.5	89.4	58.7	1.18
2	1065024	567	19	1/2 - 13 x 2.5	32.5	121	36.8	22.4	17.5	89.4	58.7	1.18
2	1065028	907	41	5/8 - 11 x 2.0	19.8	121	36.8	22.4	17.5	89.4	55.4	1.18
2	1065032	907	41	5/8 - 11 x 2.25	26.2	121	36.8	22.4	17.5	89.4	55.4	1.18
2	1065036	907	41	5/8 - 11 x 2.5	32.5	121	36.8	22.4	17.5	89.4	55.4	1.18
2	1065040	1134	68	3/4 - 10 x 2.25	26.2	121	36.8	22.4	17.5	89.4	52.3	1.36
2	1065044	1134	68	3/4 - 10 x 2.75	38.9	121	36.8	22.4	17.5	89.4	52.3	1.36
3	1065048	1588	68	3/4 - 10 x 2.75	26.4	166	55.9	35.6	23.9	131	77.7	3.18
3	1065052	1588	68	3/4 - 10 x 3.25	39.1	166	55.9	35.6	23.9	131	77.7	3.18
3	1065056	1814	108	7/8 - 9 x 2.75	26.4	166	55.9	35.6	23.9	131	74.4	3.18
3	1065060	1814	108	7/8 - 9 x 3.0	32.8	166	55.9	35.6	23.9	131	74.4	3.18
3	1065064	2268	115	1 - 8 x 3.0	1.29	6.52	2.20	1.40	.94	5.14	2.81	7.5
3	1065068	2268	156	1 - 8 x 3.25	39.1	166	55.9	35.6	23.9	131	71.4	3.40
3	1065072	2268	156	1 - 8 x 4.0	58.2	166	55.9	35.6	23.9	131	71.4	3.4
4	1065080	2268	156	1-1/4 - 7 x 4.0	48.0	222	81	44.5	31.8	165	105	6.35
5	1065084	3402	319	1-1/2 - 6 x 5.5	68.6	317	124	57.2	44.5	217	163	15.4
5	1065088	5443	542	2 - 4.5 x 5.75	75.2	317	124	57.2	44.5	217	150	16.3
6	1065092	6804	746	2-1/2 - 4 x 8.0	102	428	166	76.2	57.2	296	204	39.9
6	1065096	11340	1424	2-1/2 - 8 x 8.0	102	428	166	76.2	57.2	296	204	39.9
7	1065100	11340	1424	3 - 4 x 10.25	127	495	206	95.3	69.9	359	215	75.3
8	1065104	17010	2915	3-1/2 - 4 x 13	178	561	218	102	82.6	404	236	120

5:1 Design Factor.

Load Rated Fatigue Rated

APPLICATION AND WARNING INFORMATION
SECTION 17

Copyright © 2023 The Crosby Group LLC All Rights Reserved

SS-125M

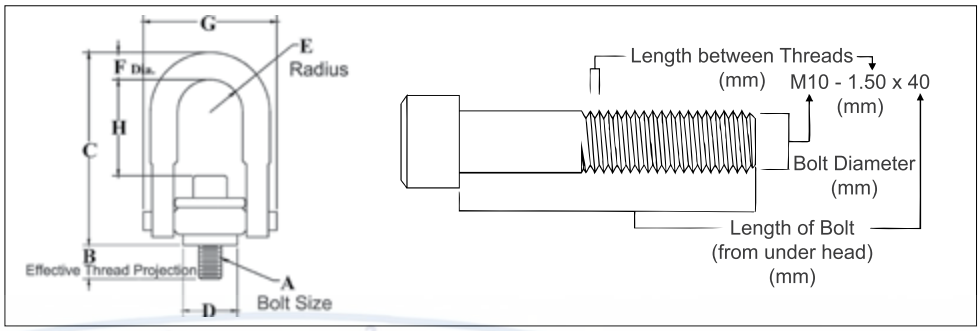

- All components are 316 stainless steel, except bolt retainers, which are made from 15-7 PH (UNS 15700) magnetic stainless steel.
- Rated at 100 percent at 90 degree angle.
- Each product has a Product Identification Code (PIC) for material traceability, along with the Working Load Limit and the name Crosby or "CG" stamped into it.
- Individually proof tested to 2 times the Working Load Limit with certification.
- Fatigue Rated to 20,000 cycles at 1-1/2 times the Working Load Limit.
- Washer is color-coded for easy identification (Silver - Metric thread)).
- Bolt specification is 316 stainless steel socket head cap screw to ASTM F 837M (316).
- BOLT SIZE IDENTIFICATION: The size of the bolt will be stated as in the drawing above. Illustration shows meaning of each dimension given.

SS-125M Metric Threads

Frame Size No.	Stock No.	Working Load Limit (kg)	Torque (Nm)	Dimensions (mm) Bolt Size A	Effective Thread Projection Length B	C	D	Radius E	Diameter F	G	H	Weight Each (kg)
1	1065203	200	4	M8 x 1.25	13	68	21.6	11	8.5	47	32	.17
1	1065207	250	8	M10 x 1.50	18	68	21.6	11	8.5	47	30	.17
2	1065211	525	18	M12 x 1.75	19	121	37	22	17.5	89	60	1.1
2	1065215	950	40	M16 x 2.00	29	121	37	22	17.5	89	56	1.1
2	1065219	1075	68	M20 x 2.50	34	121	37	22	17.5	89	52	1.2
3	1065223	1500	68	M20 x 2.50	32	166	56	36	25	131	78	3.0
3	1065227	2100	108	M24 x 3.00	37	166	56	36	25	131	74	3.1
3	1065231	2100	108	M30 x 3.50	58	206	56	36	25	131	108	3.1
4	1065235	3500	318	M30 x 3.50	42	222	81	45	31	165	106	6.3
4	1065239	3500	318	M30 x 3.50	62	222	81	45	31	165	106	6.4
5	1065243	5500	542	M36 x 4.00	64	317	124	57	43	217	166	15.5
5	1065247	6250	542	M42 x 4.50	82	317	124	57	43	217	160	16.0
5	1065251	6750	542	M48 x 5.00	82	317	124	57	43	217	154	16.8
6	1065255	11150	1423	M64 x 6.00	101	428	165	76	56	296	204	39.0
7	1065259	15750	2915	M72 x 6.00	132	495	206	95	69	359	220	74.0
8	1065263	22300	3459	M90 x 6.00	177	561	216	102	83	404	235	118.0

5:1 Design Factor

Load Proofed Fatigue Rated

APPLICATION AND WARNING INFORMATION
SECTION 17

Copyright © 2023 The Crosby Group LLC All Rights Reserved

Crosby

HR-100UNC

- Forged bail provides the following:
  - Easily readable raised lettering showing the name Crosby or "CG" and PIC for material traceability.
  - More durability provides the increased toughness desired in potentially abusive field conditions.
  - Larger opening than standard hoist ring bails.
- 180 degree pivot action at full capacity.
- Bolts included as part of assembly.
- Individually Proof Tested to 2-1/2 times Working Load Limit.
- UNC Bolt specification is a Grade 8 alloy socket head cap screw to ASTM A574.

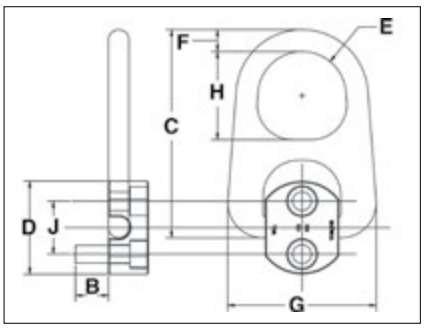

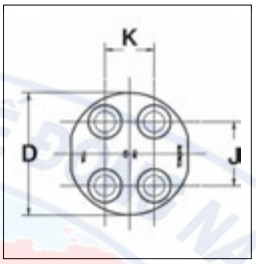

HR-100 Pivot Hoist Rings Coil Threads

Frame Size No.	Stock No.	Working Load Limit (kg)	Torque (Nm)	No. of Bolts	Weight Each (kg)	Bolt Size A (in)	Dimensions (mm) Effective Thread Projection Length B	C	Diameter D	Radius E	F	G	H	J	K
1	1067408	907	10	2	.30	5/16 - 18 x 1.50	20.8	87.1	50.8	15.7	11.2	57.7	35.1	25.4	-
2	1067417	1134	16	2	1.40	3/8 - 16 x 1.50	16.5	153	57.2	31.8	19.1	107	63.5	28.6	-
2	1067426	2268	38	2	1.50	1/2 - 13 x 2.25	35.6	153	66.8	31.8	19.1	107	63.5	38.1	-
3	1067435	5443	38	4	4.80	1/2 - 13 x 2.75	41.9	210	79.5	41.4	25.4	159	82.6	41.3	31.8
4	1067444	9072	81	4	10.0	5/8 - 11 x 2.25	41.9	270	114	50.8	31.8	199	102	52.4	31.8

5:1 Design Factor

Load Tested CE

APPLICATION AND WARNING INFORMATION SECTION 17

S-265

- Widely used on farm machinery, trucks, steel hulled marine vessels and material handling equipment.
- Forged link and bracket — Quenched & Tempered.
- Excellent welding qualities.
- Reference American Welding Society specifications for proper welding procedures.

Q&T

APPLICATION AND WARNING INFORMATION SECTION 17

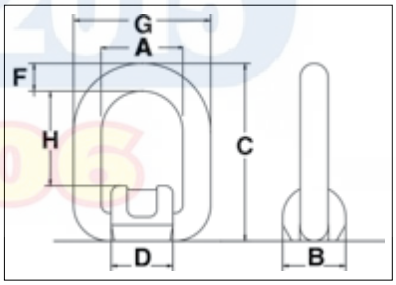

S-265 Forged Link

Working Load Limit (t) Design Factor 5:1	Working Load Limit (t) Design Factor 4:1	Stock No.	Weight Each (kg)	Dimensions (mm) A	B	C	D	F	G	H	Minimum Fillet Weld Size (mm)
1.0	1.2	1290839	0.40	40	36	83	35	13	66	42	3
2.5	3.2	1290848	0.60	45	44	99	42	18	81	48	3
4.2	5.3	1290857	1.20	55	50	123	49	22	99	57	6
6.4	8	1290866	2.40	70	64	144	64	26	122	67	6
12.0	15	1290875	5.90	97	90	193	86	34	165	94	8

Copyright © 2023 The Crosby Group LLC All Rights Reserved

HR-1200

- Body components are alloy steel - Quenched & Tempered.
- Rated at 100% of Working Load Limit for angles up to 90 degrees.
- Each product is stamped with a Product Identification Code (PIC) for material traceability, along with a Working Load Limit, and the name Crosby or "CG."
- Hoist ring body is furnished with a yellow chromate finish for improved corrosion resistance.
- Utilize standard Crosby Red Pin® Shackles to connect to wire rope or synthetic slings (sold separately).
- Multiple bolt lengths available to meet specific application requirements.
- Individually Proof Tested to 2-1/2 times Working Load Limit.

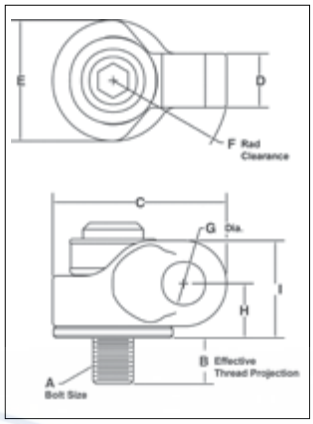

HR-1200 UNC Side Pull Hoist Rings

Weight Each (kg)	Working Load Limit (kg)	Stock No.	Hoist Ring Bolt Torque (Nm	Bolt Size A (in)	Eff. Thread Proj. (mm) B	Dimensions (mm) C	D	E	F	Dia. G	H	I	Recommended Shackles: Shackles 209, 210, 213, 215, 2130, 2150 Nominal Size (in)	WLL (t)	Web Shackles S-281 Web Size (mm)	WLL (t)
.16	290	1067700	10	5/16-18x1.50	15.0	49.0	18.3	25.4	39.6	20.3	21.6	36.3	1/2, 5/8	2, 3-1/4	50	2.95
.16	360	1067704	16	3/8-16x1.50	15.0	49.0	18.3	25.4	39.6	20.3	21.6	36.3	1/2, 5/8	2, 3-1/4	50	2.95
.64	900	1067708	38	1/2-13x2.00	18.0	75.4	24.6	50.8	54.1	23.6	27.2	45.5	5/8, 3/4	3-1/4, 4-3/4	50, 35	2.95, 4.08
.64	900	1067712	38	1/2-13x2.50	30.7	75.4	24.6	50.8	54.1	23.6	27.2	45.5	5/8, 3/4	3-1/4, 4-3/4	50, 35	2.95, 4.08
.68	1360	1067716	81	5/8-11x2.00	18.0	75.4	24.6	50.8	54.1	23.6	27.2	45.5	5/8, 3/4	3-1/4, 4-3/4	50, 35	2.95, 4.08
.68	1360	1067720	81	5/8-11x2.75	37.1	75.4	24.6	50.8	54.1	23.6	27.2	45.5	5/8, 3/4	3-1/4, 4-3/4	50, 35	2.95, 4.08
2.04	2260	1067724	136	3/4-10x2.75	22.9	110	34.0	76.2	76.2	27.2	34.3	61.5	7/8	6-1/2	50	5.67
2.09	2260	1067728	136	3/4-10x3.50	41.9	110	34.0	76.2	76.2	27.2	34.3	61.5	7/8	6-1/2	50	5.67
2.09	2940	1067732	217	7/8-9x2.75	22.9	110	34.0	76.2	76.2	27.2	34.3	61.5	7/8	6-1/2	50	5.67
2.18	2940	1067736	217	7/8-9x3.50	41.9	110	34.0	76.2	76.2	27.2	34.3	61.5	7/8	6-1/2	50	5.67
2.18	3620	1067740	312	1 -8x3.00	29.2	110	34.0	76.2	76.2	27.2	34.3	61.5	7/8	6-1/2	50	5.67
2.27	3620	1067744	312	1 -8x4.00	54.6	110	34.0	76.2	76.2	27.2	34.3	61.5	7/8	6-1/2	50	5.67
4.63	6350	1067748	637	1-1/4-7x4.5	56.4	142	39.9	95.3	99.3	37.3	48.8	86.9	1, 1-1/8, 1-1/4	8-1/2, 9-1/2, 12	75	7.70
10.7	7800	1067756	1085	1-1/2-6x6.5	75.7	186	52.3	121	132	53.6	61.2	109	1-3/8, 1-1/2, 1-3/4	13-1/2, 17, 25	-	-
11.5	13150	1067764	1491	2 -4.5x6.5	75.7	186	52.3	121	132	53.6	61.2	109	1-3/8, 1-1/2, 1-3/4	13-1/2, 17, 25	-	-

5:1 Design Factor.

HR-1200M Metric Side Pull Hoist Rings

Weight Each (kg)	Working Load Limit (kg)	Stock No.	Hoist Ring Bolt Torque (Nm)	Bolt Size A (mm)	Eff. Thread Proj. (mm) B	Dimensions (mm) C	D	E	F	G	H	I	Recommended Shackles: Shackles 209, 210, 213, 215, 2130, 2150 Nominal Size (in)	WLL (t)	Web Shackles S-281 Web Size (mm)	WLL (t)
.18	300	1067803	10	M8x1.25x40	16.9	49.0	18.3	25.4	39.6	20.3	21.6	36.3	1/2, 5/8	2, 3-1/4	50	2.95
.18	400	1067807	16	M10x1.50x40	16.9	49.0	18.3	25.4	39.6	20.3	21.6	36.3	1/2, 5/8	2, 3-1/4	50	2.95
.63	1000	1067811	38	M12x1.75x50	17.2	75.4	24.6	50.8	54.1	23.6	27.2	45.5	5/8, 3/4	3-1/4, 4-3/4	50, 35	2.95, 4.08
.68	1400	1067815	81	M16x2.0x60	27.2	75.4	24.6	50.8	54.1	23.6	27.2	45.5	5/8, 3/4	3-1/4, 4-3/4	50, 35	2.95, 4.08
2.0	2250	1067823	136	M20x2.5x75	28.1	110	34.0	76.2	76.2	27.2	34.4	61.5	7/8	6-1/2	50	5.67
2.2	3500	1067827	312	M24x3.0x80	33.1	110	34.0	76.2	76.2	27.2	34.4	61.5	7/8	6-1/2	50	5.67
4.5	6250	1067831	637	M30x3.5x120	65.1	142	39.9	95.3	99.3	37.3	48.8	86.9	1, 1-1/8,1-1/4	8-1/2, 9-1/2, 12	75	7.70
10.4	7750	1067835	1005	M36x4.0x150	60.6	186	52.3	121	132	53.6	61.2	109	1-3/8, 1-1/2,1-3/4	13-1/2, 17, 25	-	-
10.7	10000	1067839	1005	M42x4.5x160	70.6	186	52.3	121	132	53.6	61.2	109	1-3/8, 1-1/2,1-3/4	13-1/2, 17, 25	-	-
11.0	13000	1067843	1350	M48x5.0x160	70.6	186	52.3	121	132	53.6	61.2	109	1-3/8, 1-1/2,1-3/4	13-1/2, 17, 25	-	-

5:1 Design Factor.

Load Tested CE

APPLICATION AND WARNING INFORMATION
SECTION 17

Copyright © 2023 The Crosby Group LLC All Rights Reserved

Crosby

SL-150

- When compared to respective size eye bolts, the Crosby SL-150 Slide-Loc™ has a larger eye opening for easy access.
- Bail is forged alloy steel – Quenched & Tempered.
- Bail swivels 360° degrees to keep the load aligned with the sling leg.
- Rated at 100% for 90 degree angle.
- Fatigue rated to 20,000 cycles at 1-1/2 times the Working Load Limit.
- Meets the Machinery Directive 2006/42/EC guidelines and is marked with CE accordingly.
- Bolt specification for metric bolt is Grade 10.9 alloy cap screw to ISO 898-1.
- Unique locking mechanism makes the lifting point well suited for quick attachment to load surface. No need for tools.
- Features QUIC-CHECK® markings on bail to assist in knowing when device is ready for lifting.

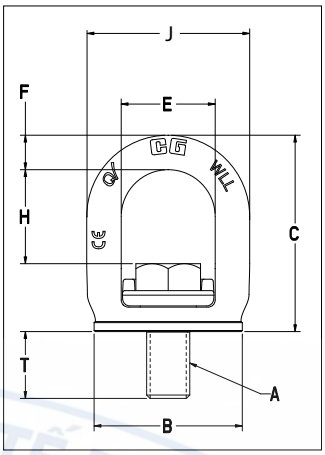

APPLICATION AND WARNING INFORMATION
SECTION 17

SL-150 UNC SLIDE-LOC™ LIFT POINT

Weight Each (kg)	Stock No.	Working Load Limit (t)*	Bolt Size A (in)	Dimensions (mm) B	C	E	F	H	J	Effective Thread Projection Length T
0.14	1068407	0.50	3/8 - 16 x 1	35.6	53.1	27.9	8.4	28.2	45.0	15.2
0.24	1068416	0.75	1/2 - 13 x 1 - 1/4	42.4	62.7	33.0	10.4	33.0	54.1	20.1
0.50	1068425	1.50	5/8 - 11 x 1 - 5/8	55.1	75.7	37.1	13.2	37.1	63.5	25.7
0.93	1068434	2.30	3/4 - 10 x 2	68.8	91.2	43.7	16.0	43.7	75.7	32.0
0.98	1068443	2.30	7/8 - 9 x 2	68.8	91.7	43.7	16.0	43.7	75.7	31.2
1.69	1068452	3.20	1 - 8 x 2 - 1/2	82.6	110.0	52.8	19.3	49.0	91.2	40.4

4:1 Design Factor.

SL-150 METRIC SLIDE-LOC™ LIFT POINT

Weight Each (kg)	Stock No.	Working Load Limit (t)*	Bolt Size A	Dimensions (mm) B	C	E	F	H	J	Effective Thread Projection Length T
0.14	1068515	0.50	M10X1.5 X 25	35.5	53.0	28.0	8.5	27.8	45.0	14.6
0.23	1068524	0.75	M12x1.75x30	42.5	62.6	33.0	10.5	32.9	54.0	18.3
0.50	1068533	1.50	M16x2x40	55.0	75.7	37.0	13.2	37.0	63.4	24.5
0.94	1068542	2.30	M20x2.5x50	68.8	91.1	43.9	16.0	43.6	75.6	31.0
1.60	1068551	3.20	M24x3x60	82.5	110.0	52.8	19.2	52.8	91.2	37.0

4:1 Design Factor.

INSTALLATION POSITION

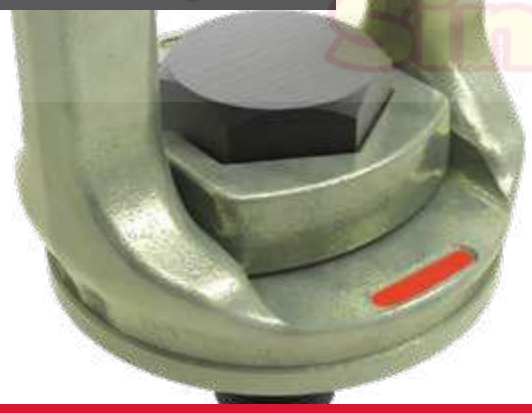

LIFTING POSITION

The visible red QUIC-CHECK® mark indicates that the Crosby Slide-Loc™ is ready for installation but not for lifting.

QUIC-CHECK®

When the red QUIC-CHECK® mark is under the slide, the Crosby Slide-Loc™ is ready for lifting.

Copyright © 2023 The Crosby Group LLC All Rights Reserved

The Lifting Point Family

We offer a wide range of lifting points that will fit most lifting and lashing applications. In our lifting point family you will find a full system, from master link to lifting point.

Choosing the right lifting point for your operation can be tricky, most lifting points can be used for a lot of purposes. But in order to give some guidance, and what we consider best practice, we have created a cross-chart (as seen on next page) to be used as indication to which lifting point that might be best suited for your specific purpose.

Rotating Eye Lifting Point - RELP

The RELP is a compact and robust lifting point, ideal for top-mounting and when it is important to have quick and easy on-hooking. The lifting point is easy to assemble/disassemble with a standard allen key. On the bolt itself information such as the working load limit, mounting torque and manufacturing ID is stamped, so it is always available for the operator.

The RELP will automatically adjust to the loading direction which decreases the risk to load it incorrectly and endangering the lifting operation. For sensitive load surfaces the RELP is ideal, as the connecting sling hook will be positioned mainly parallel to the load surface, thus completely avoiding the hook causing damage on impact on the load. CE marked.

Rotating Lifting Point - RLP

The RLP has an easily dismountable D-ring to enable assembly of wiresling, master link or hook directly onto the lifting point.

RLP has a hexagon bolt (RFID prepared) to make it easy to disassemble/assemble with a wrench. The bolt is also clearly marked with information such as working load limit, mounting torque and manufacturer ID so it is always available to the operator. The RLP rotates 360° and pivots 180°, making it strong, flexible and reliable. CE marked.

De-centered Lifting Point - DLP

The design of the DLP allows the link to be folded over the housing when idle, allowing the lifting point to be almost completely stowed away when not in use.

The closed, oblong link is also equipped with a “stay-up”-function for easy on-hooking, (sizes up to M24) especially when there is limited space. This saves both the load from damage due to impacts from the hook, as well as making rigging fast and easy. The DLP is ideal in narrow spaces, such as corners or edge position, as the housing has a compact design.

DLP has a hexagon bolt (RFID prepared) to make it easy to disassemble/assemble with a wrench. The bolt is also clearly marked with information such as working load limit, mounting torque and manufacturer ID so it is always available to the operator. CE marked.

Ball-bearing Lifting Point - BLP

The BLP is a very versatile lifting point and can safely be used for most applications. The ball-bearings in the BLP allow the load to be rotated during the lift, which is especially good when maintenance is needed on heavy tools and other types of equipment.

If the load surface is sensitive to impacts or scratches, the BLP is a good choice as it builds out from the load which makes it less likely that the lifting equipment will come in contact with it causing damage. The housing (RFID prepared) of the BLP is in-house drop-forged for increased strength and has a hexagon shape for easy mounting and dismounting. The housing is also clearly marked with information such as working load limit, mounting torque and manufacturer ID so it is always available to the operator. CE marked.

Copyright © 2022 The Crosby Group LLC All Rights Reserved

GUNNEBO Industries

	RELP	RLP	DLP	BLP
Tight space	✓		✓	✓
Limited height (effective length)	✓	✓		
Vertical lift	✓	✓		✓
Angular lift		✓	✓	✓
Vertical rotation under load				✓
Tilting under load		✓	✓	✓
Sensitive load surface				✓
Single part lift	✓	✓		✓
Multiple part lift		✓	✓	✓
Integrated combination (hook or link)		✓		
RFID prepared		✓	✓	✓

This chart is intended to give guidance in choosing the right lifting point for your operation and is not rules for usage.
For more advice contact your closest Gunnebo Industries dealer.

CÔNG TY CỔ PHẦN PHÁT TRIỂN ĐẦU TƯ ASEAN NAMÁ
ASEAN JSC.VN
ASEAN DEVELOPMENT JOINT STOCK COMPANY
ISO 9001:2015
Since 2006

Copyright © 2022 The Crosby Group LLC All Rights Reserved

Rotating Eye Lifting Point RELP

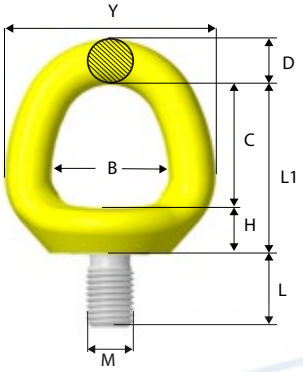

Stock No.	Code	Dimensions (mm)										Weight (kg)
		B	C	D	E	H	L	L1	M	Y	Z	
Z102408	RELP-M8 x 1.25	28	28	11	40	14	15	42	8	50	29	0.2
Z102410	RELP-M10 x 1.5	28	28	11	40	14	15	42	10	50	29	0.2
Z102412	RELP-M12 x 1.75	32	33	13	46	13	20	47	12	58	38	0.3
Z102416	RELP-M16 x 2	39	41	15	53	16	24	57	16	70	40	0.5
Z102420	RELP-M20 x 2.5	42	43	16	60	18	30	60	20	78	46	0.7
Z102424	RELP-M24 x 3	50	51	19	68	20	36	71	24	88	44	1.1
Z102430	RELP-M30 x 3.5	60	62	26	85	28	45	90	30	112	64	2.4
Z102436	RELP-M36 x 4	72	72	32	97	32	54	104	36	136	74	4.1
Z102442	RELP-M42 x 4.5	82	82	38	120	37	63	119	42	158	91	6.7
Z102448	RELP-M48 x 5	94	96	43	142	39	72	135	48	180	102	9.9

Bolt according to: ISO 898-1 Class 10.9

RELP with UNC thread

Stock No.	Code	Dimensions (mm)									M (in)	Weight (kg)
		B	C	D	E	H	L	L1	Y	Z		
Z102508	RELP 5/16”-18 UNC	28	28	11	40	14	15	42	50	29	5/16”	0.2
Z102510	RELP 3/8”-16 UNC	28	28	11	40	14	15	42	50	29	3/8”	0.2
Z102512	RELP 1/2”-13 UNC	32	33	13	46	13	20	47	58	38	1/2”	0.3
Z102516	RELP 5/8”-11 UNC	39	41	15	53	16	24	57	70	40	5/8”	0.5
Z102520	RELP 3/4”10 UNC	42	43	16	60	18	30	60	78	46	3/4”	0.7
Z102521	RELP 7/8”-9 UNC	42	43	16	60	18	30	60	78	46	7/8”	0.7
Z102524	RELP 1”-8 UNC	50	51	19	68	20	36	71	88	44	1”	1.1
Z102530	RELP 1 1/4”-7 UNC	60	62	26	85	28	45	90	112	64	1 1/4”	2.4
Z102536	RELP 1 1/2”-6 UNC	72	72	32	97	32	54	104	136	74	1 1/2”	4.1
Z102542	RELP 1 3/4”-5 UNC	82	82	38	120	37	63	119	158	91	1 3/4”	6.8
Z102548	RELP 2”-4.5 UNC	94	96	43	142	39	72	135	180	102	2”	10.0

Bolt according to: ISO 898-1 Class 10.9

Working Load Limits* - RELP

Symmetric Load (tonnes)	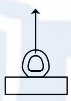		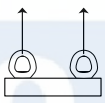	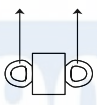	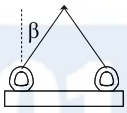	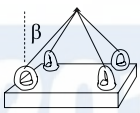				
No. of Legs	1	1	2	2	2 symmetric		3 & 4 symmetric			
Angle ß	0°	90°	0°	90°	0 - 45°	45°- 60°	0 - 45°	45° - 60°	Tightening Torque	Allen Key
RELP -M8 x 1.25	0.7	0.3	1.4	0.7	0.4	0.3	0.6	0.4	10 Nm	8 mm
RELP 5/16”-18 UNC	0.7	0.3	1.4	0.7	0.4	0.3	0.6	0.4	7Ft.Lbs	5/16” UNC
RELP-M10x1,5	1.2	0.5	2.4	1.0	0.7	0.5	1.0	0.7	15 Nm	8 mm
RELP 3/8”-16 UNC	1.2	0.5	2.4	1.0	0.7	0.5	1.0	0.7	11Ft.Lbs	5/16” UNC
RELP - M12x1,75	2.0	0.8	4.0	1.6	1.1	0.8	1.6	1.2	27 Nm	8 mm
RELP 1/2”-13 UNC	2.0	0.8	4.0	1.6	1.1	0.8	1.6	1.2	20Ft.Lbs	5/16” UNC
RELP - M16x2	3.5	1.5	7.0	3.0	2.1	1.5	3.1	2.2	60 Nm	8 mm
RELP 5/8”-11 UNC	3.5	1.5	7.0	3.0	2.1	1.5	3.1	2.2	44Ft.Lbs	5/16” UNC
RELP - M20x2,5	6.1	2.4	12.2	4.8	3.3	2.4	5.0	3.6	90 Nm	8 mm
RELP 3/4”-10 UNC	5.0	2.3	10.0	4.6	3.1	2.3	4.8	3.4	66Ft.Lbs	5/16” UNC
RELP 7/8”-9 UNC	6.1	2.9	12.2	5.8	4.1	2.9	6.1	4.3	66Ft.Lbs	5/16” UNC
RELP - M24x3	8.1	3.3	16.2	6.6	4.6	3.3	6.9	4.9	135 Nm	19 mm
RELP 1”-8 UNC	8.1	3.3	16.2	6.6	4.6	3.3	6.9	4.9	100Ft.Lbs	3/4” UNC
RELP - M30x3,5	12.1	4.6	24.2	9.2	6.4	4.6	9.6	6.9	270 Nm	19 mm
RELP 1 1/4”-7 UNC	12.1	4.6	24.2	9.2	6.4	4.6	9.6	6.9	200Ft.Lbs	3/4” UNC
RELP - M36x4	16.1	7.1	32.2	14.2	9.9	7.1	14.9	10.6	320 Nm	19 mm
RELP 1 1/2”-6 UNC	16.1	7.1	32.2	14.2	9.9	7.1	14.9	10.6	236Ft.Lbs	3/4” UNC
RELP - M42x4,5	24	9.1	48	18.2	12.7	9.1	19.1	13.6	600 Nm	19 mm
RELP 1 3/4”-5 UNC	24	9.1	48	18.2	12.7	9.1	19.1	13.6	440Ft.Lbs	3/4” UNC
RELP - M48x5	32	12.1	64	24.2	16.9	12.1	25.4	18.1	800 Nm	19 mm
RELP 2”-4,5 UNC	32	12.1	64	24.2	16.9	12.1	25.4	18.1	590Ft.Lbs	3/4” UNC

*4:1 Design Factor.

Copyright © 2022 The Crosby Group LLC All Rights Reserved

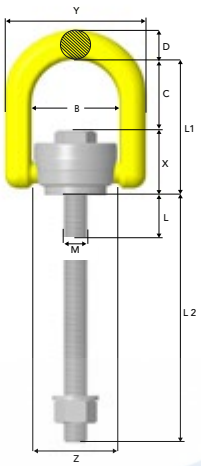

Rotating Lifting Point RLP

Stock No. Standard Bolt Length	L (mm)	Stock No. Long Bolt Length**	L2 (mm)	Code	Dimensions (mm)								Weight (kg)***
					B	C	D	L1	M	X	Y	Z	
Z101708	16	Z1017080L	101	RLP-M8 x 1.25	42	35	12	62	8	27	64	Ø40	0.3
Z101710	16	Z1017100L	101	RLP -M10 x 1.5	42	35	12	62	10	27	64	Ø40	0.3
Z101712	25	Z1017120L	120	RLP -M12 x 1.75	57	46	19	88	12	42	91	Ø54	1.0
Z101716	25	Z1017160L	160	RLP-M16 x 2	57	46	19	88	16	42	91	Ø54	1.0
Z101720	36	Z1017200L	200	RLP-M20 x 2.5	83	55	28	110	20	55	133	Ø80	2.9
Z101724	36	Z1017240L	240	RLP-M24 x 3	83	55	28	110	24	55	133	Ø80	2.9
Z101730	58	Z1017300L	300	RLP-M30 x 3.5	114	70	34	148	30	78	182	Ø111	7.1
Z101736	58	Z1017360L	300	RLP-M36 x 4	114	70	34	148	36	78	182	Ø111	7.3
Z101742	81	Z1017420L	301	RLP-M42 x 4.5	149	91	40	190	42	99	229	Ø142	14.3
Z101748	81	Z1017480L	301	RLP-M48 x 5	149	91	40	190	48	99	229	Ø142	14.5

** Long Bolt supplied with nut and washer. *** Weight is calculated with standard bolt length.
Bolt, nut and washer according to: ISO 898-1 Class 10.9

RLP with UNC thread

Stock No. Standard Bolt Length	L (mm)	Stock No. Long Bolt Length**	L2 (mm)	Code	Dimensions (mm)							M (in)	Weight (kg)***
					B	C	D	L1	X	Y	Z		
Z101808	16	Z1018080L	101	RLP-5/16”-18 UNC	42	35	12	62	27	64	Ø40	5/16”	0.3
Z101810	16	Z1018100L	101	RLP-3/8”-16 UNC	42	35	12	62	27	64	Ø40	3/8”	0.3
Z101812	25	Z1018120L	120	RLP-1/2”-13 UNC	57	46	19	88	42	91	Ø54	1/2”	1.0
Z101816	25	Z1018160L	160	RLP-5/8”-11 UNC	57	46	19	88	42	91	Ø54	5/8”	1.0
Z101820	36	Z1018200L	200	RLP-3/4”-10 UNC	83	55	28	110	55	133	Ø80	3/4”	2.9
Z101821	36	Z1018210L	200	RLP-7/8”-9 UNC	83	55	28	110	55	133	Ø80	7/8”	2.9
Z101824	36	Z1018240L	240	RLP 1”-8 UNC	83	55	28	110	55	133	Ø80	1”	2.9
Z101830	58	Z1018300L	300	RLP 1 1/4”-7 UNC	114	70	34	148	78	182	Ø111	1 1/4”	7.1
Z101836	58	Z1018360L	300	RLP 1 1/2”-6 UNC	114	70	34	148	78	182	Ø111	1 1/2”	7.3
Z101842	81	Z1018420L	301	RLP 1 3/4”-5 UNC	149	91	40	190	99	229	Ø142	1 3/4”	14.4
Z101848	81	Z1018480L	301	RLP 2” -4.5 UNC	149	91	40	190	99	229	Ø142	2”	14.7

** Long Bolt supplied with nut and washer. *** Weight is calculated with standard bolt length.
Bolt, nut and washer according to: ISO 898-1 Class 10.9

Working Load Limits* - RLP

Symmetric Load (tonnes)					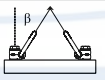	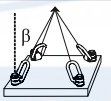				
No. of Legs	1	1	2	2	2 Symmetric		3 & 4 Symmetric			
Angle ß	0°	90°	0°	90°	0 - 45°	45° - 60°	0 - 45°	45° - 60°	Tightening Torque	Spanner Size
RLP - M8 x 1.25	0.8	0.4	1.6	0.8	0.5	0.4	0.8	0.6	10 Nm	13 mm
RLP 5/16”-18 UNC	0.8	0.4	1.6	0.8	0.5	0.4	0.8	0.6	7 Ft.lb	1/2”
RLP - M10 x 1.5	1.2	0.7	2.4	1.4	0.9	0.7	1.4	1.0	15 Nm	13 mm
RLP 3/8”-16 UNC	1.2	0.65	2.4	1.3	0.9	0.6	1.3	0.9	11 Ft.lb	1/2”
RLP - M12 x 1.75	2.0	1.2	4.0	2.4	1.6	1.2	2.5	1.8	27 Nm	24 mm
RLP 1/2”-13 UNC	2.0	1.2	4.0	2.4	1.6	1.2	2.5	1.8	20 Ft.lb	15/16”
RLP - M16 x 2	3.2	2.0	6.4	4.0	2.8	2.0	4.2	3.0	60 Nm	24 mm
RLP 5/8”-11 UNC	3.2	2.0	6.4	4.0	2.8	2.0	4.2	3.0	44 Ft.lb	15/16”
RLP - M20 x 2.5	5.6	2.8	11.2	5.6	3.9	2.8	5.8	4.2	90 Nm	32 mm
RLP 3/4”-10 UNC	5.0	2.5	10.0	5.0	3.5	2.5	5.2	3.7	66 Ft.lb	1 5/16”
RLP 7/8”-9 UNC	5.6	2.8	11.2	5.6	3.9	2.8	5.8	4.2	66 Ft.lb	1 5/16”
RLP - M24 x 3	8.0	4.6	16.0	9.2	6.4	4.6	9.6	6.9	135 Nm	32 mm
RLP 1”-8 UNC	8.0	4.6	16.0	9.2	6.4	4.6	9.6	6.9	100 Ft.lb	1 5/16”
RLP - M30 x 3.5	12.0	6.0	24.0	12.0	8.4	6.0	12.6	9.0	270 Nm	55 mm
RLP 1 1/4”-7 UNC	12.0	6.0	24.0	12.0	8.4	6.0	12.6	9.0	200 Ft.lb	2 1/4”
RLP - M36 x 4	14.0	8.0	28.0	16.0	11.2	8.0	16.8	12.0	320 Nm	55 mm
RLP 1 1/2”-6 UNC	14.0	8.0	28.0	16.0	11.2	8.0	16.8	12.0	236 Ft.lb	2 1/4”
RLP - M42 x 4.5	16.0	14.0	32.0	28.0	19.6	14.0	29.4	21.0	600 Nm	75 mm
RLP 1 3/4”-5 UNC	16.0	14.0	32.0	28.0	19.6	14.0	29.4	21.0	440 Ft.lb	3”
RLP - M48 x 5	20.0	16.0	40.0	32.0	22.4	16.0	33.6	24.0	800 Nm	75 mm
RLP 2” -4.5 UNC	20.0	16.0	40.0	32.0	22.4	16.0	33.6	24.0	590 Ft.lb	3”

*4:1 Design Factor.

Disassembly of the RLP is made easy by just folding the D-ring forward and push down.

Copyright © 2022 The Crosby Group LLC All Rights Reserved

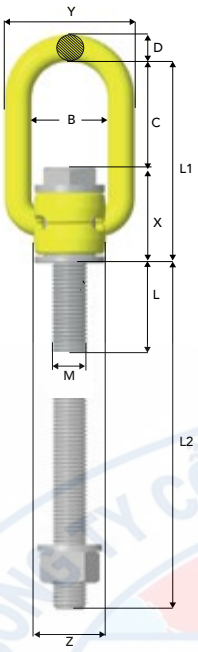

De-centered Lifting Point DLP

Stock No. Standard Bolt Length	L (mm)	Stock No. Long Bolt Length**	L2 (mm)	Code	Dimensions (mm)											Weight (kg)***
					B	C	D	E	F	G	L1	M	X	Y	Z	
Z102208	13	Z1022080L	97.5	DLP-M8 x 1.25	35	48	10	39	14	10	78	8	30	55	26	0.3
Z102210	13	Z1022100L	97.5	DLP -M10 x 1.5	35	48	10	39	14	10	78	10	30	55	26	0.3
Z102212	23	Z1022120L	118	DLP -M12 x 1.75	35	48	12	51	20	14	91	12	44	59	32	0.5
Z102216	23	Z1022160L	158	DLP-M16 x 2	35	48	12	51	20	14	91	16	44	59	32	0.5
Z102220	34	Z1022200L	198	DLP-M20 x 2.5	54	88	18	71	28	18	145	20	58	90	48	1.6
Z102224	34	Z1022240L	238	DLP-M24 x 3	54	88	18	71	28	18	145	24	58	90	48	1.7
Z102230	53	Z1022300L	295	DLP-M30 x 3.5	82	94	26	104	39	27	182	30	88	122	75	5.0
Z102236	53	Z1022360L	295	DLP-M36 x 4	82	94	26	104	39	27	182	36	88	122	75	5.2
Z102242	73	Z1022420L	293	DLP-M42 x 4.5	100	104	36	136	54	34	216	42	113	156	110	11.6
Z102248	73	Z1022480L	293	DLP-M48 x 5	100	103	36	136	54	34	216	48	113	156	110	11.9

** Long Bolt supplied with nut and washer. *** Weight is calculated with standard bolt length.
Bolt, nut and washer according to: ISO 898-1 Class 10.9

DLP with UNC thread

Stock No. Standard Bolt Length	L (mm)	Stock No. Long Bolt Length**	L2 (mm)	Code	Dimensions (mm)										M (in)	Weight (kg)***
					B	C	D	E	F	G	L1	X	Y	Z		
Z102308	13	Z1023080L	97.5	DLP-5/16”-18 UNC	35	48	10	39	14	10	78	30	55	26	5/16”	0.3
Z102310	13	Z1023100L	97.5	DLP-3/8”-16 UNC	35	48	10	39	14	10	78	30	55	26	3/8”	0.3
Z102312	23	Z1023120L	118	DLP-1/2”-13 UNC	35	48	12	51	20	14	91	44	59	32	1/2”	0.5
Z102316	23	Z1023160L	158	DLP-5/8”-11 UNC	35	48	12	51	20	14	91	44	59	32	5/8”	0.5
Z102320	34	Z1023200L	198	DLP-3/4”-10 UNC	54	88	18	71	28	18	145	58	90	48	3/4”	1.6
Z102321	34	Z1023210L	198	DLP-7/8”-9 UNC	54	88	18	71	28	18	145	58	90	48	7/8”	1.6
Z102324	34	Z1023240L	238	DLP-1”-8 UNC	54	88	18	71	28	18	145	58	90	48	1”	1.7
Z102330	53	Z1023300L	295	DLP- 1 1/4”-7 UNC	82	94	26	104	39	27	182	88	122	75	1 1/4”	5.5
Z102336	53	Z1023360L	295	DLP-1 1/2”-6 UNC	82	94	26	104	39	27	182	88	122	75	1 1/2”	5.7
Z102342	73	Z1023420L	293	DLP-1 3/4”-5 UNC	100	103	36	136	54	34	216	113	156	110	1 3/4”	11.7
Z102348	73	Z1023480L	293	DLP-2”- 4.5 UNC	100	103	36	136	54	34	216	113	156	110	2”	12.1

** Long Bolt supplied with nut and washer. *** Weight is calculated with standard bolt length.
Bolt, nut and washer according to: ISO 898-1 Class 10.9

Working Load Limits* - DLP

Symmetric Load (tonnes) / No. of Legs	1	2			2 Symmetric		3 & 4 Symmetric		
Angle ß	0°< ß < 90°	0°< ß < 90°	0 - 45°	45° - 60°	0 - 45°	45° - 60°	Tightening Torque	Spanner Size
DLP-M8	0.35	0.70	0.5	0.35	0.7	0.5	10 Nm	13 mm
DLP-5/16”-18 UNC	0.35	0.70	0.5	0.35	0.7	0.5	7Ft.lb	1/2”
DLP -M10	0.65	1.30	0.9	0.65	1.4	1.0	15 Nm	13 mm
DLP-3/8”-16 UNC	0.60	1.20	0.8	0.60	1.3	0.9	11Ft.lb	1/2”
DLP -M12	1.0	2.0	1.4	1.0	2.1	1.5	27 Nm	24 mm
DLP-1/2”-13 UNC	1.0	2.0	1.4	1.0	2.1	1.5	20Ft.lb	15/16”
DLP-M16	1.8	3.6	2.5	1.8	3.7	2.7	60 Nm	24 mm
DLP-5/8”-11 UNC	1.6	3.2	2.2	1.6	3.3	2.4	44Ft.lb	15/16”
DLP - M20x2.5	2.6	5.2	3.6	2.6	5.4	3.9	90 Nm	32 mm
DLP 3/4”-10 UNC	2.2	4.4	3.0	2.2	4.6	3.3	66Ft.lb	1 5/16”
DLP 7/8”-9 UNC	2.6	5.2	3.6	2.6	5.4	3.9	66Ft.lb	1 5/16”
DLP - M24x3	4.1	8.2	5.7	4.1	8.6	6.1	135 Nm	32 mm
DLP 1”-8 UNC	4.1	8.2	5.7	4.1	8.6	6.1	100Ft.lb	1 5/16”
DLP - M30x3.5	5.0	10.0	7.0	5.0	10.5	7.5	270 Nm	55 mm
DLP 1 1/4"-7 UNC	5.0	10.0	7.0	5.0	10.5	7.5	200Ft.lb	2 1/4"
DLP - M36x4	7.0	14.0	9.8	7.0	14.7	10.5	320 Nm	55 mm
DLP 1 1/2"-6 UNC	7.0	14.0	9.8	7.0	14.7	10.5	236Ft.lb	2 1/4"
DLP - M42x4.5	15.0	30.0	21.0	15.0	31.5	22.5	600 Nm	75 mm
DLP 1 3/4"-5 UNC	15.0	30.0	21.0	15.0	31.5	22.5	440Ft.lb	3"
DLP - M48x5	20.0	40.0	28.0	20.0	42.0	30.0	800 Nm	75 mm
DLP 2"-4.5 UNC	20.0	40.0	28.0	20.0	42.0	30.0	590Ft.lb	3"

*4:1 Design Factor.

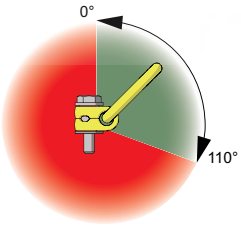

- The DLP can only be loaded from 0° to 110° degrees
- Rotation around screw axis when loaded at 0°-15° is not allowed.

Copyright © 2022 The Crosby Group LLC All Rights Reserved

GUNNEBO Industries

Ball-bearing Lifting Point BLP

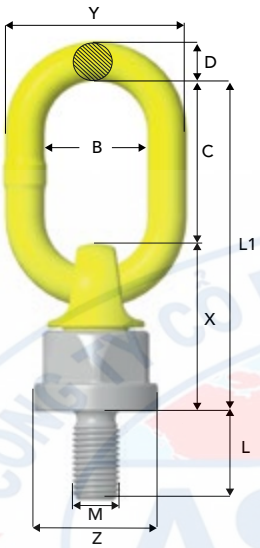

Stock No.	Code	Dimensions (mm)									Weight (kg)
		B	C	D	L	L1	M	X	Y	Z	
Z102008	BLP-M8 x 1.25	35	55	13	16	112	8	57	62	Ø42	0.6
Z102010	BLP -M10 x 1.5	35	55	13	20	112	10	57	61	Ø42	0.6
Z102012	BLP -M12 x 1.75	35	55	13	24	112	12	57	61	Ø42	0.6
Z102016	BLP-M16 x 2	35	55	13	30	112	16	57	61	Ø42	0.6
Z102020	BLP-M20 x 2.5	34	51	17	30	126	20	75	67	Ø59	1.3
Z102024	BLP-M24 x 3	50	70	17	36	145	24	75	84	Ø59	1.5
Z102030	BLP-M30 x 3.5	54	96	22	45	102	30	106	99	Ø74	3.4
Z102036	BLP-M36 x 4	54	96	22	54	102	36	106	99	Ø74	3.5
Z102042	BLP-M42 x 4.5	70	120	28	63	242	42	122	127	Ø93	6.5
Z102048	BLP-M48 x 5	70	120	28	72	242	48	122	127	Ø93	6.8

BLP with UNC thread

Stock No.	Code	Dimensions (mm)								M	Weight (kg)
		B	C	D	L	L1	X	Y	Z		
Z102108	BLP-5/16”-18 UNC	35	55	13	16	112	57	61	Ø42	5/16"	0.6
Z102110	BLP-3/8”-16 UNC	35	55	13	20	112	57	61	Ø42	3/8"	0.6
Z102112	BLP-1/2”-13 UNC	35	55	13	24	112	57	61	Ø42	1/2"	0.6
Z102116	BLP-5/8”-11 UNC	35	55	13	30	112	57	61	Ø42	5/8"	0.6
Z102120	BLP-3/4”-10 UNC	34	51	17	30	126	75	67	Ø59	3/4"	1.3
Z102121	BLP-7/8”-9 UNC	50	51	17	30	126	75	67	Ø59	7/8"	1.3
Z102124	BLP-1”-8 UNC	54	70	17	38	145	75	84	Ø59	1”	1.5
Z102130	BLP-1 1/4”-7 UNC	54	96	22	48	202	106	99	Ø74	1 1/4”	3.4
Z102136	BLP-1 1/2”-6 UNC	70	96	22	57	202	106	99	Ø74	1 1/2”	3.6
Z102142	BLP-1 3/4”-5 UNC	70	120	28	67	242	122	127	Ø93	1 3/4”	6.6
Z102148	BLP-2”-4.5 UNC	70	120	28	76	242	122	127	Ø93	2”	7.0

Working Load Limits* - BLP

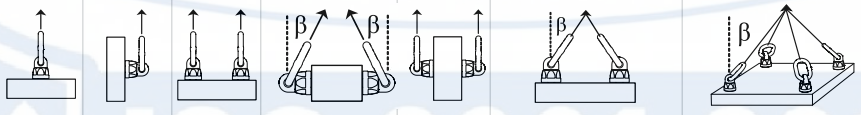

Symmetric Load (tonnes)											
No. of Legs	1	1	2	2	2	2 Symmetric		3 & 4 Symmetric			
Angle ß	0°*	90°	0°	0 - 45°	90°	0 - 45°	45° - 60°	0 - 45°	45° - 60°	Tightening torque	Spanner Size
BLP -M8x1.25	0.6	0.3	1.2	0.4	0.6	0.4	0.3	0.6	0.45	10 Nm	36 mm
BLP 5/16”-18 UNC	0.6	0.3	1.2	0.4	0.6	0.4	0.3	0.6	0.45	7Ft.Lb	1 1/2” UNC
BLP -M10x1.5	1.0	0.5	2.0	0.7	1.0	0.7	0.5	1.3	0.75	15 Nm	36 mm
BLP 3/8”-16 UNC	0.8	0.4	1.6	0.5	0.8	0.5	0.4	0.8	0.6	11Ft.Lb	1 1/2” UNC
BLP -M12x1.75	1.5	0.75	3.0	1.1	1.5	1.1	0.75	1.5	1.1	27 Nm	36 mm
BLP 1/2”-13 UNC	1.5	0.75	3.0	1.1	1.5	1.1	0.75	1.5	1.1	20Ft.Lb	1 1/2” UNC
BLP -M16x2	3.0	1.5	6.0	2.1	3.0	2.1	1.5	3.1	2.2	60 Nm	36 mm
BLP 5/8”-11 UNC	3.0	1.5	6.0	2.1	3.0	2.1	1.5	3.1	2.2	44Ft.Lb	1 1/2” UNC
BLP -M20x2.5	5.0	2.5	10.0	3.5	5.0	3.5	2.5	5.2	3.7	90 Nm	50 mm
BLP 3/4”-10 UNC	4.5	2.25	9.0	3.1	4.5	3.1	2.25	4.7	3.3	66Ft.Lb	2” UNC
BLP 7/8”-9 UNC	6.0	3.0	12.0	4.2	6.0	4.2	3.0	6.3	4.5	66Ft.Lb	2” UNC
BLP-M24x3	7.0	4.0	14.0	5.6	8.0	5.6	4.0	8.4	6.0	135 Nm	50 mm
BLP-1”-8 UNC	7.0	4.0	14.0	5.6	8.0	5.6	4.0	8.4	6.0	100Ft.Lb	2” UNC
BLP-M30x3.5	12.0	6.0	24.0	8.4	12.0	8.4	6.0	12.6	9.0	270 Nm	65 mm
BLP-1 1/4”-7 UNC	12.0	6.0	24.0	8.4	12.0	8.4	6.0	12.6	9.0	200Ft.Lb	2 5/8" UNC
BLP-M36x4	14.0	8.0	28.0	11.2	16.0	11.2	8.0	16.8	12.0	320 Nm	65 mm
BLP-1 1/2”-6 UNC	14.0	8.0	28.0	11.2	16.0	11.2	8.0	16.8	12.0	236Ft.Lb	2 5/8" UNC
BLP-M42x4.5	16.0	10.0	32.0	14.0	20.0	14.0	10.0	21.0	15.0	600 Nm	85 mm
BLP-1 3/4”-5 UNC	16.0	10.0	32.0	14.0	20.0	14.0	10.0	21.0	15.0	440Ft.Lb	3 1/8" UNC
BLP-M48x5	18.0	13.0	36.0	18.2	26.0	18.2	13.0	27.3	19.5	800 Nm	85 mm
BLP-2”-4.5 UNC	18.0	13.0	36.0	18.2	26.0	18.2	13.0	27.3	19.5	590Ft.Lb	3 1/8" UNC

* provided only axial loading takes place, ie no bending force applied in the direction of the thread. 4:1 Design Factor.

Copyright © 2022 The Crosby Group LLC All Rights Reserved

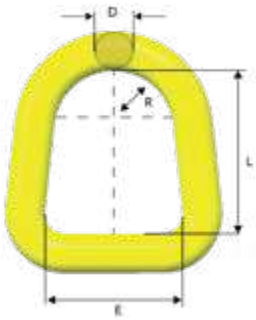

Master Link D

Stock No.	Code	WLL (t)	Dimensions (mm)				Weight (kg)
			E	D	L	R	
Z7008771	D-14-10	2.5	55	14	65	24	0.4
Z7008781	D-17-10	4.0	64	17	62	29	0.5
Z7008801	D-22-10	7.0	76	22	90	33	1.0
Z7008791	D-27-10	10.0	85	27	98	38	1.9
Z7008792	D-32-10	16.0	114	32	139	50	3.5

The load bearing width must be at least 0.5 x E.

4:1 Design Factor

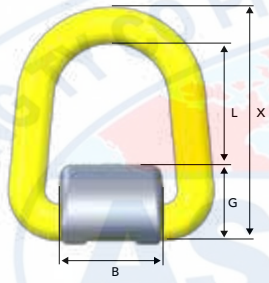

Weldable Lifting Point WLP

Stock No.	Code	WLL (t)	Dimensions (mm)				Weight (kg)
			B	G	L	X	
Z7009001	WLP-2.5T	2.5	50	27	53	95	0.5
Z7009011	WLP-4T	4.0	58	34	48	97	0.8
Z7009021	WLP-7T	7.0	64	41	73	135	1.8
Z7009031	WLP-10T	10.0	65	52	73	152	3.4
Z7009041	WLP-16T	16.0	90	66	105	203	6.7

4:1 Design Factor

Supplied with spring for stay up function.
Master Link measurements , see Master Link D above.

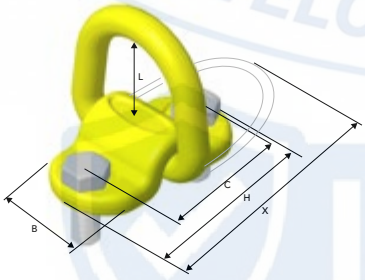

Screw-on Lifting Point SLP

Stock No.	Code	WLL (t)	Dimensions (mm)						Bolt Protrusion	Weight (kg)
			B	C	H	L	M	X		
Z7009881	SLP-1T	1.0	50	72	98	54	M14	139	25	0.8
Z7009871	SLP-3T	3.0	58	84	114	49	M16	144	28	1.3
Z7009861	SLP-5T	5.0	64	116	160	71	M20	203	34	2.6

4:1 Design Factor

Supplied with bolt and spring for stay up function.
Bolt according to: ISO 898-1 Class 10.9.
Master Link measurements, see Master Link D above.

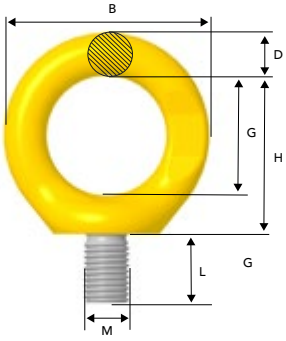

Eye Lifting Point ELP

Stock No.	Code	WLL (t)	Dimensions (mm)						Weight (kg)
			B	D	G	H	L	M	
Z100434	ELP-16-8	1.0**	72	16	42	55	24	M16	0.4
Z100435	ELP-20-8	1.5**	72	16	42	58	30	M20	0.4
Z100436	ELP-24-8	2.0**	88	19	48	69	36	M24	0.9
Z100437	ELP-30-8	3.0**	106	22	60	84	45	M30	1.4

4:1 Design Factor

** In case of 1-leg application where loading is limited to straight loading in the direction of thread (no bending force) it is possible to use ELP with four times higher WLL. Note! Threaded depths need to be at least 1xM for steel, 1.25xM for cast iron and 2xM for aluminum alloy.

Copyright © 2022 The Crosby Group LLC All Rights Reserved

GUNNEBO Industries

Spare Parts

Standard length bolt and long bolt for RLP and DLP are available as spare parts.

RDRLP - Metric

Standard length bolt including locking ring

Stock No.	Code
Z1017081	RDRLP-M8x1,25
Z1017101	RDRLP-M10x1,5
Z1017121	RDRLP-M12x1,75
Z1017161	RDRLP-M16x2
Z1017201	RDRLP-M20x2,5
Z1017241	RDRLP-M24x3
Z1017301	RDRLP-M30x3,5
Z1017361	RDRLP-M36x4
Z1017421	RDRLP-M42x4,5
Z1017481	RDRLP-M48x5

RDRLP - Metric

Long bolt including nut, locking ring and washer

Stock No.	Code
Z10170801L	RDRLP-M8x1.25 LB
Z10171001L	RDRLP-M10x1.5 LB
Z10171201L	RDRLP-M12x1.75 LB
Z10171601L	RDRLP-M16x2 LB
Z10172001L	RDRLP-M20x2.5 LB
Z10172401L	RDRLP-M24x3 LB
Z10173001L	RDRLP-M30x3.5 LB
Z10173601L	RDRLP-M36x4 LB
Z10174201L	RDRLP-M42x4.5 LB
Z10174801L	RDRLP-M48x5 LB

RDRLP - UNC

Standard length bolt including locking ring

Stock No.	Code
Z1018081	RDRLP-UNC 5/16"-18
Z1018101	RDRLP-UNC 3/8"-16
Z1018121	RDRLP-UNC 1/2"-13
Z1018161	RDRLP-UNC 5/8"-11
Z1018201	RDRLP-UNC 3/4"-10
Z1018211	RDRLP-UNC 7/8"-9
Z1018241	RDRLP-UNC 1"-8
Z1018301	RDRLP-UNC 1 1/4"-7
Z1018361	RDRLP-UNC 1 1/2"-6
Z1018421	RDRLP-UNC 1 3/4"-5
Z1018481	RDRLP-UNC 2"-4.5

RDRLP - UNC

Long bolt including nut, locking ring and washer

Stock No.	Code
Z10180801L	RDRLP-UNC 5/16"-18 LB
Z10181001L	RDRLP-UNC 3/8"-16 LB
Z10181201L	RDRLP-UNC 1/2"-13 LB
Z10181601L	RDRLP-UNC 5/8"-11 LB
Z10182001L	RDRLP-UNC 3/4"-10 LB
Z10182101L	RDRLP-UNC 7/8"-9 LB
Z10182401L	RDRLP-UNC 1"-8 LB
Z10183001L	RDRLP-UNC 1 1/4"-7 LB
Z10183601L	RDRLP-UNC 1 1/2"-6 LB
Z10184201L	RDRLP-UNC 1 3/4"-5 LB
Z10184801L	RDRLP-UNC 2"-4.5 LB

RDDLP - Metric

Standard length bolt including locking ring

Stock No.	Code
Z1022081	RDDLP-M8x1.25
Z1022101	RDDLP-M10x1.5
Z1022121	RDDLP-M12x1.75
Z1022161	RDDLP-M16x2
Z1022201	RDDLP-M20x2.5
Z1022241	RDDLP-M24x3
Z1022301	RDDLP-M30x3.5
Z1022361	RDDLP-M36x4
Z1022421	RDDLP-M42x4.5
Z1022481	RDDLP-M48x5

RDDLP - Metric

Long bolt including nut, locking ring and washer

Stock No.	Code
Z10220801L	RDDLP M8x1.25 LB
Z10221001L	RDDLP M10x1.5 LB
Z10221201L	RDDLP M12x1.75 LB
Z10221601L	RDDLP M16x2 LB
Z10222001L	RDDLP M20x2.5 LB
Z10222401L	RDDLP M24x3 LB
Z10223001L	RDDLP M30x3.5 LB
Z10223601L	RDDLP M36x4 LB
Z10224201L	RDDLP M42x4.5 LB
Z10224801L	RDDLP M48x5 LB

Copyright © 2022 The Crosby Group LLC All Rights Reserved

RDDLP - UNC

Standard length bolt including locking ring

Stock No.	Code
Z1023081	RDDLP UNC 5/16"-18
Z1023101	RDDLP UNC 3/8"-16
Z1023121	RDDLP UNC 1/2"-13
Z1023161	RDDLP -UNC 5/8"-11
Z1023201	RDDLP -UNC 3/4"-10
Z1023211	RDDLP -UNC 7/8"-9
Z1023241	RDDLP -UNC 1"-8
Z1023301	RDDLP -UNC 1 1/4"-7
Z1023361	RDDLP UNC 1 1/2"-6
Z1023421	RDDLP -UNC 1 3/4"-5
Z1023481	RDDLP -UNC 2"-4.5

RDDLP - UNC

Long bolt including nut, locking ring and washer

Stock No.	Code
Z10230801L	RDDLP UNC 5/16"-18 LB
Z10231001L	RDDLP UNC 3/8"-16 LB
Z10231201L	RDDLP UNC 1/2"-13 LB
Z10231601L	RDDLP UNC 5/8"-11 LB
Z10232001L	RDDLP UNC 3/4"-10 LB
Z10232101L	RDDLP UNC 7/8"-9 LB
Z10232401L	RDDLP UNC 1"-8 LB
Z10233001L	RDDLP UNC 1 1/4"-7 LB
Z10233601L	RDDLP UNC 1 1/2"-6 LB
Z10234201L	RDDLP UNC 1 3/4"-5 LB
Z10234801L	RDDLP UNC 2"-4.5 LB

ASEAN JSC.VN
ASEAN DEVELOPMENT JOINT STOCK COMPANY
ISO 9001:2015
Since 2006

Copyright © 2022 The Crosby Group LLC All Rights Reserved

COMPLETE WIND PROJECTS ON TIME & WITHIN BUDGET

Partner with the leading total rigging provider with the most comprehensive product portfolio, training opportunities & support

Keep your project on track through improved job site efficiency and safety with lifting and rigging hardware from The Crosby Group.

- Get the product you need, when you need it through a global network of 3,000+ authorized distributors with stock ready to ship.
- Ensure a well-trained workforce with access to extensive training curriculum and industry experience.
- Reduce time between lifts with quick-release shackle bolt securement and an adjustable, lightweight chain sling system.
- Prevent incidents through the use of top-quality hardware from a highly vertically integrated manufacturer.
- Create smarter lift plans with center of gravity calculations using wireless load cells.
- Obtain product authenticity certificates online at any time.

Crosby®

CÔNG TY CỔ PHẦN PHÁT TRIỂN KINH TẾ ĐÔNG NAM Á
ASEAN JSC VN
ASEAN DEVELOPMENT JOINT STOCK COMPANY
ISO 9001:2015
Since 2005

LIFTING CLAMPS & MAGNETS

Innovative lifting clamps for safer and more efficient lifts.

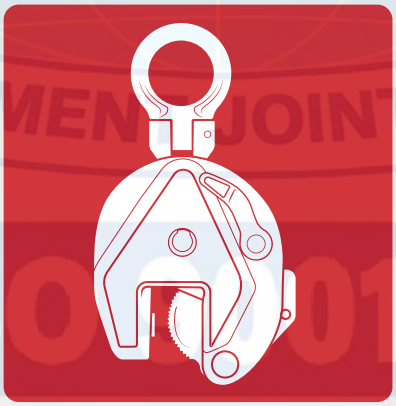

CÔNG TY CỔ PHẦN ĐẦU TƯ PHÁT TRIỂN KINH TẾ ĐÔNG NAM Á
ASEAN JSC.VN
ASEAN DEVELOPMENT JOINT STOCK COMPANY
ISO 9001:2015
Since 2006

the Crosby group
thecrosbygroup.com

Crosby IP

IPU10

Universal - for lifting in any direction

- Available in capacities of .5 thru 30 metric tons (higher Working Load Limits are available upon request).
- Wide variety of jaw openings available: 0 to 155mm.
- Welded alloy steel body for strength and smaller size. Forged alloy components, where required.
- Individually Proof Tested to 2 times the Working Load Limit with certification.
- Company name (Crosby IP), logo, Working Load Limit and jaw opening permanently stamped on body.
- Each product is individually serialized, with the serial number and Proof Load test date stamped on body. User manual with test certificate is included with each clamp.
- Available in a variety of styles:
  - IPU10 - Standard clamp for materials with a surface hardness to 363HV10 (345 HB).
  - IPU10J - Larger jaw opening.
  - IPU10S - For use with stainless steel material.
  - IPU10H - For use with materials with a surface hardness to 472HV10 (450 HB).
- Full 180° turning range for material transfer, turning or moving.
- Lock open, lock closed ability with latch for pretension on material and then release of material.
- For use with materials with a surface hardness to 279HV10. Only 5% minimum WLL is needed.
- Maintenance and repair kits are available.
- Minimum WLL is 5% of maximum WLL for .5t IPU10 only.
- Minimum WLL is 10% of maximum WLL for all other IPU10, IPU10J, IPU10S, IPU10H clamps.

IPU10S

Model IPU10 / IPU10J / IPU10S / IPU10H

Load Rated

Model	Working Load Limit (t)*	Stock No.	Weight Each (kg)	Dimensions (mm)									
				Jaw A	B	C	D	E	F	G	H	J	K
IPU10	0.5	2701675	1.9	0 - 16	44	130	216	40	115	42	28	-	11
IPU10	1	2701663	2.4	0 - 20	45	139	225	40	127	42	38	-	11
IPU10	2	2701677	8.5	0 - 35	78	201	368	70	188	64	55	-	16
IPU10	3	2701665	14.8	0 - 40	100	253	436	75	222	78	60	-	20
IPU10	4.5	2701667	16.0	0 - 40	100	253	436	75	227	82	65	-	20
IPU10	6	2701669	24.0	0 - 50	126	302	525	80	292	84	95	44	20
IPU10	9	2701671	29.5	0 - 50	126	325	552	80	310	94	104	44	20
IPU10	12	2701679	57.0	0 - 54	160	392	616	80	433	121	137	41	25
IPU10	16	2701683	79.0	5 - 64	180	463	736	88	492	121	153	45	25
IPU10	22.5	2701687	126.0	5 - 80	222	554	863	110	565	139	186	49	25
IPU10	30	2701691	141.0	5 - 80	222	554	868	110	580	153	186	54	30
With larger jaw opening													
IPU10J	0.5	2701647	1.9	15 - 30	45	128	209	40	128	42	32	-	11
IPU10J	1	2702463	2.5	20 - 40	55	151	221	40	141	42	41	-	11
IPU10J	3	2702465	17.3	40 - 80	115	270	432	75	277	78	67	-	20
IPU10J	4.5	2702467	18.9	40 - 80	115	270	432	75	281	82	72	-	20
IPU10J	6	2702469	26.5	50 - 100	126	302	515	80	336	84	95	44	20
IPU10J	9	2701673	30.5	50 - 100	126	325	550	80	360	94	105	44	20
IPU10J	12	2701681	65.0	54 - 108	178	438	662	80	491	121	136	41	25
IPU10J	16	2701685	85.0	64 - 128	208	521	784	88	562	121	160	45	25
IPU10J	22.5	2701689	149.0	80 - 155	255	628	938	110	660	139	196	49	25
IPU10J	30	2701693	165.0	80 - 155	255	628	942	110	660	153	196	54	30
For stainless steel - with universal hoisting eye													
IPU10S	0.5	2702275	1.9	0 - 16	44	130	216	40	115	42	28	-	11
IPU10S	1	2702263	2.4	0 - 20	45	139	225	40	127	42	38	-	11
IPU10S	2	2702277	8.5	0 - 35	78	201	368	70	188	64	55	-	16
IPU10S	3	2702265	14.8	0 - 40	100	253	436	75	222	78	60	-	20
IPU10S	4.5	2702267	16.0	0 - 40	100	253	436	75	227	82	65	-	20
IPU10S	6	2702269	24.0	0 - 50	126	302	525	80	292	84	95	44	20
IPU10S	9	2702271	29.5	0 - 50	126	325	552	80	310	94	104	44	20
IPU10S	12	2702279	57.0	0 - 54	160	392	616	80	433	121	137	41	25
For very hard materials - with universal hoisting eye													
IPU10H	0.5	2702175	1.9	0 - 16	44	130	216	40	115	42	28	-	11
IPU10H	0.75	2702163	2.4	0 - 20	45	139	225	40	127	42	38	-	11
IPU10H	1	2702177	7.6	0 - 35	78	201	368	70	188	64	55	-	16
IPU10H	2	2702165	14.8	0 - 40	100	253	436	75	222	78	60	-	20
IPU10H	3	2702167	16.0	0 - 40	100	253	436	75	227	82	65	-	20
IPU10H	4.5	2702169	24.0	0 - 50	126	302	525	80	292	84	95	44	20
IPU10H	6	2702171	29.5	0 - 50	126	325	552	70	310	94	104	44	20

Design Factor based on EN 13155 and ASME B30.20. Model IPU10R (remote control opening and closing via a cable) on request. Model IPU10W (wedge) available on request.

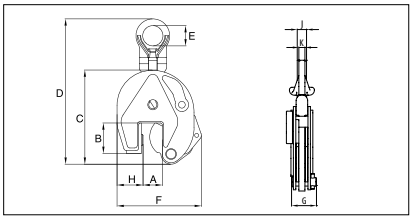

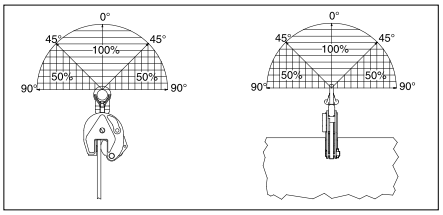

Copyright © 2023 The Crosby Group LLC All Rights Reserved

IP10

IP10H

For vertical lifting, turning and transfer

- Available in capacities of .5 through 30 metric tons (higher Working Load Limits are available upon request).
- Wide variety of jaw openings available: 0 to 155mm.
- Welded alloy steel body for strength and smaller size. Forged alloy components, where required.
- Individually Proof Tested to 2 times the Working Load Limit with certification.
- Company name (Crosby IP), logo, Working Load Limit and jaw opening permanently stamped on body.
- Each product is individually serialized, with the serial number and Proof Load test date stamped on body. User manual and test certificate included with each clamp.
- Available in a variety of styles:
  - IP10 - Standard clamp for materials with a surface hardness to 363HV10 (345 HB).
  - IP10J - Larger jaw opening.
  - IP10S - For use with stainless steel material.
  - IP10H - For use with materials with a surface hardness to 472HV10 (450 HB).
- Full 180° turning range for material transfer, turning or moving.
- Lock open, lock closed ability with latch for pretension on material and then release of material.
- For plate surface hardness till 279HV10, only 5% min. WLL is needed.
- Maintenance and repair kits are available.
- Minimum WLL is 5% of maximum WLL for .5t IP10 only.
- Minimum WLL is 10% of maximum WLL for all other IP10, IP10J, IP10S, IP10H clamps.

Model IP10 / IP10J / IP10S / IP10H

Lead Protect

Model	Working Load Limit (t)*	Stock No.	Weight Each (kg)	Dimensions (mm)									
				Jaw A	B	C	D	E	F	G	H	J	K
IP10	0.5	2701674	1.8	0 - 16	44	130	203	40	115	42	28	-	11
IP10	1	2701662	2.2	0 - 20	45	139	212	40	127	42	38	-	11
IP10	2	2701676	7.6	0 - 35	78	201	330	70	188	64	55	-	16
IP10	3	2701664	13.8	0 - 40	100	253	434	75	222	78	60	-	20
IP10	4.5	2701666	15.0	0 - 40	100	253	434	75	227	82	65	-	20
IP10	6	2701668	23.5	0 - 50	126	302	517	80	292	84	95	40	20
IP10	9	2701670	27.5	0 - 50	126	325	445	80	310	94	104	44	25
IP10	12	2701678	49.0	0 - 54	160	392	574	80	433	121	137	41	25
IP10	16	2701682	68.0	5 - 64	180	463	686	88	492	121	153	49	25
IP10	22.5	2701686	108	5 - 80	222	554	803	110	565	153	186	54	30
IP10	30	2701690	124	5 - 80	222	554	803	110	565	153	186	54	30
With larger jaw opening													
IP10J	0.5	2701646	1.8	15 - 30	45	128	209	40	128	42	32	-	11
IP10J	1	2702462	2.5	20 - 40	55	151	207	40	141	42	41	-	11
IP10J	3	2702458	16.4	40 - 80	115	271	432	75	276	78	67	-	20
IP10J	4.5	2702460	18.0	40 - 80	115	271	432	75	281	82	72	-	20
IP10J	6	2701705	24.5	50 - 100	126	302	506	80	336	84	95	40	20
IP10J	9	2701672	28.5	50 - 100	126	325	542	80	360	94	105	44	25
IP10J	12	2701680	58.0	54 - 108	178	438	620	80	491	121	136	41	25
IP10J	16	2701684	80.0	64 - 128	208	521	734	88	562	121	160	45	25
IP10J	22.5	2701688	131.0	80 - 155	255	628	883	110	660	139	196	49	25
IP10J	30	2701692	147.0	80 - 155	255	628	887	110	660	153	196	54	30
For stainless steel - with fixed hoisting eye													
IP10S	0.5	2702274	1.8	0 - 20	44	130	203	40	115	42	28	11	11
IP10S	1	2702262	2.2	0 - 35	45	139	212	40	127	42	38	11	11
IP10S	2	2702276	7.6	0 - 40	78	201	330	70	188	64	55	16	16
IP10S	3	2702264	13.8	0 - 40	100	253	434	75	222	78	60	20	20
IP10S	4.5	2702266	15.0	0 - 50	100	253	434	75	227	82	65	20	20
IP10S	6	2702268	23.5	0 - 50	126	302	517	80	292	84	95	20	20
IP10S	9	2702270	27.5	0 - 54	126	325	544	80	310	94	104	25	25
IP10S	12	2702278	49.0	0-16	160	392	574	80	433	121	137	25	25
For very hard materials - with fixed hoisting eye													
IP10H	0.5	2702174	1.8	0-16	44	130	207	40	115	42	28	11	11
IP10H	0.75	2702162	2.2	0-20	45	139	219	40	130	42	38	11	11
IP10H	1	2702176	7.6	0-35	78	201	330	70	188	64	55	16	16
IP10H	2	2702164	13.8	0-40	100	253	434	75	222	78	60	20	20
IP10H	3	2702166	15.0	0-40	100	253	434	75	227	82	65	20	20
IP10H	4.5	2702168	23.5	0-50	126	302	517	80	292	84	95	20	20
IP10H	6	2702170	27.5	0-50	126	325	544	80	310	92	105	25	25

Design Factor based on EN 13155 and ASME B30.20. Model IP10 available in 40t, 55t and 100t on request.Model IP10R (remote control opening and closing via a cable) available on request.

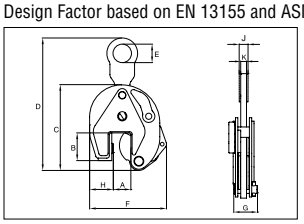

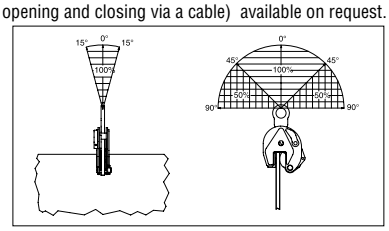

Copyright © 2023 The Crosby Group LLC All Rights Reserved

Crosby IP

IPNM10N

For use in almost all sectors of industry where, during the lift or transfer, no damage to the material is permitted.

- Available in capacities of .5 , 1 and 2 metric tons (higher Working Load Limits are available upon request).
- Wide variety of jaw openings available: 0 to 40mm.
- Welded alloy steel body for strength and smaller size. Forged alloy components, where required.
- Individually Proof Tested to 2 times the Working Load Limit with certification.
- Company name (Crosby IP), logo, Working Load Limit and jaw opening permanently stamped on body.
- Each product is individually serialized, with the serial number and Proof Load test date stamped on body. User manual with test certificate is included with each clamp.
- Full 180° turning range for material transfer, turning or moving.
- Lock open, lock closed ability with latch for pretension on material and then release of material.
- Material must be clean and dry.
- There is no minimum WLL required.
- Maintenance and repair kits are available.
- Temperature range -20° C to 70° C
- Optional with brake pad lining for temperature range -40° C to +200° C
- Special jaw openings or curved jaws upon request.

IPNM10P

Load Proofed

Model IPNM10

Model	Working Load Limit (t)*	Stock No.	Weight Each (kg)	Dimensions (mm)								
				Jaw A	B	C	D	E	F	G	H	K
IPNM10N	0.5	2703811	2.7	0 - 10	84	159	235	40	128	60	42	11
IPNM10N	1	2703738	4.4	0 - 20	97	209	278	40	184	80	56	11
IPNM10	2	2703442	14.5	0 - 40	153	258	396	70	296	100	161	16
With protection cap												
IPNM10P	0.5	2703278	2.8	0 - 10	82	157	221	40	145	68	48	11
IPNM10P	1	2703279	4.5	0 - 20	97	195	276	40	205	82	66	11
With larger jaw opening												
IPNM10NJ	1	2703814	4.7	20 - 37	97	220	321	40	200	80	56	11
IPNM10NJ1	1	2703819	5.5	0 - 25	97	238	351	40	213	80	63	11

* Design Factor based on EN 13155 and ASME B30.20.

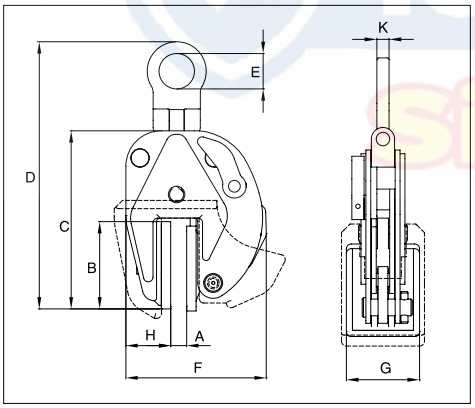

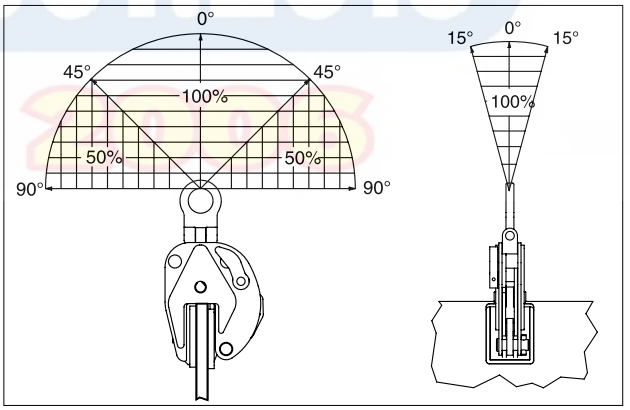

Copyright © 2023 The Crosby Group LLC All Rights Reserved

IPU10A

For vertical transport of plates

- Available in capacities of 1, 2 and 6 metric tons (higher Working Load Limits are available upon request).
- Jaw openings available: 0 to 50mm.
- Welded alloy steel body for strength and smaller size. Forged alloy components where required.
- Individually Proof Tested to 2 times the Working Load Limit with certification.
- Company name (Crosby IP), logo, Working Load Limit and jaw opening permanently stamped on body.
- Each product is individually serialized, with the serial number and Proof Load test date stamped on body. User manual with test certificate is included with each clamp.
- Full 180° turning range for material transfer, turning or moving.
- Lock open, lock closed ability with latch for pretension on material and then release of material.
- Minimum WLL of 10% of Maximum WLL.
- Maintenance and repair kits are available.
- For use with materials with a plate surface hardness to 279HV10, only 5% of minimum WLL is needed.

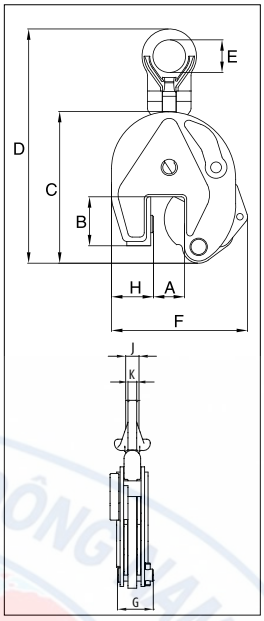

Model IPU10A

Model	Working Load Limit (t)*	Stock No.	Weight Each (kg)	Dimensions (mm)									
				Jaw A	B	C	D	E	F	G	H	J	K
IPU10A	1	2701628	2.3	0 - 20	45	139	225	40	127	42	38	-	11
IPU10A	2	2701629	8.4	0 - 35	78	201	368	70	188	64	55	-	16
IPU10A	6	2701638	25.4	0 - 50	126	302	525	80	292	84	95	44	20

* Design Factor based on EN 13155 and ASME B30.20.

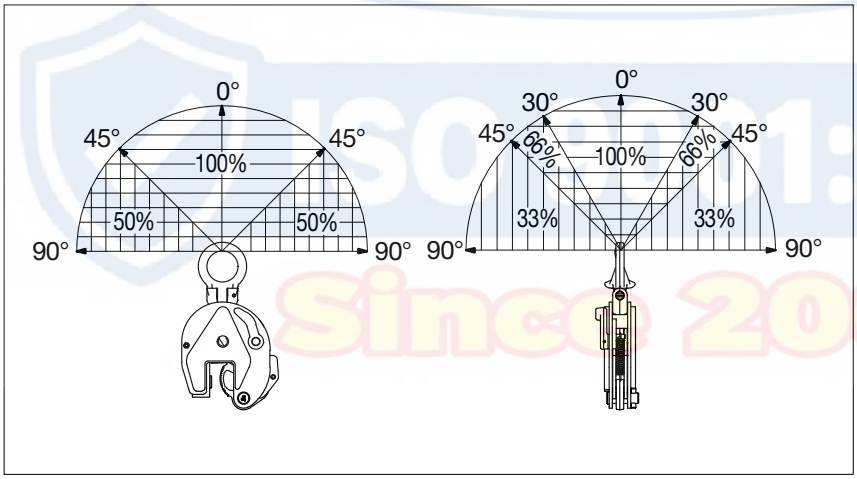

Copyright © 2023 The Crosby Group LLC All Rights Reserved

Crosby IP

IPHNM10

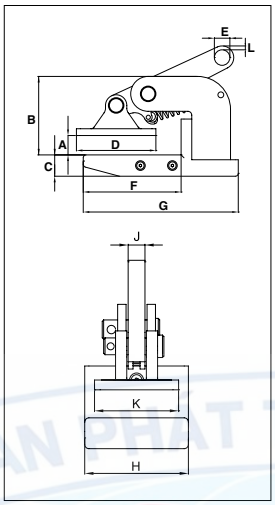

IPH10

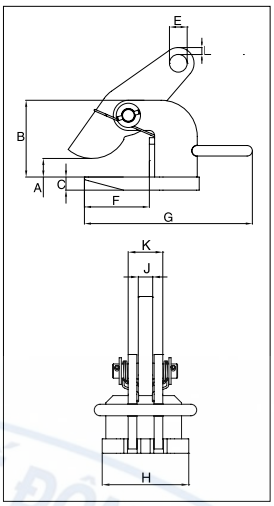

For Horizontal Lift and Transfer with Pretension System

- Available in capacities of .5 through 12 metric tons (higher Working Load Limits are available upon request).
- Jaw openings available: 0 to 120mm.
- Welded alloy steel body for strength and smaller size. Forged alloy components, where required.
- Individually Proof Tested to 2 times the Working Load Limit with certification.
- Company name (Crosby IP), logo, Working Load Limit and jaw opening permanently stamped on body.
- Each product is individually serialized, with the serial number and Proof Load test date stamped on body. User manual with test certificate is included with each clamp.
- Maintenance and repair kits are available.

Load Proofed

Model IPHNM10

Model	Working Load Limit (Per Pair) (t)*	Stock No.	Weight Each (kg)	Dimensions (mm)										
				Jaw A	B	C	D	E	F	G	H	J	K	L
IPHNM10	0.5	2703287	2.0	0 - 20	81	22	82	16	101	160	74	12	60	4
IPHNM10	1	2703288	3.5	0 - 35	93	30	92	16	103	164	74	12	60	7
IPHNM10	2	2703290	7.5	0 - 30	139	30	131	22	166	245	100	20	74	9
IPHNM10J	2	2703291	8.0	30 - 60	169	30	131	22	166	245	100	20	74	9

* Design Factor based on EN 13155 and ASME B30.20.

Model IPH10 / IPH10J: With Spring Loaded Tension, Magnets and Handle

Model	Working Load Limit (Per Pair) (t)*	Stock No.	Weight Each (kg)	Dimensions (mm)									
				Jaw A	B	C	E	F	G	H	J	K	L
IPH10	0.5+	2703297	1.8	0 - 20	86	12	16	103	150	60	12	27	4
IPH10	1+	2703298	2.5	0 - 35	100	16	16	103	150	60	12	31	7
IPH10	2	2703522	5.5	0 - 60	117	16	22	109	256	110	20	40	9
IPH10	3	2703523	7.5	0 - 60	117	20	26	109	266	120	20	48	11
IPH10	4.5	2703524	10.5	0 - 60	132	25	30	104	280	130	20	48	12
IPH10	6	2703525	13.0	0 - 60	143	25	36	123	320	130	20	48	14
IPH10	9	2703526	18.5	0 - 60	157	30	43	133	330	140	25	62	16
IPH10	12	2703527	21.5	0 - 60	172	30	47	141	353	150	25	62	17
With larger jaw opening #													
IPH10J	3	2703533	9.0	60 - 120	177	20	26	109	266	120	20	48	9
IPH10J	4.5	2703534	12.0	60 - 120	192	25	30	104	280	130	20	48	11
IPH10J	6	2703535	15.0	60 - 120	203	25	36	123	320	130	20	48	12
IPH10J	9	2703536	20.5	60 - 120	217	30	43	133	330	140	25	62	14
IPH10J	12	2703537	24.0	60 - 120	232	30	47	141	353	150	25	62	16

* Design Factor based on EN 13155 and ASME B30.20.+ No handle or magnets. # Larger Working Load Limits available.

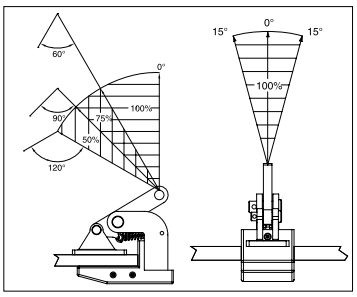

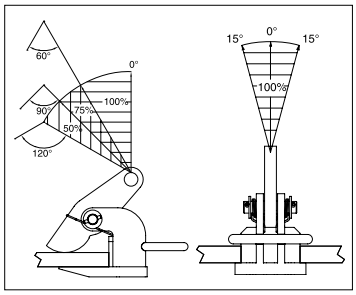

Copyright © 2023 The Crosby Group LLC All Rights Reserved

IPH10E

For horizontal lifting and transfer

- Available in capacities of 2.0 thru 25 metric tons.
- Wide variety of jaw openings available: 0 to 120mm.
- Welded alloy steel body for strength and smaller size. Forged alloy, components where required.
- Equipped with handle for easy placement.
- Individually Proof Tested to 2 times the Working Load Limit with certification.
- Company name (CrosbyIP), logo, Working Load Limit and jaw opening permanently stamped on body.
- Each product is individually serialized, with the serial number and Proof Load test date stamped on body. User manual with test certificate is included with each clamp.
- Maintenance and repair spare kits are available.

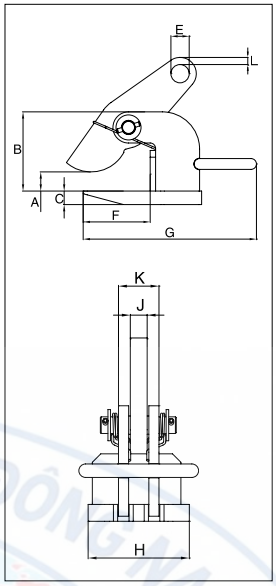

Load Tested

Model IPH10E

Model	Working Load Limit (Per Pair) (t)*	Stock No.	Weight Each (kg)	Dimensions (mm)									
				Jaw A	B	C	E	F	G	H	J	K	L
IPH10E	2	2703542	5.5	0 - 60	117	16	22	109	256	110	20	40	9
IPH10E	3	2703543	7.5	0 - 60	117	20	26	109	266	120	20	48	11
IPH10E	4.5	2703544	10.5	0 - 60	132	25	30	104	280	130	20	48	12
IPH10E	6	2703545	13	0 - 60	143	25	36	123	320	130	20	48	14
IPH10E	9	2703546	18.5	0 - 60	157	30	43	133	330	140	25	62	16
IPH10E	12	2703547	21.5	0 - 60	172	30	47	141	353	150	25	62	17

*Design Factor based on EN 13155 and ASME B30.20.

Model IPH10JE

Model	Working Load Limit (Per Pair) (t)*	Stock No.	Weight Each (kg)	Dimensions (mm)									
				Jaw A	B	C	E	F	G	H	J	K	L
IPH10JE	3	2703553	9.0	60 - 120	177	20	26	109	266	120	20	48	11
IPH10JE	4.5	2703554	12.0	60 - 120	192	25	30	104	280	130	20	48	12
IPH10JE	6	2703555	15.0	60 - 120	203	25	36	123	320	130	20	48	14
IPH10JE	9	2703556	20.5	60 - 120	217	30	43	133	330	140	25	62	16
IPH10JE	12	2703557	24.0	60 - 120	232	30	47	141	353	150	25	62	17

* Design Factor based on EN 13155 and ASME B30.20.

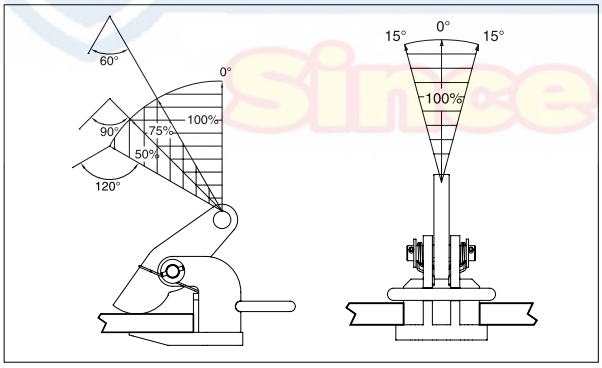

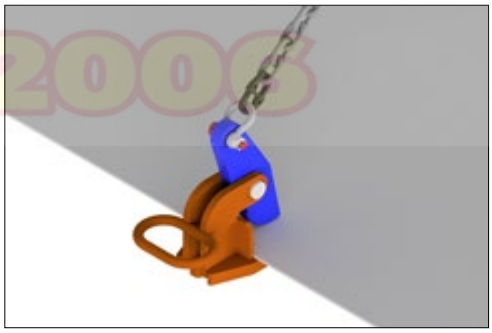

Copyright © 2023 The Crosby Group LLC All Rights Reserved

Crosby IP

IPHOZ

For Horizontal Lifting and Transfer

- Available in capacities of .75 through 15 metric tons (higher Working Load Limits are available upon request).
- Wide variety of jaw openings available: 0 to 60mm.
- Welded alloy steel body for strength and smaller size. Forged alloy, components where required.
- Equipped with handle for easy placement.
- Individually Proof Tested to 2 times the Working Load Limit with certification.
- Company name (Crosby IP), logo, Working Load Limit and jaw opening permanently stamped on body.
- Each product is individually serialized, with the serial number and Proof Load test date stamped on body. User manual with test certificate is included with each clamp.
- Maintenance and repair kits are available.

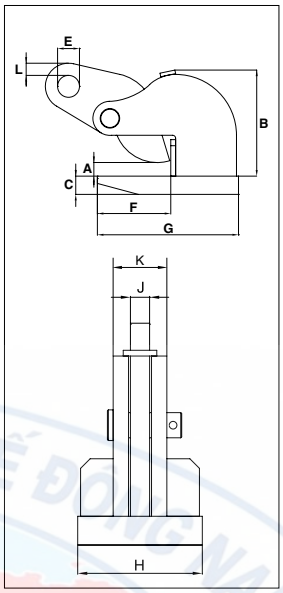

Load Rated

Model IPHOZ

Model	Working Load Limit (Per Pair) (t)*	Stock No.	Weight Each (kg)	Dimensions (mm)									
				Jaw A	B	C	E	F	G	H	J	K	L
IPHOZ	0.75	2705401	3.0	0 - 30	94	16	16	70	118	81	12	31	12
IPHOZ	1.5	2705402	5.5	0 - 45	133	16	22	125	192	100	16	36	12
IPHOZ	3	2705403	8.0	0 - 45	137	20	26	125	200	120	20	48	10
IPHOZ	4.5	2705404	9.5	0 - 45	138	25	30	126	220	120	20	50	10
IPHOZ	6	2705405	15.5	0 - 60	171	30	36	135	235	130	20	56	20
IPHOZ	9	2705406	25.0	0 - 60	211	30	43	166	276	160	25	62	20
IPHOZ	12	2705407	29.0	0 - 60	217	40	47	168	294	190	25	62	19
IPHOZ	15	2705408	36.5	0 - 60	220	40	47	183	317	250	25	62	22

*Design Factor based on EN 13155 and ASME B30.20.

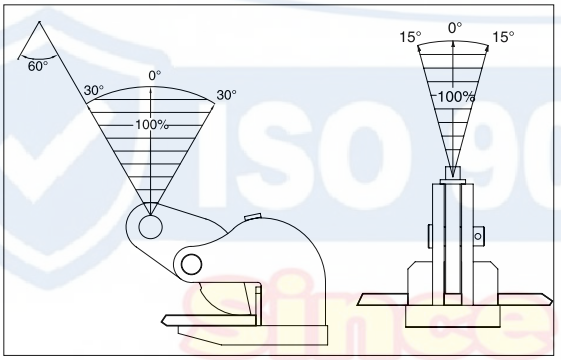

Copyright © 2023 The Crosby Group LLC All Rights Reserved

IPPE10B(E)

IPPE10BNM

For lifting and transporting non-bendable sheet metal in a horizontal position.

- Available in capacities of 3 through 12 metric tons (higher Working Load Limits are available upon request).
- Wide variety of jaw openings available: 0 to 180mm
- Welded alloy steel body for strength and smaller size. Forged alloy components, where required.
- Individually Proof Tested to 2 times the Working Load Limit with certification.
- Company name (Crosby IP), logo, Working Load Limit and jaw opening permanently stamped on body.
- Each product is individually serialized, with the serial number and Proof Load test date stamped on body. User manual with test certificate is included with each clamp.
- Maintenance and repair kits are available.
- IPPE10B: Magnets in foot plate (also applies for D and H Type).
- IPPE10BE: Economic version (also applies for D and H-Type).
- IPPE10BNM: Non-marring (also applies for D and H-Type).

Load Tested

Model IPPE10B / IPPE10BE / IPPE10BNM

Model	Working Load Limit (Per Pair) (t)*	Stock No.	Weight Each (kg)	Dimensions (mm)									
				Jaw A	B	C	D	E	F	G	H	J	L
IPPE10B	3	2703862	11.5	0-180	204	322	20	26	66	20	100	50	15
IPPE10B	6	2703871	16.3	0-180	220	340	25	30	74	20	140	60	13
IPPE10B	9	2703888	24.8	0-180	248	365	25	34	90	20	190	70	13
IPPE10B	12	2703921	32.7	0-180	252	376	30	40	90	25	200	70	18
IPPE10BE	3	2703863	11.5	0-180	204	322	20	26	66	20	100	50	15
IPPE10BE	6	2703870	16.3	0-180	220	340	25	30	74	20	140	60	13
IPPE10BE	9	2703891	24.8	0-180	248	365	25	34	90	20	190	70	13
IPPE10BE	12	2703924	32.7	0-180	262	376	30	40	90	25	200	70	18
IPPE10BNM	3	2703864	12.4	0-180	204	322	30	26	68	20	100	50	15
IPPE10BNM	6	2703872	17.3	0-180	220	340	35	30	76	20	140	60	13
IPPE10BNM	9	2703894	27.7	0-180	248	365	35	34	92	20	190	70	13
IPPE10BNM	12	2703927	35.2	0-180	262	376	40	40	92	25	200	70	15

* Design Factor based on EN 13155 and ASME B30.20. Also available in D-Type (maximum jaw opening of 300mm) and H-Type (maximum jaw opening of 420mm).

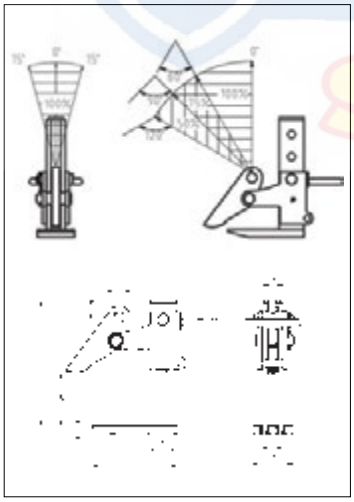

IPPE10(E)

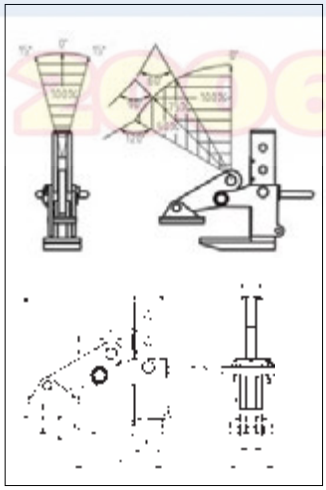

IPPE10NM

Copyright © 2023 The Crosby Group LLC All Rights Reserved

Crosby IP

IPBC

For Horizontal Transfer - with Pretension System

- Available in capacities of 1 through 4.5 metric tons (Higher Working Load Limits are available upon request).
- Jaw openings available: 0 to 40mm.
- Welded alloy steel body for strength and smaller size. Forged alloy, components where required.
- Equipped with handle for easy placement.
- Individually Proof Tested to 2 times the Working Load Limit with certification.
- Company name (CrosbyIP), logo, Working Load Limit and jaw opening permanently stamped on body.
- Each product is individually serialized, with the serial number and Proof Load test date stamped on body. User manual with test certificate is included with each clamp.
- Maintenance and repair kits are available.

IPHGUZ

Load Tested

Model IPBC

Model	Working Load Limit (t)*	Stock No.	Weight Each (kg)	Dimensions (mm)									
				Jaw A	B	C	E	F	G	H	J	K	L
IPBC	1	2700410	3.5	0 - 20	132	52	26	75	185	36	16	182	12
IPBC	2	2700411	6.5	0 - 25	152	62	30	82	210	49	20	218	15
IPBC	3	2700412	8.5	0 - 25	157	66	30	82	210	57	20	225	15

* Design Factor based on EN 13155 and ASME B30.20.

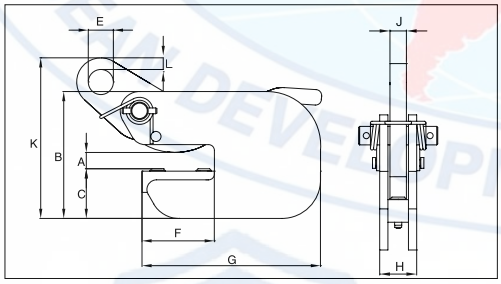

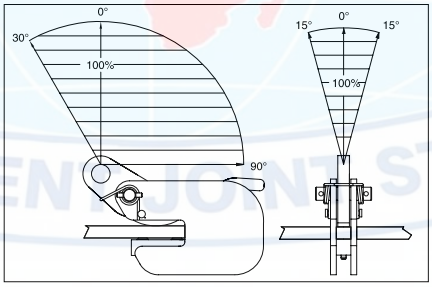

Model IPHGUZ: Universal Lifting Eye / Model IPHGZ: Fixed Hoisting Eye

Model	Working Load Limit (t)*	Stock No.	Weight Each (kg)	Dimensions (mm)								
				Jaw A	B	C	D	E	F	G	J	K
IPHGUZ	1.5	2705455	9.0	0 - 25	110	232	287	70	139	90	20	16
IPHGUZ	3	2705456	19.9	0 - 40	119	253	348	75	175	120	25	20
IPHGUZ	4.5	2705457	30.0	0 - 40	119	301	370	80	175	155	30	44
Fixed Hoisting Eye												
IPHGZ	0.75	2705451	4.0	0 - 25	82	148	206	50	99	98	12	22
IPHGZ	1.5	2705452	7.3	0 - 25	110	200	250	50	118	90	20	28
IPHGZ	3	2705453	12.3	0 - 40	120	227	305	70	148	120	25	32
IPHGZ	4.5	2705454	25.0	0 - 40	120	284	381	70	181	155	30	40

* Design Factor based on EN 13155 and ASME B30.20.

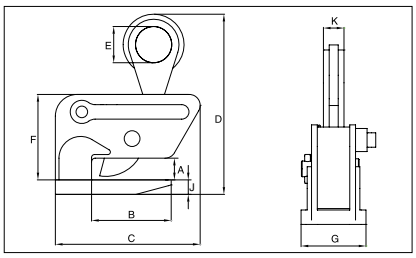

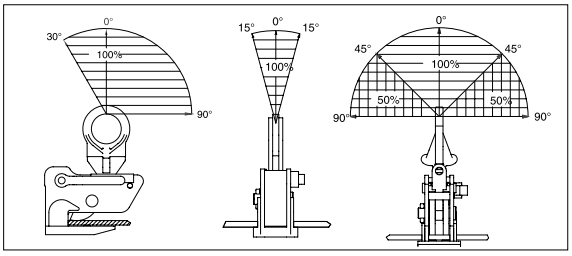

Copyright © 2023 The Crosby Group LLC All Rights Reserved

IPPH

- Crosby IP Pipe Hooks provide a fast and efficient method for lifting pipe, tube or any similarly shaped fabrications.
- Alloy steel plate construction.
- Equipped with a convenient handle.
- Equipped with a Bolt Type Shackle.
- Optional non marring inserts available.
- Used in pairs with 45° - 60° horizontal angle or 60° - 90° included angle.

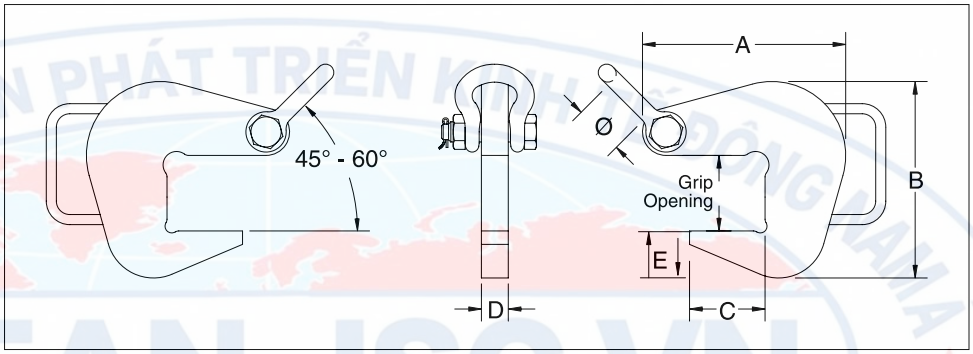

Pipe Hook

Model	Working Load Limit Per Pair (t)**	Stock No.	Weight Each (kg)	Grip Opening (mm)	Dimensions (mm) A	B	C	D	E	Ø	Shackle Size (mm)	Nylon (PA6) Inserts*
IPPH	2	2734500	2.70	52.3	148	129	52.3	25.4	31.8	42.9	5/8	2734900 2734909
IPPH	4	2734509	4.56	71.4	192	186	71.4	25.4	44.4	42.9	5/8	2734918
IPPH	6	2734518	8.05	103	259	256	103	25.4	57.2	50.8	3/4	2734927
IPPH	10	2734527	17.5	154	376	383	154	25.4	88.9	68.3	1.0	2734936

**Design factor based on EN13155 and ASME B30.20.

NOTE: To determine grip opening when equipped with an insert, add the insert thickness shown in the Pipe Hook Insert table below.

- Replaceable nylon (PA6) inserts for use with the IPPHI Pipe Hook that minimizes thread and pipe damage.

IPPHI

Pipe Hook Inserts

Model	Stock No.	ID of Pipe (mm)	Grip Opening (mm)
IPPHI	2734900	76 - 305	41
	2734909	305 - 457	44
	2734918	457 - 762	63
	2734927	762 - 1067	95
	2734936	1067 - 1329	145

Copyright © 2023 The Crosby Group LLC All Rights Reserved

MAGNEX™

- Solid steel construction with recessed area, reducing risk of damage to tags for identification and technical user information.
- Fully welded construction, minimizing maintenance costs.
- Innovative and patented easy switch stop block, equipped with ball bearing and ergonomic handle for increased safety and ease of use.
- Individually proof tested to 3 times the working load limit with certification.
- Each product is individually serialized, with the serial number and proof load test date stamped on body.
- User manual with test certificate included with each magnet
- 5-year warranty on magnetic system.
- CE certified including test certificate in accordance with EN 13155.
- Maintenance replacement kits are available.
- Can be used on both flat and round steel surfaces.

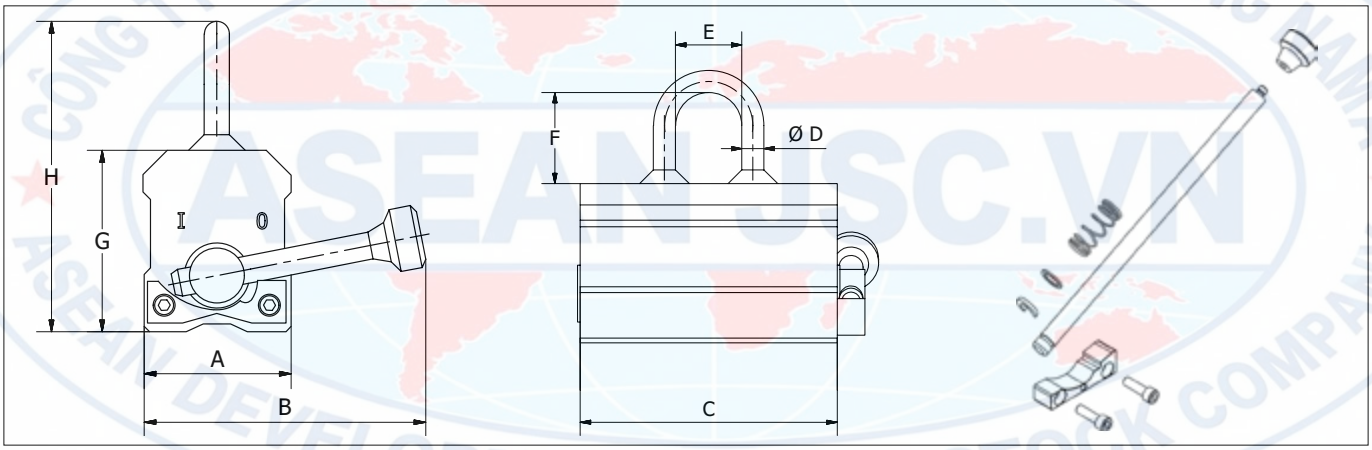

Crosby MAGNEX™ Lifting Magnet

Model	WLL (kg)*	Stock No.	Weight each (kg)	Dimensions (mm)							
				A	B	C	D	E	F	G	H
MAGNEX150	150	2708023	3.1	60	115	102	10	30	40	69	119
MAGNEX300	300	2708024	10.9	100	210	152	14	50	65	99	178
MAGNEX600	600	2708025	21.7	120	245	246	20	64	65	99	184
MAGNEX1000	1000	2708026	40.9	146	329	306	20	64	92	125	237
MAGNEX1500	1500	2708027	71.7	165	392	374	20	64	92	161	273
MAGNEX2000	2000	2708028	91.4	165	475	478	20	64	92	161	273

Model	Flat Material			Round Material		
	WLL (kg)*	min. thickness for max. WLL (mm)*	min. load thickness (mm)	WLL (kg)*	min. Ø (mm)	max. Ø (mm)
MAGNEX150	150	25	2	75	50	100
MAGNEX300	300	30	4	150	60	200
MAGNEX600	600	40	6	300	65	270
MAGNEX1000	1000	60	10	500	100	300
MAGNEX1500	1500	80	15	750	150	350
MAGNEX2000	2000	80	15	1000	150	350

*WLL based on low carbon, mild steel and a working temperature 20° C.

Copyright © 2023 The Crosby Group LLC All Rights Reserved

IPBK10

For the transfer and stacking of steel beams

- IPVUZ / IPVZ: Available in capacities of 0.75 through 1.5 metric tons.
- IPVUZ / IPVZ: Jaw openings available: 0 to 20mm
- IPBK10: Available in capacities of 0.5 through 4 metric tons.
- IPBK10: Jaw openings available: 5 to 28mm
- Welded alloy steel body for strength and smaller size. Forged alloy components, where required.
- Individually Proof Tested to 2 times the Working Load Limit with certification.
- Company name (Crosby IP), logo, Working Load Limit and jaw opening permanently stamped on body.
- Each product is individually serialized, with the serial number and Proof Load test date stamped on body. User manual with test certificate is included with each clamp.
- Minimum WLL of 10% of Maximum WLL.
- Maintenance and repair kits are available.
- For use with materials with a plate surface hardness to 279HV10, only 5% min WLL is needed.

IPVZ

Model IPBK10

Model	Working Load Limit (t)*	Stock No.	Weight Each (kg)	Dimensions (mm)								
				Jaw A	B	C	D	E	F	G	H	J
IPBK10	0.5	2703931	2.4	5-15	43	134	216	45	120	48	45	10
IPBK10	1	2703837	2.6	5-15	43	152	230	45	123	47	45	10
IPBK10	2	2703838	7.3	5-25	62	223	341	70	198	61	70	16
IPBK10	4	2703839	16.9	5-28	75	282	431	100	232	78	72	20

Design Factor based on EN 13155 and ASME B30.20.

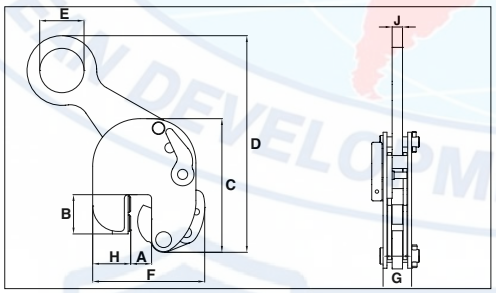

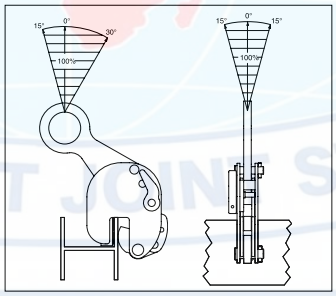

Model IPVUZ: Universal Hoisting Eye / Model IPVZ: Fixed Hoisting Eye

Model	Working Load Limit (t)*	Stock No.	Weight Each (kg)	Dimensions (mm)								
				Jaw A	B	C	D	E	F	G	H	K
IPVUZ	0.75	2705146	2.3	0 - 15	26	130	216	40	115	42	30	11
IPVUZ	1.5	2705147	6.9	0 - 20	55	200	378	70	200	61	64	16
Fixed Hoisting Eye												
IPVZ	0.75	2705096	2.1	0 - 15	26	130	203	40	115	42	30	11
IPVZ	1.5	2705097	5.9	0 - 20	55	200	339	70	180	61	64	16

* Design Factor based on EN 13155 and ASME B30.20.

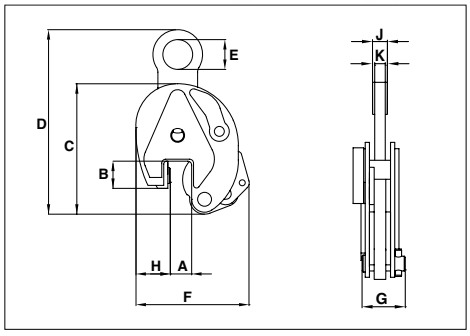

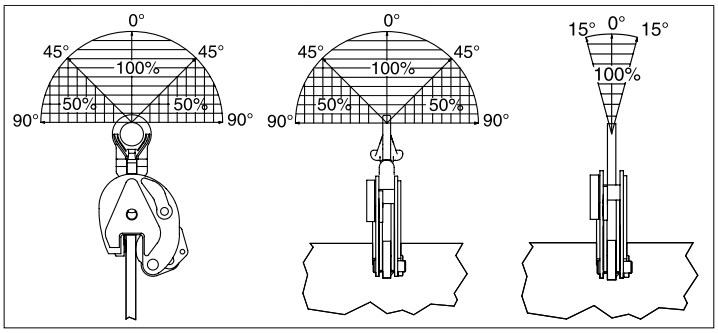

Copyright © 2023 The Crosby Group LLC All Rights Reserved

Crosby IP

IPBHZ

For the lifting and transfer of steel beams

- IPBHZ: Available in capacities of .75 through 12 metric tons (higher Working Load Limits are available upon request).
- IPBHZ: Wide variety of jaw openings available: 0 to 40mm.
- IPBSNZ: Available in capacities of 1.5 through 4.5 metric tons (higher Working Load Limits are available upon request).
- IPBSNZ: Wide variety of jaw openings available: 0 to 50mm.
- Welded alloy steel body for strength and smaller size. Forged alloy components, where required.
- Individually Proof Tested to 2 times the Working Load Limit with certification.
- Company name (Crosby IP), logo, Working Load Limit and jaw opening permanently stamped on body.
- Each product is individually serialized, with the serial number and Proof Load test date stamped on body. User manual with test certificate is included with each clamp.
- Minimum WLL of 10% of Maximum WLL.
- Maintenance and repair kits are available.

IPBSNZ

Model IPBHZ

Load Tested

Model	Working Load Limit (t)*	Stock No.	Weight Each (kg)	Dimensions (mm)								
				Jaw A	B	C	D	E	F	G	J	L
IPBHZ	0.75	2705461	3.0	0 - 25	40	148	220	50	130	69	33	22
IPBHZ	1.5	2705462	6.0	0 - 25	60	203	255	50	158	73	35	28
IPBHZ	3	2705463	10.5	0 - 40	80	227	325	70	188	112	38	32
IPBHZ	4.5	2705464	25.0	0 - 40	112	284	413	70	251	116	80	40
IPBHZ	12	2705467	42.3	0 - 40	125	466	490	90	317	90	90	47

* Design Factor based on EN 13155 and ASME B30.20.

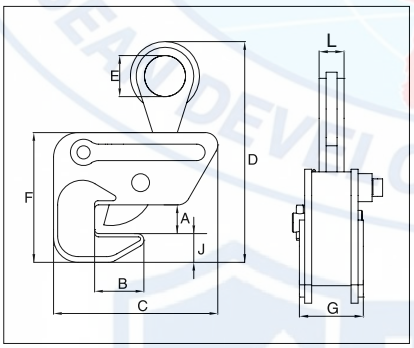

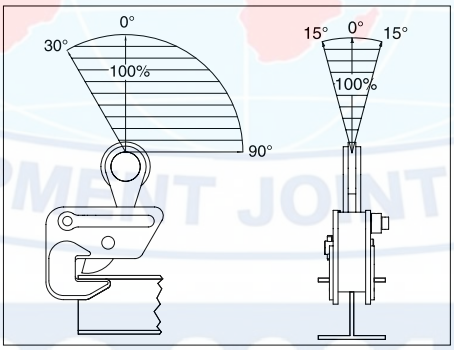

Model IPBSNZ

Model	Working Load Limit (t)*	Stock No.	Weight Each (kg)	Dimensions (mm)										
				Jaw A	B	C	D	E	F	G	H	J	K	L
IPBSNZ	1.5	2705925	14.0	0 - 32	100 - 270	304	480	70	319	47	16	165	148	240
IPBSNZ	3	2705926	22.0	0 - 40	100 - 330	352	494	75	408	56	20	207	182	260
IPBSNZ	4.5	2705927	30.5	0 - 50	100 - 360	420	630	75	457	56	20	250	188	293

* Design Factor based on EN 13155 and ASME B30.20.

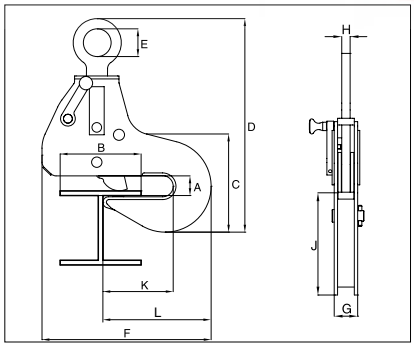

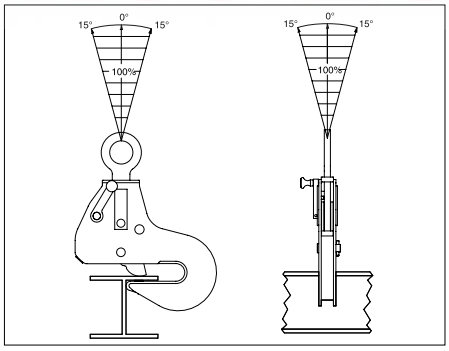

Copyright © 2023 The Crosby Group LLC All Rights Reserved

IPTK

For transferring steel beams and attaching tackle eye

- Available in capacities of 2 through 25 metric tons (higher Working Load Limits are available upon request).
- Wide variety of jaw openings available: 75 to 1020mm.
- Welded alloy steel body for strength and smaller size. Forged alloy components, where required.
- Individually Proof Tested to 2 times the Working Load Limit with certification.
- Company name (Crosby IP), logo, Working Load Limit and jaw opening permanently stamped on body.
- Each product is individually serialized, with the serial number and Proof Load test date stamped on body. User manual with test certificate is included with each clamp.
- Maintenance and repair kits are available.

IPTKU

IPTKW

IPTKUM

IPTK: with hoisting eye / **IPTKW**: without hoisting eye
IPTKU: with hinged hoisting eye / **IPTKUD**: with double locking device
IPTKUM: Suitable as anchor device for personnel fall arrest equipment

Load Proofed

Model	Working Load Limit (t)*	Stock No.	Weight Each (kg)	Dimensions (mm)							
				Jaw A	C	D	E	F	H	J	K
IPTK	2	2700996	6.0	75 - 190	A + 80	125	75	-	25	-	20
IPTK	3	2700997	6.5	75 - 190	A + 80	125	75	-	25	-	20
IPTK	4	2700998	8.5	150 - 280	A + 100	125	75	-	35	-	20
IPTK	5	2700994	11.0	120 - 350	A + 195	125	75	-	40	-	20
IPTK	25	2702999	225	450 - 1020	A + 220	500	125	-	76	-	45
Without Hoisting Eye											
IPTKW	2	2700966	4.0	75 - 190	A + 80	125	-	28	25	-	-
IPTKW	3	2700967	4.5	75 - 190	A + 80	125	-	28	25	-	-
IPTKW	4	2700968	6.3	150 - 280	A + 100	125	-	33	35	-	-
IPTKW	5	2700969	8.8	120 - 350	A + 195	125	-	33	40	-	-
With Improved Hinged Hoisting Eye											
IPTKU	2	2707996	5.7	75 - 190	A + 100	121	76		22	99	19
IPTKU	3	2707997	6.4	75 - 190	A + 100	121	89		22	122	22
IPTKU	4	2707998	12.1	120 - 280	A + 150	140	89		40	122	22
IPTKU	5	2707994	14.5	120 - 350	A + 175	140	89		40	122	22
IPTKU	10	2707970	41.0	200 - 460	A + 300	200	105		60	152	26
Suitable as anchor device for personnel fall arrest equipment - standard according to EN 795											
IPTKUM	1 person	2709991	6	75 - 190	A + 100	165	76	-	22	99	19
With Optional Double Locking Device											
IPTKUD	2	2709996	6.0	75 - 190	A + 100	165	76	-	22	99	19
IPTKUD	3	2709993	6.6	75 - 190	A + 100	165	89	-	22	122	22
IPTKUD	4	2709995	12.3	120 - 280	A + 150	185	89	-	40	122	22
IPTKUD	5	2709994	15.3	120 - 350	A + 175	185	89	-	40	122	22
IPTKUD	10	2709970	43.0	200 - 460	A + 300	215	105	-	60	152	26

* Design Factor based on EN 13155 and ASME B30.20.

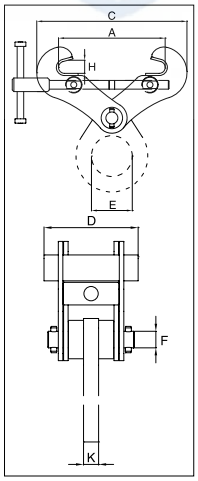

IPTK/IPTKW

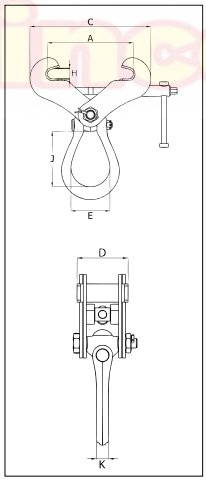

IPTKU(D)(M)

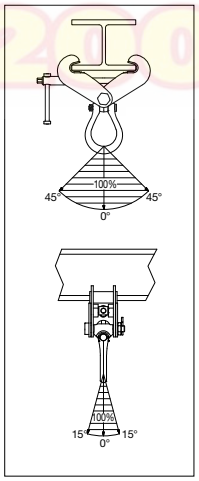

IPTKU(D)

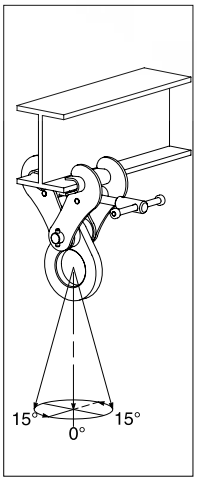

IPTK(W)

Copyright © 2023 The Crosby Group LLC All Rights Reserved

Crosby iP

IPTKA

- Maintains full WLL at angles up to 90°.
- Bail swivels 360° and pivots 180°.
- Easy to close and open with a hinged body with self-locking device.
- Easy to handle with handgrips.
- No interference or space limitations when tightening the clamp.
- Multi-purpose hoisting eye to be used for tightening as well as for hoisting.
- Light weight design.
- All parts are replaceable.
- Maintenance and repair kits are available.
- Can be used for a wide range of profile sizes.

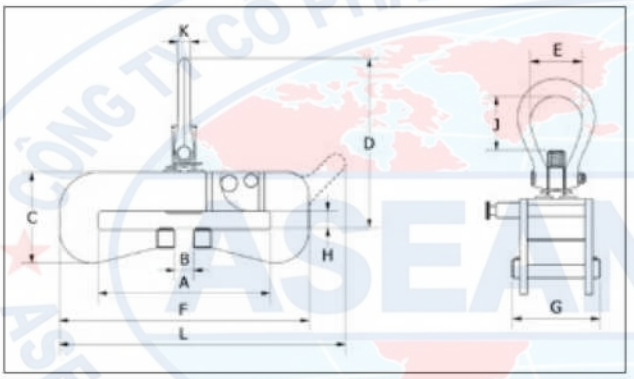

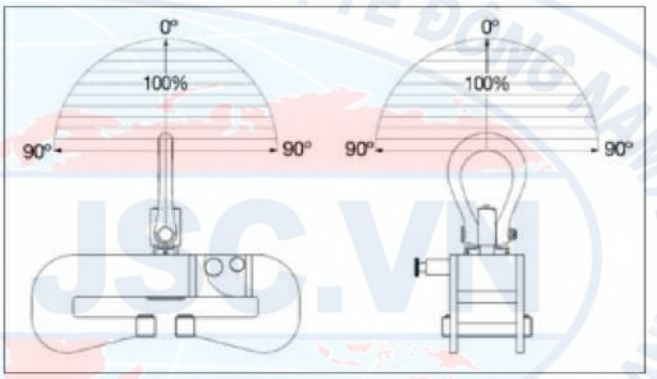

IPTKA Universal Beam Clamp

Lead Rated

Model	WLL (t)	Stock No.	Weight (kg)	Dimensions (mm)										
				A	B	C	D	E	F	G	H	J	K	L
IPTKA	3	2707111	15.9	100 - 205	34	149	307	89	310	130	6 - 26	94	22	369
IPTKAJ1	3	2707116	14.2	70 - 125	24	134	297	89	257	130	6 - 26	94	22	315
IPTKAJ2	3	2707117	16.0	100 - 205	54	164	322	89	310	130	20 - 40	94	22	369
IPTKA	5	2707065	23.3	100 - 305	34	164	306	89	450	150	6 - 26	94	22	-
IPTKAJ1	5	2707114	16.9	70 - 125	24	139	296	89	297	150	6 - 26	94	22	336
IPTKAJ2	5	2707115	23.2	100 - 305	74	179	321	89	450	150	20 - 40	94	22	-
IPTKA	10	2707118	62	140 - 405	74	234	450	121	600	220	12 - 42	152	30	-
IPTKA	15	2707124	71	140 - 405	74	244	450	121	630	220	12 - 42	152	30	-

Copyright © 2023 The Crosby Group LLC All Rights Reserved

IPBCF / IPBCNS

For the lifting and transfer of wide flange beam sections and plate girders

- When lifting, these beam clamps grip the beam at three points, and when properly balanced and safely guided, the beam can be handled even if the clamp is slightly off center lengthwise.
- Capacities: 4.5 through 32 metric tons. (higher Working Load Limits are available upon request).
- Eliminates the need for slings, chokers, and spreader bars.
- When applied to load, the tongs automatically open and slide under the flange of the beam.
- Center plate and gripping tongs work together - the heavier the beam, the greater the clamping pressure.
- Model IPBCNS clamps have a recessed base to accept studs welded to the beam surface.
- Welded alloy steel body for strength and smaller size. Forged alloy components, where required.
- Individually Proof Tested to 2 times the Working Load Limit with certification.
- Company name (Crosby IP), logo, Working Load Limit and jaw opening permanently stamped on body.
- Each product is individually serialized, with the serial number and Proof Load test date stamped on body. User manual with test certificate is included with each clamp.
- Maintenance and repair kits are available.

Beam Clamps

Model No.	WLL (t)*	Stock No.	Weight Each (kg)	Flange Grip Range (mm) Width (A)	Flange Grip Range (mm) Thickness (B)	Dimensions (mm) C	D	E	F	G	K
IPBCF	4.5	2702000	29.4	102 - 254	13 - 25	348	536 - 452	95	338 - 475	602 - 531	21
IPBCNS	13.5	2702018	62.0	178 - 432	13 - 51	444	775 - 592	140	505 - 749	894 - 719	34
IPBCNS	22.5	2702036	132	406 - 610	25 - 76	596	1012 - 812	152	775 - 969	1140 - 982	44
IPBCNS	32	2702054	240	406 - 914	41 - 102	730	1189 - 1023	178	792 - 1348	1458 - 1258	51

Design factor based on EN 13155 and ASME B30.20.

NOTE: Control the beam at all times. Beams should be gripped as near the center as possible. Snubbing lines at each end must be used to control excessive twisting or swinging, and to guide the beam to its proper place. Each lifting situation may have a specific demand which should be addressed before lifting.

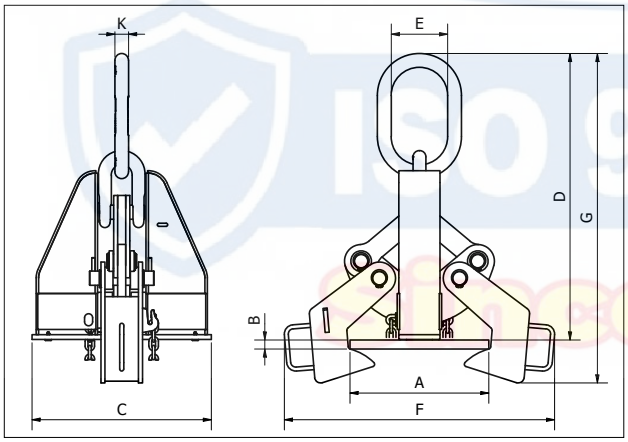

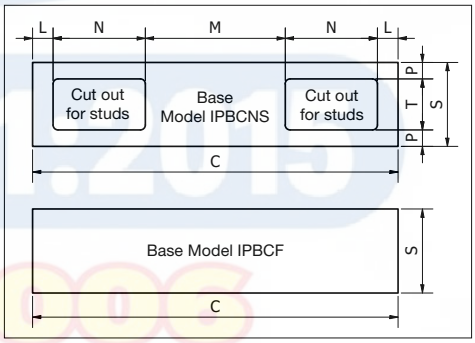

Base Stock No.	Base Dimensions (mm) C	L	M	N	P	S	T
IPBCF	348	-	-	-	-	76	-
IPBCNS	444	25	170	112	20	102	62
IPBCNS	596	33	190	170	30	152	92
IPBCNS	730	49	226	203	30	152	92

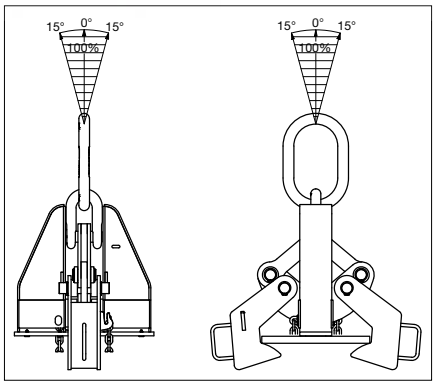

Copyright © 2023 The Crosby Group LLC All Rights Reserved

Crosby IP

IPSTARTEC11

For Lifting, Transferring and Controlled Tilting of Steel Beams

- Available in capacities of 1.5 and 2.5 metric tons (higher Working Load Limits are available upon request).
- Jaw openings available: 6 to 20mm.
- Welded alloy steel body for strength and smaller size. Forged alloy, components where required.
- Equipped with handle for easy placement.
- Individually Proof Tested to 2 times the Working Load Limit with certification.
- Company name (Crosby IP), logo, Working Load Limit and jaw opening permanently stamped on body.
- Each product is individually serialized, with the serial number and Proof Load test date stamped on body. User manual with test certificate is included with each clamp.
- Maintenance replacement parts are available.

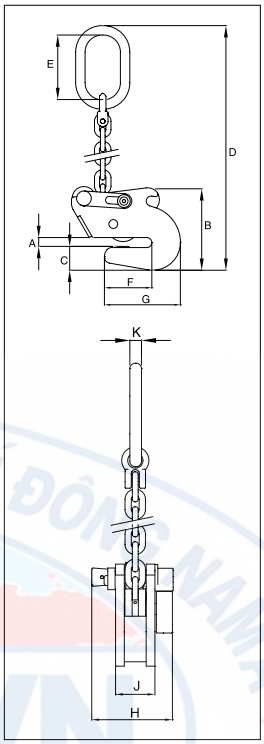

Load Rated

Model IPSTARTEC11

Model	Working Load Limit (t)*	Stock No.	Weight Each (kg)	Dimensions (mm)									
				Jaw A	B	C	D	E	F	G	H	J	K
IPSTARTEC11	1.5	2701812	6.6	6 - 12	140	39	575	110	81	129	126	54	16
IPSTARTEC11	2.5	2701822	14.5	6 - 20	210	55	725	135	115	182	140	74	18

* Design Factor based on EN 13155 and ASME B30.20.

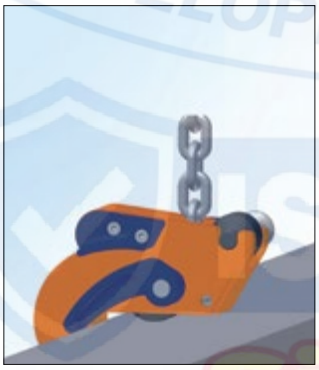

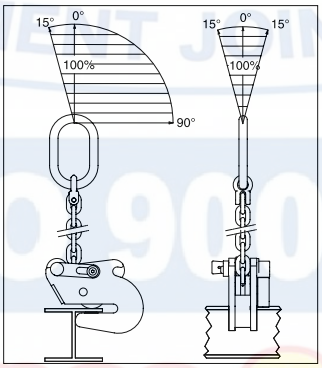

Copyright © 2023 The Crosby Group LLC All Rights Reserved

IPSC10

Suitable for use in positioning & turning steel plates and sections. Not to be used as a lifting clamp.

- Available in capacities of 1.5 and 3 metric tons (higher Working Load Limits are available upon request).
- Jaw openings available: 0 to 60mm.
- Suitable for steel with a surface hardness up to 300 HV10.
- Forged alloy steel body for strength and smaller size. Forged alloy components, where required.
- Individually Proof Tested to 2 times the Working Load Limit with certification.
- Company name (Crosby IP), logo, Working Load Limit and jaw opening permanently stamped on body.
- Each product is individually serialized, with the serial number and Proof Load test date stamped on body. User manual with test certificate is included with each clamp.
- Maintenance and repair kits are available.

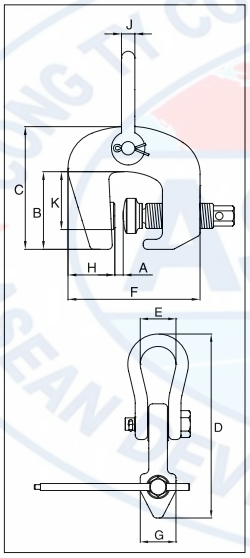

Model IPSC10

Model	Working Load Limit (t)*	Stock No.	Weight Each (kg)	Dimensions (mm) Jaw A	B	C	D	E	F	G	H	J	K
IPSC10	1.5	2703857	4.6	0 - 40	91	143	251	44	156	50	45	16	65
IPSC10	3	2703858	8.4	0 - 60	109	175	310	51	200	62	55	19	83

* Design Factor based on EN 13155 and ASME B30.20.

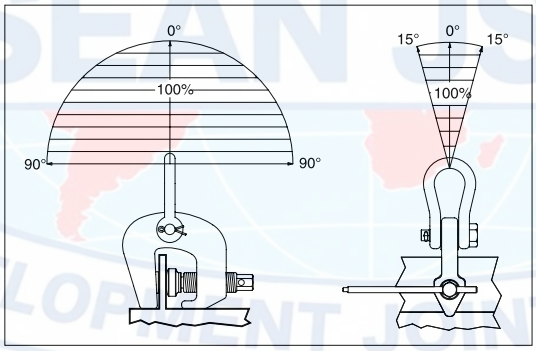

Copyright © 2023 The Crosby Group LLC All Rights Reserved

Crosby IP

IPBTO10

For use as a temporary tackle eye in spaces that have been reinforced with HP (bulb) profiles such as engine rooms and shipsections.

- Available in capacities of 1.5 through 6 metric tons (higher Working Load Limits are available upon request).
- Wide variety of jaw openings available: HP 160mm to HP 430mm
- Alloy steel body for strength and smaller size. Forged alloy components, where required.
- Individually Proof Tested to 2 times the Working Load Limit with certification.
- Company name (Crosby IP), logo, Working Load Limit and jaw opening permanently stamped on body.
- Each product is individually serialized, with the serial number and Proof Load test date stamped on body. User manual with test certificate is included with each clamp.
- Maintenance and repair kits are available.

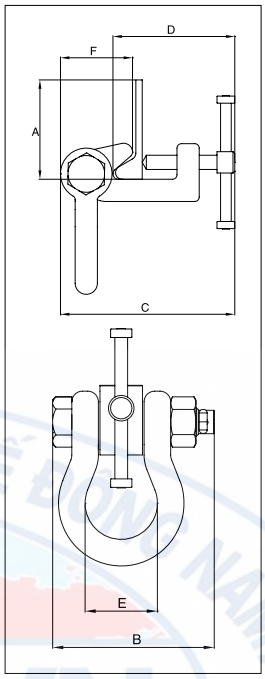

Model IPBTO10

Load Proofed

Model	Working Load Limit (t)*	Stock No.	Weight Each (kg)	Dimensions (mm)					
				Profile A †	B	C	D	E	F
IPBTO10	1.5	2700980	4.3	HP 160-240	137	188-209	129-150	68	81
IPBTO10	3	2700986	6.0	HP 240-320	137	188-217	145-174	68	78
IPBTO10	6	2700991	13.0	HP 300-430	185	255-297	195-236	82	102

* Design Factor based on EN 13155 and ASME B30.20. **† Profile A is the type of Holland Bulb (HP) style and size material.**

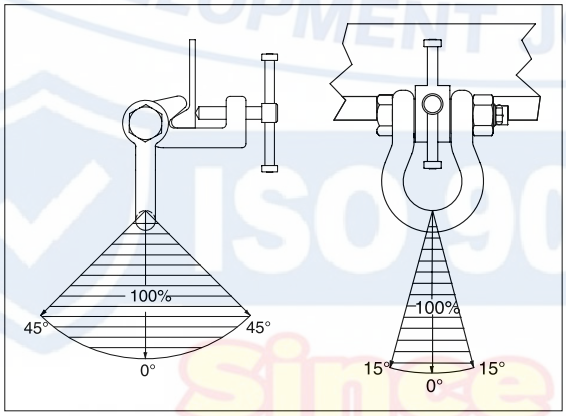

Copyright © 2023 The Crosby Group LLC All Rights Reserved

IPBUZ

For Lifting, Transferring and Placing Bulb Profiles onto Ship's Hulls Perpendicularly

- Available in capacities of .75 through 3.75 metric tons (higher Working Load Limits are available upon request).
- Jaw openings available: HP 120mm to HP 430mm.
- Welded alloy steel body for strength and smaller size. Forged alloy components, where required.
- Individually Proof Tested to 2 times the Working Load Limit with certification.
- Company name (Crosby IP), logo, Working Load Limit and jaw opening permanently stamped on body.
- Each product is individually serialized, with the serial number and Proof Load test date stamped on body. User manual with test certificate is included with each clamp.
- Maintenance and repair kits are available.

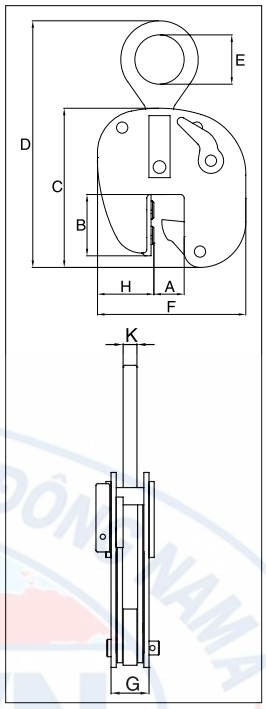

Model IPBUUZ: with Universal Hoisting Eye
Model IPBUZ: with Fixed Hoisting Eye

Load Proof

Model	Working Load Limit (t)*	Stock No.	Weight Each (kg)	Dimensions (mm)								
				Profile A †	B	C	D	E	F	G	H	K
IPBUUZ	0.75	2705601	8.5	HP 120-200	85	226	390	70	210	61	70	16
With fixed hoisting eye												
IPBUZ	0.75	2705600	7.0	HP 120-200	85	226	390	70	210	61	70	16
IPBUZ	1.5	2705701	15.0	HP 220-430	196	397	568	70	256	69	48	16
IPBUZ	3.75	2705702	29.2	HP 220-430	238	438	565	80	355	64	100	20

* Design Factor based on EN 13155 and ASME B30.20. **† Profile A is the type of Holland Bulb (HP) style and size material.**

IPBUZ

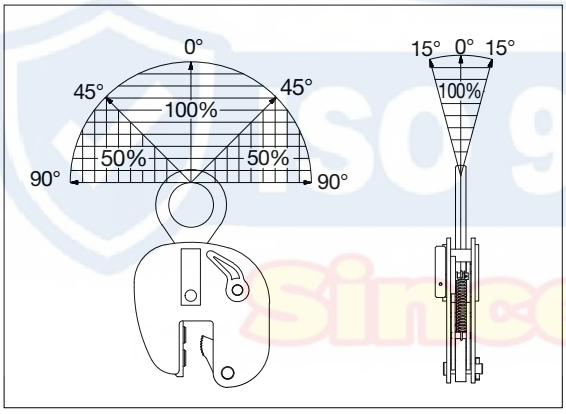

IPBUUZ

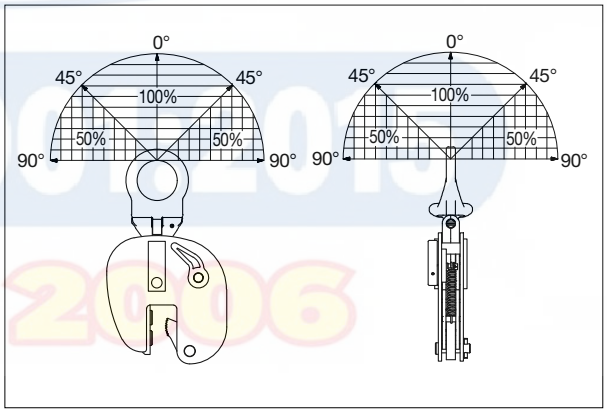

Copyright © 2023 The Crosby Group LLC All Rights Reserved

Crosby IP

IPSBUUZ

For Lifting, Transferring and Placing Complete Shipsections

- Available in capacities of 4.5 through 22.50 metric tons (higher Working Load Limits are available upon request).
- Wide variety of jaw openings available: HP 100mm to HP 430mm.
- Welded alloy steel body for strength and smaller size. Forged alloy components, where required.
- Individually Proof Tested to 2 times the Working Load Limit with certification.
- Company name (Crosby IP), logo, Working Load Limit and jaw opening permanently stamped on body.
- Each product is individually serialized, with the serial number and Proof Load test date stamped on body. User manual with test certificate is included with each clamp.
- Maintenance and repair kits are available.

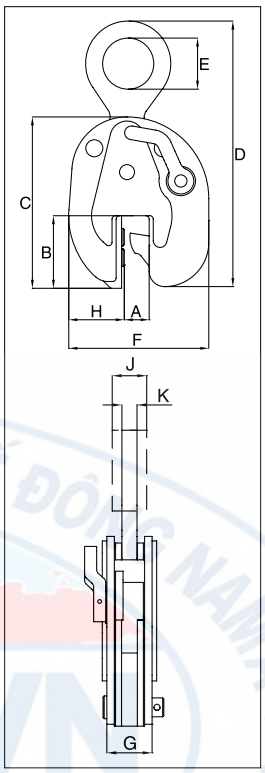

Model IPSBUUZ / IPSBUSUZ: With Universal Hoisting Eye
Model IPSBUZ / IPSBUSZ: With Fixed Hoisting Eye

Load Rated

Model	Working Load Limit (t)*	Stock No.	Weight Each (kg)	Dimensions (mm)									
				Profile A†	B	C	D	E	F	G	H	J	K
IPSBUUZ	4.5	2705771	15.5	HP 100-160	107	252	450	75	206	96	82	36	20
IPSBUUZ	9	2705773	43.0	HP 100-160	105	274	491	80	248	123	104	44	20
IPSBUSUZ	4.5	2705772	38.0	HP 180-430	227	428	635	75	377	95	128	-	20
IPSBUSUZ	9	2705774	69.0	HP 180-430	227	478	718	80	425	118	155	44	25

Design Factor based on EN 13155 and ASME B30.20. **† Profile A is the type of Holland Bulb (HP) style and size material.**

IPSBUZ

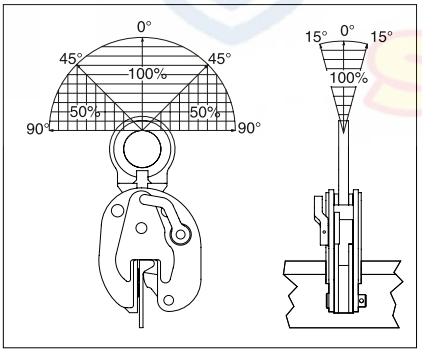

IPSBUUZ

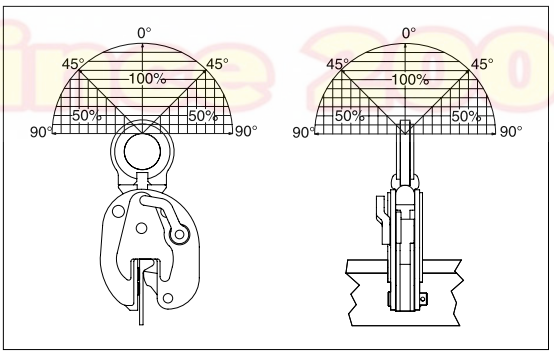

Copyright © 2023 The Crosby Group LLC All Rights Reserved

IPDV

Designed to lift, move and transfer 50-55 gallon drums with steel tops

- Available in capacity of .5 metric tons (higher Working Load Limits are available upon request).
- Jaw openings available: IPDV - 300mm and IPVK - 17mm.
- Welded alloy steel body for strength and smaller size. Forged alloy components, where required.
- Individually Proof Tested to 2 times the Working Load Limit with certification.
- Company name (Crosby IP), logo, Working Load Limit and jaw opening permanently stamped on body.
- Each product is individually serialized, with the serial number and Proof Load test date stamped on body. User manual with test certificate is included with each clamp.
- Maintenance and repair kits are available.

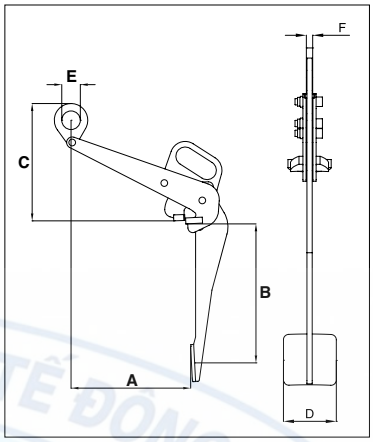

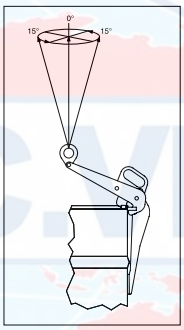

Model IPDV

Load Proofed

Model	Working Load Limit (t)*	Stock No.	Weight Each (kg)	Dimensions (mm)					
				Jaw A	B	C	D	E	F
IPDV	0.5	2700118	7.1	300	375	290	100	50	12

*Design Factor based on EN 13155 and ASME B30.20.

IPVK

Model IPVK

Model	Working Load Limit (t)*	Stock No.	Weight Each (kg)	Dimensions (mm)						
				Jaw A	B	C	D	E	G	K
IPVK	0.5	2700116	1.6	0 - 17	26	135	132	29	51	11

* Design Factor based on EN 13155 and ASME B30.20.

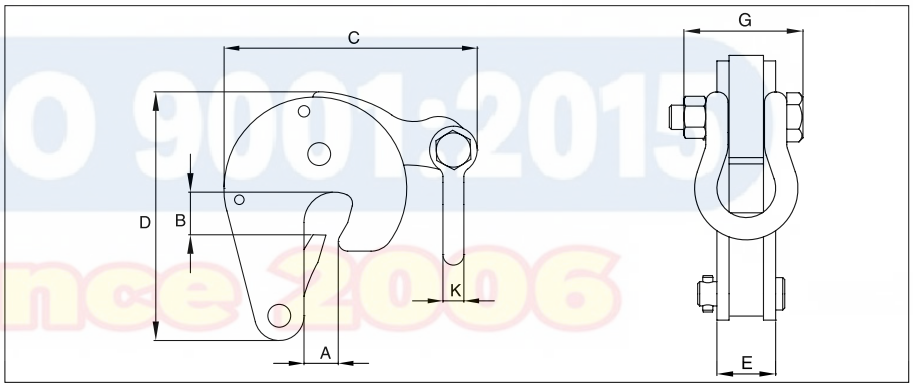

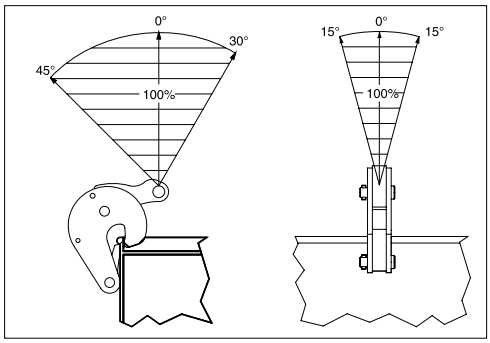

Copyright © 2023 The Crosby Group LLC All Rights Reserved

Crosby IP

IPCC

For Lifting and Transferring Concrete Pipe Sections and Wells

- Available in capacity of 1 metric tons (higher Working Load Limits are available upon request).
- Jaw opening available: 40 - 140mm.
- Welded alloy steel body for strength and smaller size. Forged alloy, components where required.
- Equipped with handle for easy placement.
- Individually Proof Tested to 2 times the Working Load Limit with certification.
- Company name (Crosby IP), logo, Working Load Limit and jaw opening permanently stamped on body.
- Each product is individually serialized, with the serial number and Proof Load test date stamped on body. User manual with test certificate is included with each clamp.
- Maintenance replacement parts are available.

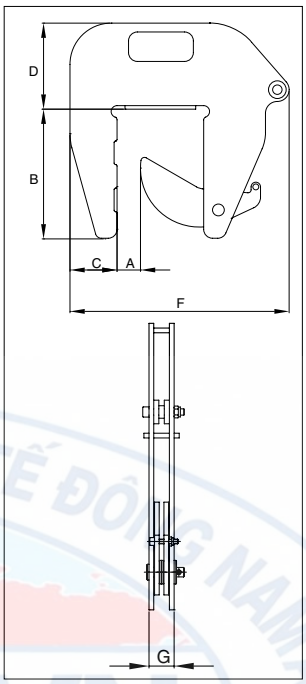

Load Proofed

Model IPCC

Model	Working Load Limit Per Pair (t)*	Stock No.	Weight Each (kg)	Dimensions (mm)					
				Jaw A	B	C	D	F	G
IPCC	1	2700037	9.2	40-140	225	80	146	372	37

* Design Factor based on EN 13155 and ASME B30.20.

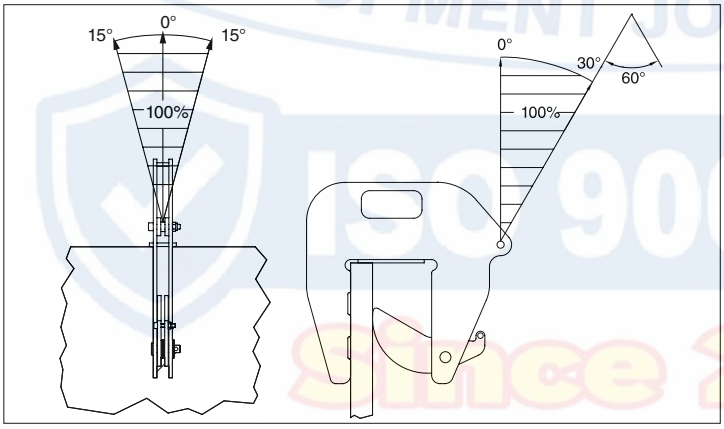

CÔNG TY CỔ PHẦN PHÁT TRIỂN KINH TẾ ĐÔNG NAM Á
ASEAN JSC.VN
ASEAN DEVELOPMENT JOINT STOCK COMPANY
ISO 9001:2015
Since 2006

Copyright © 2023 The Crosby Group LLC All Rights Reserved

IPBG

The CrosbyIP Barrier Grab provides a fast and efficient method for handling road barriers.

- Hands-free operation.
- Welded alloy steel construction for strength and smaller size.
- Comes equipped with polyurethane pads. (Replacement kits are available.)
- Individually Proof Tested to 2 times the Working Load Limit with certification.
- Company name (Crosby IP), logo, Working Load Limit and jaw opening permanently stamped on body.
- Each product is individually serialized, with the serial number and Proof Load test date stamped on body. User manual with test certificate is included with each clamp.

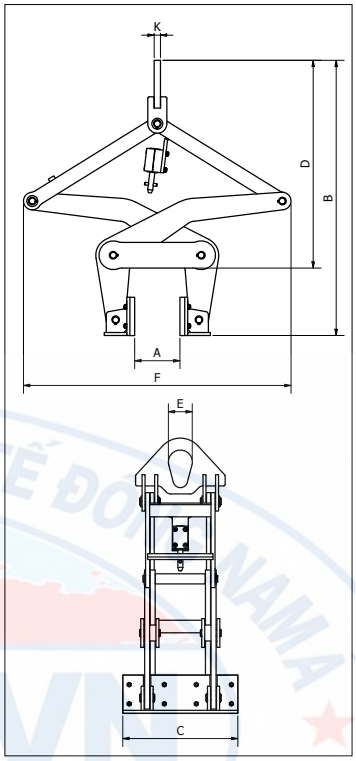

Load Tested

Barrier Grab

Model	WLL (t)*	Stock No.	Weight Each (kg)	Dimensions (mm)						
				Jaw A	B	C	D	E	F	K
IPBG	4	2704018	156	152 (min.)	1149	457	882	95	1038	25
				305 (max.)	861	457	598	95	1128	25

* Design factor based on EN13155 and ASME B30.20.

Copyright © 2023 The Crosby Group LLC All Rights Reserved

The IPU10 vertical lifting clamp is used for lifting, turning, moving or vertical transfer of sheet, plates, or fabrications from horizontal to vertical and down to horizontal (180°) as needed. The hinged hoisting eye allows for the clamp to place and lift the load from any direction, or with a multiple leg sling without side-loading the clamp.

The IPNM10N vertical lifting clamp is used for lifting, turning, moving or vertical transfer of sheet, plates, or fabrications from horizontal to vertical and down to horizontal (180°) as needed without marring the surface of the material. Materials such as aluminum, stainless steel, painted materials, aircraft skins, composite material, glass, plastic, etc., can be lifted without marring. Will not mar, or scratch the material surface.

The IPNM10P vertical lifting clamp is used for lifting, turning, moving or vertical transfer of sheet, plates, or fabrications from horizontal to vertical and down to horizontal (180°) as needed without marring the surface of the material. Materials such as aluminum, stainless steel, painted materials, aircraft skins, composite material, glass, plastic, etc., can be lifted without marring. The protective cover reduces the risk of damage to surrounding plates. Will not mar, or scratch the material surface.

The IPU10A automatically clicks onto the material as soon as the clamp is placed on the plate. The fact that the safety lock remains in position as the clamp closes precludes hazardous situations. Fastening the IPU10A clamp in places that are difficult to reach is no problem.

The IPHNM10 horizontal lifting clamps have a pretension feature that allows the user to attach the clamps to the material for horizontal lifting and transfer of non-sagging material. To be used where material surface must not be damaged. These clamps must be used in pairs or more.

The IPH10 horizontal lifting clamps with spring loaded tension have a pretension feature that allows the user to attach the clamps to the material for horizontal lifting and transfer of non-sagging material. These clamps must be used in pairs or more.

The IPH10E / IPH10JE horizontal lifting clamps are for use in the lifting and transfer in horizontal position of non-sagging materials or of bundles of non-sagging material. These clamps must be used in pairs or more.

The IPHOZ horizontal lifting clamp is to be used for lifting and transferring, in the horizontal position, of thin sheet and other materials that will sag or bend when lifted. These clamps must be used in pairs or more.

The IPPE10 type clamp is suitable for lifting and transferring bundles of non-bendable sheets of metal in a horizontal position. The jaw opening can be easily adjusted for the height of the bundle or plate. The IPPE10 has magnets in the footplate. This allows one person to operate multiple clamps at the same time when lifting loads. These clamps must be used in pairs or more.

The IPPE10BNM lifting clamps may be used for virtually all applications, where the objects that are to be lifted or transported require optimal protection against surface damage. This also applies to materials with a very smooth surface, composites, plates with a protective cover or hard surface plates. These clamps have to be used in pairs.

The IPBC horizontal lifting clamps have a pretension feature that allows the user to attach the clamps to the material for horizontal lifting and transfer of sagging and non-sagging material. These clamps may also be used to handle material that will be used in shears, bending and rolling machines or other fabrication equipment. May also be used for turning beams from the "H" into the "I" position.

Copyright © 2023 The Crosby Group LLC All Rights Reserved

The IPHGZ, IPHGUZ horizontal lifting clamps have a pretension locking feature that allows the user to attach the clamps to the material for horizontal lifting and transfer of sagging and non-sagging material. These clamps may also be used to handle material that will be used in shears, bending and rolling machines or other fabrication equipment. May also be used to move and lift structural shapes such as I-Beams, H-beams etc.

The IPBK10 beam clamp is used for lifting, transferring and stacking H-Beams. A ring-center hoist eye allows for the beam flange to remain vertical. This series of clamps can be used in vertical and horizontal moving, transferring and stacking of different types of structural designs, such as H-Beams, angles, etc, depending on the application desired.

The IPVZ / IPVUZ beam clamp is used for vertical lift and transfer of angle iron and other loads that have only a small gripping area for the clamp ("U" has universal hoisting eye). This series of clamps can be used in vertical and horizontal moving, transferring and stacking of different types of structural designs, such as H-beams, angles, etc, depending on the application desired.

The IPBHZ beam clamp is used for lifting, transferring and stacking I-Beams & H-Beams. An ring-center hoist eye allows for the beam flange to remain vertical. This series of clamps can be used in vertical and horizontal moving, transferring and stacking of different types of structural designs, such as H-Beams, angles, etc, depending on the application desired.

The IPBSNZ beam clamp is used for lifting, transferring and stacking I-Beams. An ring-center hoist eye allows for the beam flange to remain vertical. This series of clamps can be used in vertical and horizontal moving, transferring and stacking of different types of structural designs, such as H-Beams, angles, etc, depending on the application desired.

The IPTK & IPTKW series beam clamp is suitable for use as a temporary tackle eye for a beam.

The IPTKU series beam clamp has an improved hinged hoisting eye that increases the loading angles and an optional new double locking device.

This anchor clamp is suitable as an anchor device for one person, with a personal fall arrest (sheradised and with double locking) system.

The IPSTARTEC11 beam clamp has been specially developed for lifting with the body in vertical position, controlled tilting, transportation and stacking of steel "H" and "I" profiles. By placing the chain guide in the appropriate position, it is easy to switch from lifting to tilting and back again, which shifts the center of gravity.

Copyright © 2023 The Crosby Group LLC All Rights Reserved

The IPSC10 screw style clamp is for positioning, pulling and turning plates or fabrications.

The IPBTO10 shipbuilding clamp is used as a temporary tackle eye in spaces which have been reinforced with HP (bulb) profiles such as engine rooms and shipsections. This clamp is fitted with a screwed spindle for easy attachment of the clamp. The moment a load is applied, the clamp is automatically fixed.

The IPBUZ shipbuilding clamps are used for lifting, transferring and placing bulb profiles onto ship's hulls perpendicularly. These clamps are fitted with a locking device for both open and closed positions, which ensures complete reliability. They are to be used exclusively for bulb profiles (not for plates).

The IPSBU(U)Z shipbuilding clamps are used for the lifting, transfer and placing of complete shipsections. These clamps are fitted with a locking device for both open and closed positions, which ensures complete reliability. They are to be used exclusively for bulb profiles (not for plates).

The IPDV drum clamp is for vertical lift and transfer. Allows drum to remain in an upright position during the lift and transfer using one clamp.

The IPVK drum clamp is for vertical lift and transfer. Automatically locks on drum, and can be used alone or in pairs.

The IPCC is suitable for the vertical lifting and transfer of concrete pipe sections and wells. Very easy application and removal of the clamp thanks to the built-in carrying-grips. Normally used in combination with 7mm chain (not supplied). These clamps must be used in pairs or more.

ASEAN JSC.VN
ASEAN DEVELOPMENT JOINT STOCK COMPANY
ISO 9001:2015
Since 2006

Copyright © 2023 The Crosby Group LLC All Rights Reserved

LOAD SECUREMENT

The safest and strongest in load securement with renowned premier brands.

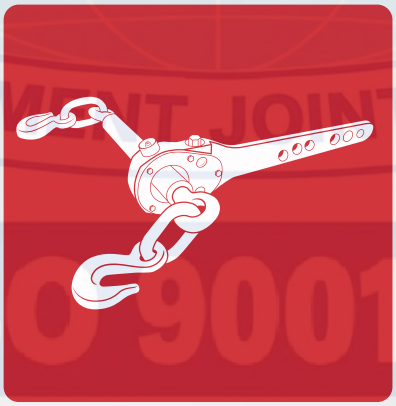

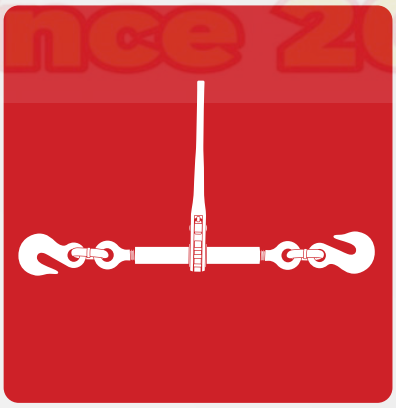

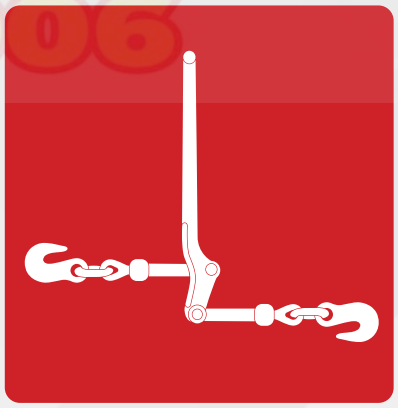

CÔNG TY CỔ PHẦN PHÁT TRIỂN KINH TẾ ĐẠI DƯƠNG NAMÁ
ASEAN JSC.VN
ASEAN DEVELOPMENT JOINT STOCK COMPANY
ISO 9001:2015
Since 2006

the Crosby group®

thecrosbygroup.com

Speedbinders™

EFFICIENT & ERGONOMIC LOAD SECUREMENT TECHNOLOGY

Speedbinders is changing the load binder industry with its patented Torque Drive technology. Our line of products provide considerable time saving benefits for drivers as well as enhanced benefits by eliminating repetitive, straining operations.

TD-66

- Blue marking
- Common applications: Light equipment transport & logging
- 3:1 design factor

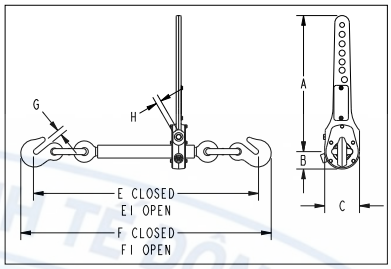

Model	Stock No.	Min-Max Chain Size (mm)	Working Load Limit (kg)	Proof Load (kg)	Weight Each (kg)	Dimensions (mm)								
						A	B	C	E	E1	F	F1	G	H
TD-66	3674481	8 - 10	2994	4491	6	357	46	91	585	813	642	870	13	13

TD-92

- Red marking
- Common applications: Equipment transport, heavy towing & steel coil transport
- 3:1 design factor

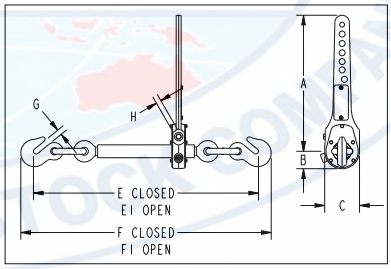

Model	Stock No.	Min-Max Chain Size (mm)	Working Load Limit (kg)	Proof Load (kg)	Weight Each (kg)	Dimensions (mm)								
						A	B	C	E	E1	F	F1	G	H
TD-92	3674490	10 - 13	4173	6260	7	357	46	91	591	819	657	886	14	13

TD-13

- Green marking
- Common applications: Equipment transport, heavy hauling & steel coil transport
- 3:1 design factor

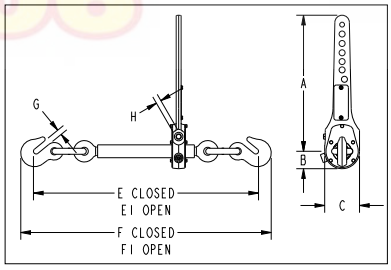

Model	Stock No.	Min-Max Chain Size (mm)	Working Load Limit (kg)	Proof Load (kg)	Weight Each (kg)	Dimensions (mm)								
						A	B	C	E	E1	F	F1	G	H
TD-13	3674499	13 - 16	5897	8846	9	357	46	91	671	899	750	979	18	13

Spare drive bolts and grease zerks available

APPLICATION AND WARNING INFORMATION
SECTION 17

Copyright © 2023 The Crosby Group LLC All Rights Reserved

Crosby LEBUS L-140

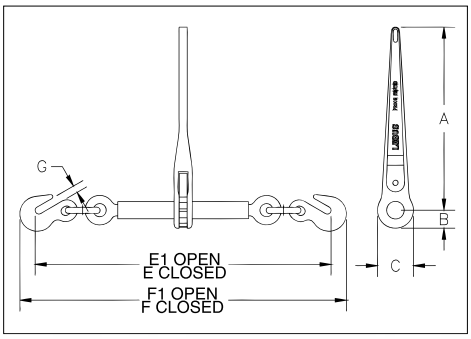

Load Rated

APPLICATION AND WARNING INFORMATION
SECTION 17

- Upgraded for use with Grades 70, 80 and 100 Chain.
- Utilizes standard Crosby A-323 Alloy Eye Grab Hooks.
- New design one piece forged handle.
- Continuous take-up feature provides finite adjustment to tie down load.
- One piece assembly, no bolts or nuts to loosen.
- Ratchet spring is rust proofed.
- All load bearing or holding parts forged.
- Easy operating positive ratchet.
- Binders shown with Proof Loads have been individually proof tested to values shown, prior to shipment.
- Meets or exceeds requirements of US DOT FMCSA Part 393 Subpart I.
- Matches the Working Load Limit of Grade 100 chain except for 16mm size.

Crosby LEBUS L-140 Standard Ratchet Type Load Binders

Model	Stock No.	Min-Max Chain Size (mm)	Working Load Limit (t)	Proof Load (kN)	Weight Each (kg)	Handle Length (mm)	Barrel Length (mm)	Take Up (mm)	Dimensions (mm)							
									A	B	C	E	E1	F	F1	G
R-7	1048404	8 - 10	3.99	79	5.49	356	254	203	356	35.1	70.0	583	786	638	842	12.7
R-A	1048422	10 - 13	6.80	134	6.66	356	254	203	356	35.1	70.0	641	845	702	905	16.0
R-C	1048440	13 - 16	7.26	143	6.60	356	254	203	356	35.1	70.0	670	873	748	951	18.3

3:1 Design Factor.

Crosby LEBUS R-10

- Meets or exceeds requirements of US DOT FMCSA Part 393 Subpart I.

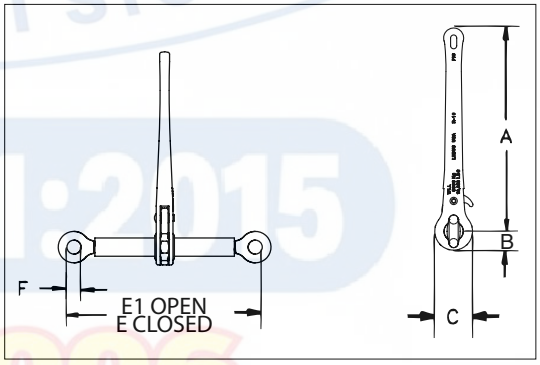

Crosby LEBUS R-10 Binder without Links and Hooks

Model	Stock No.	Working Load Limit (t)	Weight Each (kg)	Handle Length (mm)	Barrel Length (mm)	Take Up (mm)	Dimensions (mm)					
							A	B	C	E	E1	F
R-10	1048468	7.26	3.65	356	254	203	356	35.1	70.0	356	559	25.4

3:1 Design Factor.

Copyright © 2023 The Crosby Group LLC All Rights Reserved

Crosby

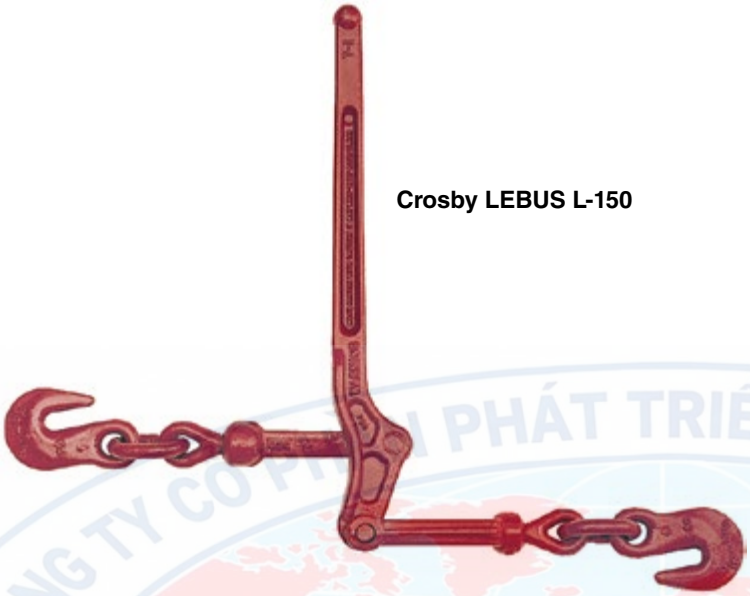

Crosby LEBUS L-150

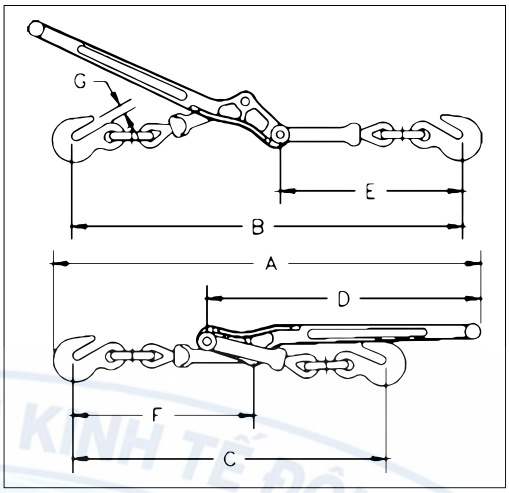

Load Rated

APPLICATION AND WARNING INFORMATION
SECTION 17

- Extra heavy construction at leverage point to prevent spreading. Heel of binder toggles away from load, permitting easy release.
- Ball and socket swivel joints at hook assemblies permit a straight line pull.
- Binders shown with Proof Loads have been individually proof tested to values shown, prior to shipment.
- Forged steel – Quenched & Tempered.
- Meets or exceeds requirements of US DOT FMCSA Part 393 Subpart I.

Crosby LEBUS L-150 Standard Lever Type Load Binders

Model	Stock No.	Std. Pkg.	Min-Max Chain Size (mm)	Working Load Limit (t)	Proof Load (kN)	Ultimate Load (t)	Weight Each (kg)	Handle Length (mm)	Take Up (mm)	Dimensions (mm)						
										A	B	C	D	E	F	G
7-1	1048128	4	8 - 10	2.45	48	8.63	3.18	406	114	613	562	454	406	264	264	12.7
A-1	1048146	4	10 - 13	4.17	82	15.0	5.66	475	114	730	654	540	475	313	314	16.0
C-1	1048164	4	13 - 16	5.90	116	20.9	8.93	533	121	794	756	635	533	372	349	18.3

CÔNG TY CỔ PHẦN PHÁT TRIỂN KINH TẾ ĐẠI DƯƠNG
OCEAN JSC.VN
ASEAN DEVELOPMENT STOCK COMPANY
ISO 9001:2015
Since 2006

Copyright © 2023 The Crosby Group LLC All Rights Reserved

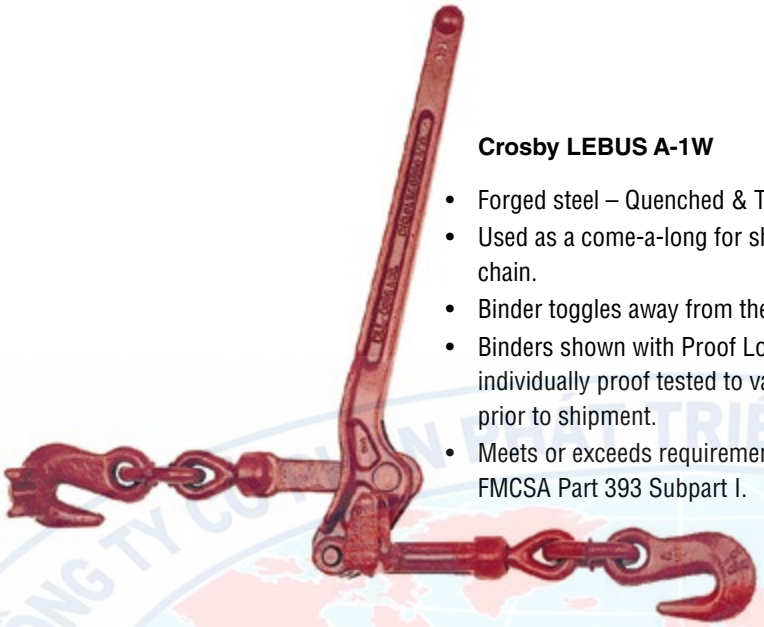

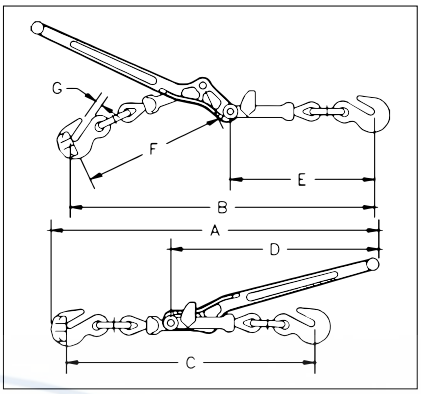

Crosby LEBUS A-1W

- Forged steel – Quenched & Tempered.
- Used as a come-a-long for short take-up on chain.
- Binder toggles away from the load.
- Binders shown with Proof Loads have been individually proof tested to values shown, prior to shipment.
- Meets or exceeds requirements of US DOT FMCSA Part 393 Subpart I.

APPLICATION AND WARNING INFORMATION
SECTION 17

Crosby LEBUS A-1W Walking Load Binders

Model	Stock No.	Chain Size (mm)	Working Load Limit (t)	Proof Load (kN)	Ultimate Load (t)	Weight Each (kg)	Handle Length (mm)	Dimensions (mm)						
								A	B	C	D	E	F	G
A-1W	1048388	13 only	4.17	82	15.0	5.94	475	730	654	540	475	313	314	16.0

Copyright © 2023 The Crosby Group LLC All Rights Reserved

Crosby

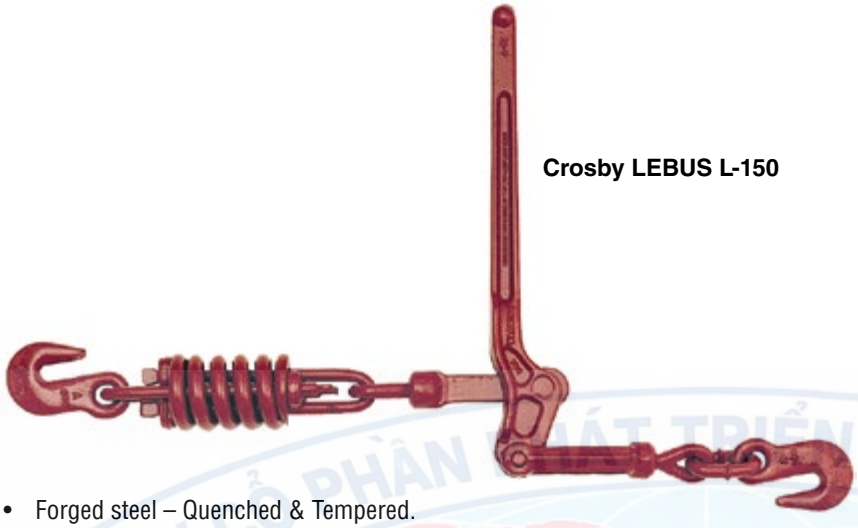

Crosby LEBUS L-150

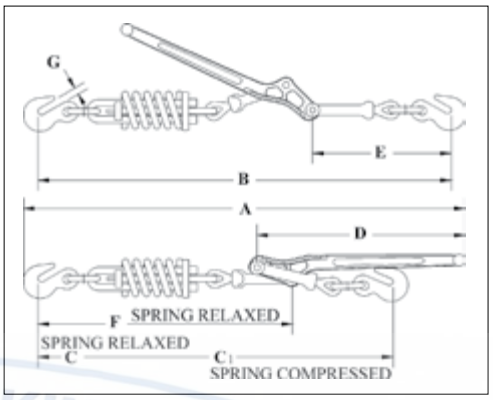

- Forged steel – Quenched & Tempered.
- Spring cushion for load protection, cushions shock and sway.
- Binder toggles away from the load.

APPLICATION AND WARNING INFORMATION
SECTION 17

Crosby LEBUS L-150 Snubbing Load Binders

Model	Stock No.	Min-Max Chain Size (mm)	Working Load Limit (t)	Ultimate Load (t)	Weight Each (kg)	Handle Length (mm)	Take Up (mm)	Compression Strength of Spring (kg)	Dimensions (mm)							
									A	B	C	C1	D	E	F	G
7-12	1048280	8 - 10	2.45	7.27	5.10	406	108	1040	832	781	711	673	406	264	483	12.7
A-12	1048306	10 - 13	4.17	9.09	8.48	470	114	1500	945	864	749	773	475	313	530	16.0

Crosby LEBUS C-188 Spectrum 8®

- Heat treated alloy steel.
- Ends fitted with Crosby A-330 Quenched & Tempered alloy clevis grab hook.
- Finish – self colored.
- Meets or exceeds requirements of US DOT FMCSA Part 393 Subpart I.

Crosby LEBUS C-188 Spectrum 8® Alloy Boomer Chains

Chain Size (mm)	Stock No.	Working Load Limit (kg)	Standard Length (m)	Weight Each (kg)
10	279889	3200	6.10	13.7
13	279898	5400	6.10	24.5

Crosby LEBUS L-180

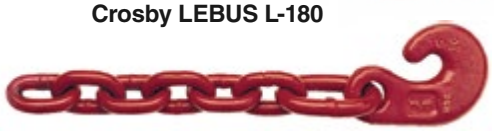

- Hooks are Forged – Quenched & Tempered.
- Individually Proof Tested.
- Spectrum 8® alloy steel from 20mm through 32mm (3/4" - 1-1/4").
- Meets or exceeds requirements of US DOT FMCSA Part 393 Subpart I.

Crosby LEBUS L-180 Winchline Tail Chain

Wire Rope Diameter (mm)*	Stock No.	Working Load Limit (kg)†	Length (mm)	No. of Links	Weight Each (kg)
8 - 10	1091473	2450	18	11	1.36
13 - 16	1091482	5900	18	7	2.81
19 - 22	1091511	15510	24	8	8.25
25 - 29	1091516	21640	18	5	9.60
25 - 29	1091525	21640	24	7	10.6
32	1091532	32795	24	5	18.1

* Recommended for IPS or XIP (EIP), RRL, FC or IWRC wire rope. † Ultimate Load is 3.5 times the Working Load Limit.

Copyright © 2023 The Crosby Group LLC All Rights Reserved

S-247
Double Clevis Link

- All pins alloy steel - Quenched & Tempered.
- Body is forged and heat treated carbon steel.
- Designed for linking all popular sizes of Grade 3 and Grade 4 chain to rings, end links, eye hooks, pad eyes, tractor eye bolts, etc.
- Features quick and easy assembly.

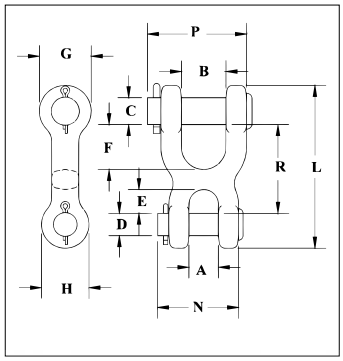

S-247 Double Clevis Link

Chain Size (mm)	Stock No.	Working Load Limit (t)	Weight Each (kg)	Dimensions (mm)											
				A	B	C	D	E	F	G	H	L	N	P	R
7	1013021	1.18	.17	12.7	19.1	12.7	7.85	9.65	19.1	25.4	20.6	71.5	35.1	42.2	38.1
8-10	1013049	2.45	.37	14.2	25.4	16.0	11.2	11.9	25.4	30.2	25.4	89.5	44.5	57.0	48.5
11	1013067	3.27	.57	17.5	28.7	17.5	14.2	15.0	27.7	33.3	30.2	103	51.0	63.5	55.5
13	1013085	4.17	.71	20.6	31.8	19.1	16.0	17.3	31.8	36.6	33.3	115	57.0	70.0	62.5

* Ultimate Load is 4 times the Working Load Limit.

Not Suitable for use with Grade 80 or Grade 100 chain and chain slings used in overhead lifting.

S-249
Twin Clevis Link

- Available in three popular sizes.
- Body is forged and heat treated carbon steel.
- All pins alloy steel - Quenched & Tempered.
- Features quick and easy assembly.
- Twin Clevis design provides a variety of uses and can be used with Grade 3, Grade 4 and Grade 7 chain.

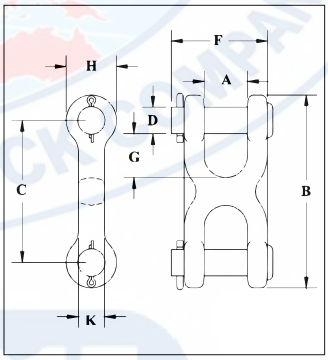

S-249 Twin Clevis Link

Chain Size (mm)	Stock No.	Working Load Limit (t)	Weight Each (kg)	Dimensions (mm)							
				A	B	C	D	F	G	H	K
7-8	1012861	2.13	.14	11.9	63.5	39.6	9.65	33.3	10.9	23.9	12.7
10	1012889	3.00	.20	13.5	71.5	46.0	11.2	38.9	12.7	25.4	14.2
11-13	1012905	5.10	.44	16.5	92.0	58.5	14.2	48.5	16.0	33.3	20.6

4:1 Design Factor.

Not Suitable for use with Grade 80 or Grade 100 chain and chain slings used in overhead lifting.

Copyright © 2023 The Crosby Group LLC All Rights Reserved

Crosby

A-330
Clevis Grab Hook

- Forged steel - Quenched & Tempered.
- Design factor is 4:1.
- Features quick and easy assembly.
- Designed for Grade 8 chain.

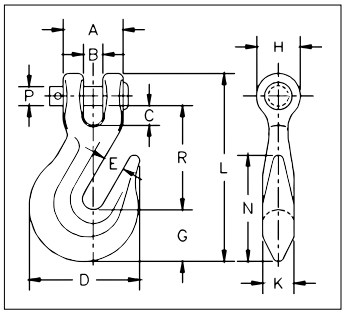

A-330 Clevis Grab Hooks

Chain Size (mm)	Stock No.	Working Load Limit (t)	Weight Each (kg)	Dimensions (mm) A	B	C	D	E	G	H	K	L	N	P	R
7	1027249*	1.59	.16	25.4	8.15	8.15	46.0	8.65	22.4	18.3	11.9	77.5	44.5	7.85	41.7
8	1027267*	2.04	.29	30.2	9.90	9.90	54.0	11.2	24.6	23.1	15.0	93.0	52.5	9.65	61.5
10	1027285*	3.22	.45	35.1	11.4	11.4	64.5	12.7	29.7	25.4	18.3	109	59.5	11.2	61.0
13	1027329*	8.21	.95	47.8	14.5	14.5	90.5	16.8	38.9	31.8	19.8	145	75.5	16.0	81.0
16	1027347	11.2	1.91	58.0	23.1	23.1	112	19.8	45.2	39.6	27.7	179	109	19.1	104
19	1027365	11.2	2.95	66.5	23.9	23.9	133	23.9	54.0	47.8	33.3	207	129	22.4	118

* These A-330 hooks are forged with an "8" designating Grade 80, and are suitable for use with Grade 8 chain in overhead lifting applications as long as the hook is proof-tested as part of the chain sling assembly or as an individual component per ASME B30.9. We recommend the use of the A-1338 / A-1358 which is proof tested and supplied with a proof test certificate.

A-323
Eye Grab Hook

- Forged steel - Quenched & Tempered.
- Design Factor is 4:1.
- Designed for Grade 8 chain.

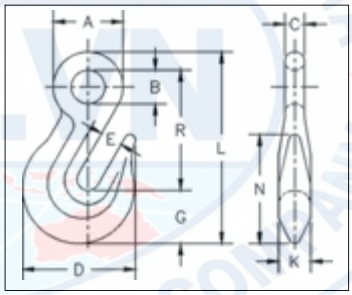

A-323 Eye Grab Hooks

Chain Size (mm)	Stock No.	Working Load Limit (t)	Weight Each (kg)	Dimensions (mm) A	B	C	D	E	G	K	L	N	R
7	1026384*	1.59	.13	27.7	13.5	7.85	46.0	8.65	22.4	11.9	77.5	44.5	47.8
8	1026400*	2.04	.20	33.3	15.7	9.65	54.0	11.2	24.6	15.0	91.0	52.5	58.0
10	1026428*	3.22	.36	39.6	19.1	11.2	64.5	12.7	29.7	18.3	109	59.5	68.5
13	1026464*	5.44	.79	49.3	22.4	13.5	90.5	16.8	38.9	19.5	138	75.5	86.0
16	1026482*	8.21	1.47	60.5	26.9	16.8	112	19.8	48.0	25.4	169	96.0	104
19	1026507	11.2	2.69	73.0	35.1	19.1	133	23.9	54.0	33.3	205	129	131

* These A-323 hooks are forged with an "8" designating Grade 80, and are suitable for use with Grade 8 chain in overhead lifting applications as long as the hook is proof-tested as part of the chain sling assembly or as an individual component per ASME B30.9. We recommend the use of the A-1328 which is proof tested and supplied with a proof test certificate.

A-331
Clevis Slip Hook

- Forged alloy steel – Quenched & Tempered.
- All pins are alloy steel – Quenched & Tempered.
- Not suitable for use with Grade 80 chain and chain slings used in overhead lifting. For slings or lifting chains, Grade 80 or 100 alloy components are recommended.

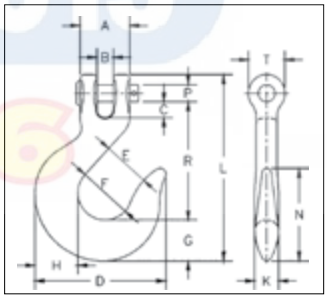

A-331 Clevis Slip Hooks

Chain Size (mm)	Stock No.	Working Load Limit (t)	Weight Each (kg)	Dimensions (mm) A	B	C	D	E	F	G	H	K	L	N	P	R	T
7	1027524	1.25	.25	26.9	8.15	7.35	70.0	23.9	30.2	20.6	22.4	12.7	100	54.0	7.87	65.5	18.3
8	1027542	1.95	.36	31.0	10.9	8.65	77.5	26.9	31.8	23.9	25.4	14.2	115	57.0	9.65	73.0	24.6
10	1027560	2.38	.55	35.1	11.4	11.2	92.0	33.3	38.1	28.7	30.2	16.8	131	65.0	11.2	82.5	26.9
11	1027588	3.18	.93	43.9	15.0	15.2	110	39.6	46.0	35.1	36.6	20.6	152	77.5	14.2	94.0	30.2
13	1027604	4.08	1.25	47.8	14.5	13.5	122	42.9	49.3	39.6	41.4	23.1	166	87.5	16.0	102	33.3
16	1027622	6.12	2.15	58.5	18.0	18.0	143	51.0	60.5	46.0	49.3	27.7	200	102	19.1	125	39.6
19	1027640	8.73	5.12	81.0	30.0	32.8	187	63.5	76.2	60.5	63.5	36.6	255	129	25.4	155	53.0

4:1 Design Factor.

Copyright © 2023 The Crosby Group LLC All Rights Reserved

SHEAVES

Roll-forged sheaves that provide an upset metal flow without creating a stress zone at the splitting point.

CÔNG TY CỔ PHẦN PHÁT TRIỂN KINH TẾ ĐÔNG NAM Á
ASEAN JSC.VN
ASEAN DEVELOPMENT JOINT STOCK COMPANY
ISO 9001:2015
Since 2006

CROSBY VALUE ADDED

McKissick® Roll-Forged Heavy Duty Sheaves are made by upsetting and forming the groove and flange walls in multiple steps, eliminating the need to split and weaken the groove. This exclusive forging process adds extra strength to the critical groove section.

McKissick Domed Reinforced Extreme Duty Roll Forged Sheaves are welded in a circular pattern thus eliminating the higher stresses created by welding ribs or other forms of stiffeners.

McKissick Heavy Duty Sheaves are available with machined groove rings or machine forged rings utilized for the rim or hub.

McKissick Heavy Duty Closed-Die Forged Sheaves offer the performance of closed-die forging with the precision machining capabilities of CNC machinery.

McKissick Normal Duty Malleable Cast Sheaves provide economical solutions for normal service applications.

McKissick Sheaves come in a variety of sizes to suit your specific applications. Crosby offers many sheaves as standard and these are shown in the pages that follow. For applications that require unique specifications, Crosby can make minor modifications to many of the sheaves listed at a reasonable charge. We can also custom design and manufacture sheaves to your exact requirements. McKissick roll forged sheaves can be furnished balanced or with lightening holes at a reasonable charge on request.

Crosby's hardening technique is a science. It provides a precise maximum hardness for wear-resistance across the wire rope contact area. The McKissick sheave groove is flame hardened to a minimum 35 Rockwell C for a 140° contact area with the wire rope (upon special request the McKissick sheave groove can be flame hardened to a minimum 50 Rockwell C for a 150° contact area with the wire rope). The solid steel plate provides the ideal surface for flame hardening and a closer tolerance fit to the wire rope to reduce fatigue and wear.

The **McKissick hub** is stepped to eliminate stress failure in the weld, common in traditional hub designs. The hub is pressed into place with complete metal-to-metal contact. This helps ensure an accurate alignment to the hub's axis so there is no wobble or lopping of the rotating sheave. The precision aligned hub / sheave wheel combination adds to the bearing life and keeps the sheave on the job longer.

McKISSICK® STANDARD BEARINGS

(B) Bronze Bushing | (R) Roller Bearings | (W) Roller Bearing with Thrust Washers | (C) Full Complement Cylindrical Roller Bearing | (T) Tapered Roller Bearing

ORDERING INSTRUCTIONS

The following information should be specified when ordering blocks and sheaves:

Blocks

- Wire rope diameter
- Sheave OD
- Shaft or bore size
- Bearing type or plain bore
- Hub width
- Rim width
- Stock number (if known)
- Special machine features
- Special finishes

If hub or rim dimensions necessitate a dimension other than those shown in this catalog, please contact The Crosby Group for minimums and maximums. Tapered roller bearing sheaves show width over bearing cones, which cannot be altered.

Price and delivery for your special needs, if not shown, are available upon request.

Copyright © 2023 The Crosby Group LLC All Rights Reserved

McKissick® Sheaves Bearings Application Information

BRONZE BUSHING

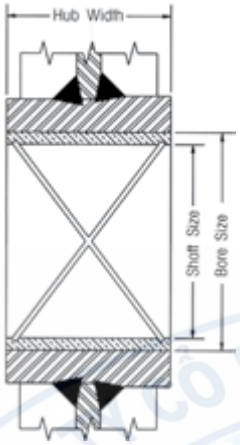

Slow line speed, moderate load and moderate use

- Maximum Bearing Pressure (BP): 31N/mm²
- Maximum Velocity at Bearing (BV): 366m/min
- Maximum Pressure Velocity Factor (PV): 114

$$\text{Formula for BP} = \frac{\text{Line Pull x Angle Factor}}{\text{Shaft Size x Hub Width}}$$

For underwater sheave applications, special bronze bushings are available. Consult the bearing manufacturer for applicable load.

Example

Using a 356mm sheave (917191) with a 20,000 N line pull and an 80 degree angle between lines, determine maximum allowable line speed:

$$BP = \frac{\overset{\text{Line Pull}}{20{,}000\text{N}} \times \overset{\text{Angle Factor}}{1.53}}{\underset{\text{Shaft Size}}{38} \times \underset{\text{Hub Width}}{41}} = 2{,}896 \text{ PSI}$$

$$BV = \frac{\overset{\text{PV Factor}}{114}}{\underset{\text{BP}}{19{,}64}} = 5{,}8\text{m/min}$$

ROLLER BEARINGS

Bronze Bushings with Fig. 8 oil grooves are made from SAE 660 bronze for cold-finished shafts.

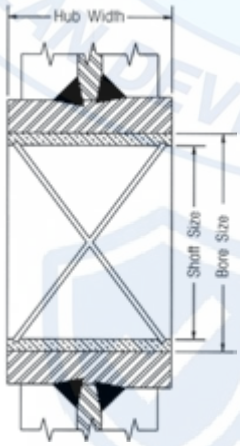

Roller Bearings are designed to operate on shafts carborized to 60 Rockwell C and grounded to +/- .0005 of shaft size.

STANDARD STRAIGHT ROLLER BEARINGS

Heavier loads, higher speeds, more frequent use, radial loads only.

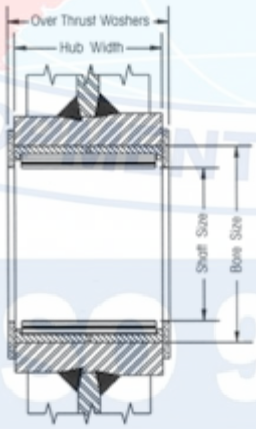

Roller Bearings without inner races are designed to operate on shafts carborized to 60 Rockwell C and grounded to +/- .0005 of shaft size.

FULL COMPLEMENT, DOUBLE ROW, ROLLER BEARING

Heavy load, high speeds, continuous operation, axial, and radial loads.

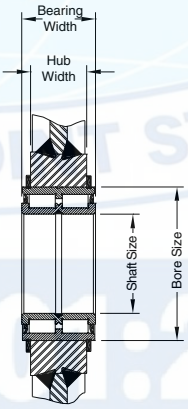

Cylindrical Roller Bearings with snap ring grooves are complete units with outer and inner rings, rib-guided cylindrical rollers, and sealing rings. They can support axial forces in both directions, as well as radial forces. They have high dynamic and static load ratings.

TAPERED ROLLER BEARINGS

Heavy loads, high speeds, continuous operation, axial, and radial loads.

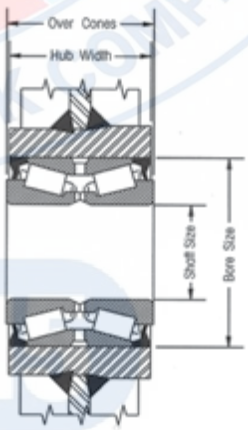

Tapered Bearings are designed to operate on shafts machined to +/- .0005 of shaft size. Applications should provide for tightening separator plates against bearing cones to adjust and insure proper function of bearings.

Copyright © 2023 The Crosby Group LLC All Rights Reserved

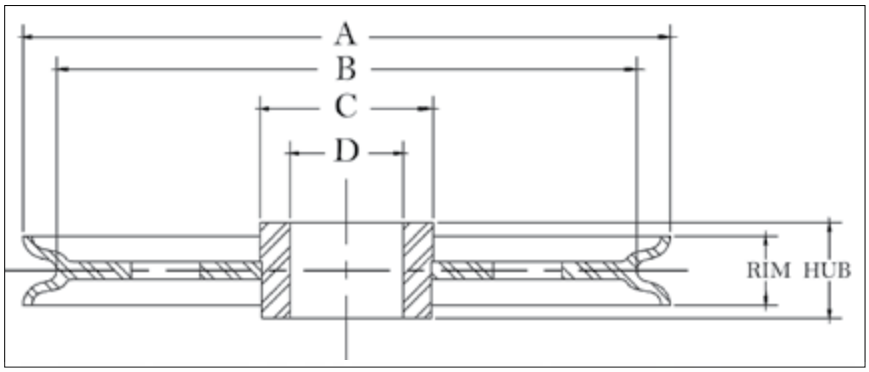

APPLICATION AND WARNING INFORMATION
SECTION 17

McKissick® Plain Bore Sheaves

- Roll-Forged™ sheaves are available in sizes up to 1981mm diameter.
- McKissick® Plain Bore Sheaves can be equipped with bushings or bearings at an optional charge.
- 356mm diameter sheaves and larger are Roll-Forged with Flame hardened grooves to minimum Rockwell 35C, unless otherwise noted.

"A" Nominal Outside Diameter (mm)	Stock Number	Wire Rope Diameter (mm)	"D" Bore Size (mm)	Hub Width (mm)	Rim Width (mm)	"C" Nominal Hub Outside Diameter (mm)	"B" Nominal Tread Diameter (mm)	Material	Approx. Weight (kg)
76.0	51008	6	19.1	33.3	31.8	28.6	52.5	B.S.	0.45
76.0	11310	10	19.1	33.3	31.8	28.6	52.5	B.S.	0.45
102	51044	6	39.9	25.4	22.2	51.0	79.5	B.S.	0.91
102	1189	10	39.9	25.4	22.2	51.0	79.5	B.S.	0.91
124	2026409	16	44.4	31.8	28.6	57.0	103	F.S.	1.63
149	2023136	19	47.6	44.5	41.3	63.5	111	F.S.	2.72
152	51124	10	41.3	28.6	25.4	57.0	125	F.S.	1.81
152	13014	13	41.3	28.6	25.4	57.0	125	F.S.	1.81
178	51437	6	47.6	34.9	19.1	60.5	159	B.S.	2.81
178	3203	10	47.6	34.9	19.1	60.5	159	B.S.	2.81
203	61710	13	46.9	33.3	31.8	62.0	168	F.S.	3.63
203	2023144	13	47.7	44.5	41.3	65.0	160	F.S.	4.54
203	51598	16	47.6	38.1	34.9	62.0	168	F.S.	3.18
203	2023146	16	47.7	44.5	41.3	65.0	160	F.S.	4.54
203	5194	19	47.6	38.1	34.9	62.0	168	F.S.	3.18
203	2023152	19	47.7	44.5	41.3	65.0	160	F.S.	4.54
203	2023466	26	70.0	63.5	60.5	102	133	F.S.	6.8
216	61747	10	46.9	33.3	25.4	70.0	191	D.I.	4.99
251	51918	10	76.0	44.5	28.6	95.5	217	F.S.	6.35
251	2023154	13	47.6	44.5	41.3	65.0	211	F.S.	6.58
251	6040	13	76.0	44.5	28.6	95.5	217	B.S.	6.35
251	5675	16	34.9	38.1	34.9	82.5	216	F.S.	4.31
251	2023169	16	47.6	44.5	41.3	65.0	211	F.S.	6.58
251	2023173	19	47.6	44.5	41.3	65.0	211	F.S.	6.58
251	2023419	22	63.5	58.5	55.5	89.0	206	F.S.	6.8
254	2023784	28	102	63.5	60.5	146	187	F.S.	12.3
305	2023247	16	47.7	44.5	41.3	82.5	257	F.S.	8.15
305	2023234	19	47.7	44.5	41.3	82.5	248	F.S.	8.15
305	52285	19	76.0	44.5	41.3	114	248	R.F.	7.26
305	2026537	19	76.0	55.5	55.5	114	248	R.F.	10.9
305	62283	22	76.0	55.5	55.5	114	260	R.F.	10.9
305	2030845	26	63.5	58.5	55.5	102	238	R.F.	10.9
330	33653	10	63.5	38.1	28.6	89.0	295	R.F.	6.35
330	50704	13	63.5	38.1	28.6	89.0	295	R.F.	6.35
356	*52720	13	108	63.5	34.9	129	321	D.I.	6.8
356	2023249	16	47.7	44.5	41.3	82.5	308	R.F.	9.07
356	4013098	16	63.5	44.5	41.3	114	308	R.F.	14.1
356	4013187	16	60.5	44.5	41.3	114	308	R.F.	13.6
356	4013105	19	63.5	44.5	41.3	114	299	R.F.	14.1
356	4016503	19	82.5	58.5	55.5	140	299	R.F.	15.4
356	2023564	28	70.0	63.5	60.5	114	289	R.F.	12.7
406	4010046	19	108	70.0	63.5	146	340	R.F.	11.3
406	4010126	26	108	70.0	63.5	146	340	R.F.	19.1
457	4010493	22	89.0	58.7	55.5	140	379	R.F.	29
508	*4014024	8	108	70.0	34.9	146	479	R.F.	20.4
508	4010616	19	89.0	58.5	55.5	140	457	R.F.	29.9
508	4010885	19	108	70.0	54.0	165	457	R.F.	36.3
508	4013613	26	95.0	58.5	55.5	140	419	R.F.	34.5
508	4010625	22	89.0	58.5	55.5	140	430	R.F.	33.6

Custom sheaves are available.

Copyright © 2023 The Crosby Group LLC All Rights Reserved

McKissick® Plain Bore Sheaves

"A" Nominal Outside Diameter (mm)	Stock Number	Wire Rope Diameter (mm)	"D" Bore Size (mm)	Hub Width (mm)	Rim Width (mm)	"C" Nominal Hub Outside Diameter (mm)	"B" Nominal Tread Diameter (mm)	Material	Approx. Weight (kg)
508	4010901	26	108	70.0	54.0	165	419	R.F.	36.3
610	4012749	14	165	85.5	79.5	203	559	R.F.	67
610	*4014408	16	120	70.0	38.1	165	553	R.F.	54
610	4011385	26	76.0	63.5	60.5	114	537	R.F.	56.7
610	4012785	26	155	73.0	66.5	203	537	R.F.	59
610	4011223	28	114	76.0	70.0	165	510	R.F.	59
610	2029333	28	165	85.5	79.5	203	510	R.F.	60
610	4011410	38	165	85.5	79.5	210	508	R.F.	84.3
762	2026302	22	165	85.5	79.5	203	686	R.F.	84.3
762	2029382	32	200	89.0	79.5	241	670	R.F.	102
914	4012160	28	165	85.5	79.5	210	819	R.F.	154
914	4012730	38	200	89.0	82.5	241	813	R.F.	137
1067	4015844	38	225	92.0	82.5	279	978	R.F.	209
1067	4015853	32	225	92.0	82.5	279	975	R.F.	209
1067	4015719	32	276	92.0	85.5	318	975	R.F.	201
1067	4015719	32	276	92.0	85.5	318	975	R.F.	201

*Without flame hardening.

Custom sheaves are available.

VIDEO PODCAST SERIES

Our experts answer some of your most common safe rigging, lifting, and securement questions in our video podcast series, *Ask the Expert*.

Watch four episodes on sheaves:

- Bronze bushing vs roller bushing
- Understanding groove hardness
- How to know when it's time to replace sheaves
- How to extend the life of a sheave

Ask the Expert
VIDEO PODCAST

thecrosbygroup.com/podcast-sheaves

Be sure to subscribe to The Crosby Group's YouTube channel to catch every new video as soon as it's released.

Ep. 27 Sheaves: bronze bushing vs roller bushing

Ep. 32 How to know when it's time to repace sheaves

Ep. 30 Understanding sheave groove hardness

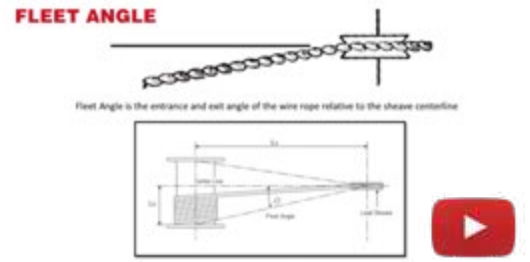

Ep. 34 How to extend the life of a sheave

Copyright © 2023 The Crosby Group LLC All Rights Reserved

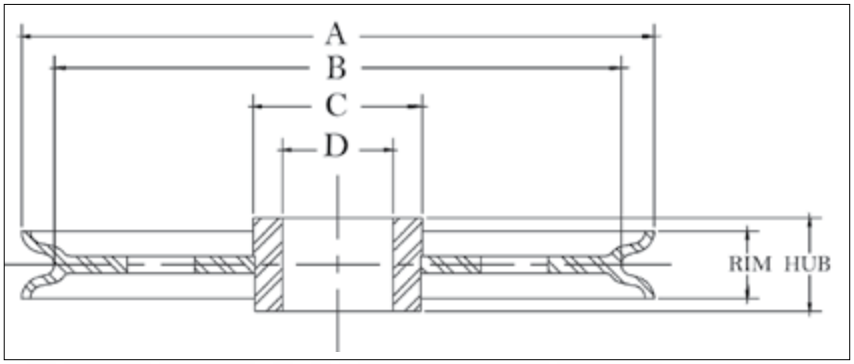

APPLICATION AND WARNING INFORMATION
SECTION 17

McKissick® Common Bore Sheaves

- Roll-Forged sheaves are available in sizes up to 1981mm diameter.
- Common Bore or Plain Bore are terms used when there is merely a hole bored in the center of the sheave.
- Common Bore Sheaves are machined for a running fit for the shaft size listed, and no bearing or bushing is installed.

"A" Nominal Outside Diameter (mm)	Stock Number	Wire Rope Diameter (mm)	"D" Shaft Size (mm)	Hub Width (mm)	Rim Width (mm)	"C" Nominal Hub Outside Diameter (mm)	"B" Nominal Tread Diameter (mm)	Material	Approx. Weight (kg)
76.0	905051	5	9.55	19.8	19.1	25.4	60.5	P.M.	.45
76.0	905079	5	12.7	19.8	19.1	25.4	60.5	P.M.	.45
76.0	905097	5	15.9	19.8	19.1	25.4	60.5	P.M.	.45
76.0	905024	6	9.55	12.7	12.7	25.4	66.5	P.M.	.34
76.0	905042	6	12.7	12.7	12.7	25.4	66.5	P.M.	.34
102	905122	8	12.7	19.1	15.9	34.9	89.0	P.M.	.45
102	905140	8	15.9	19.1	15.9	34.9	89.0	P.M.	.45
102	905168	10	12.7	20.6	19.1	38.1	82.5	P.M.	.57
102	905202	10	19.1	20.6	19.1	38.1	82.5	P.M.	.57
102	905220	13	12.7	27.0	25.4	41.3	81.0	P.M.	.68
102	905248	13	15.9	27.0	25.4	41.3	81.0	P.M.	.68
127	905293	5	19.1	23.8	22.2	57.0	108	P.M.	1.02
127	905300	10	19.1	23.8	22.2	57.0	108	P.M.	1.02
127	905328	13	15.9	27.0	25.4	57.0	102	P.M.	1.13
152	905426	10	12.7	20.6	19.1	47.6	127	D.I.	1.13
152	905480	10	12.7	27.0	25.4	47.6	127	D.I.	1.13
152	905462	10	15.9	20.6	19.1	47.6	127	P.M.	1.13
152	905523	10	19.1	27.0	25.4	47.6	127	P.M.	1.89
171	905701	10	19.1	30.2	28.6	51.0	149	D.I.	2.27
203	905747	13	19.1	28.6	25.4	60.5	175	D.I.	2.27
203	905783	13	25.4	28.6	25.4	60.5	175	D.I.	3.86
203	905809	16	19.1	34.9	31.8	51.0	165	D.I.	2.72
203	905845	16	25.4	34.9	31.8	51.0	165	D.I.	3.06
203	909324	16	25.4	34.9	31.8	63.5	168	D.I.	3.86
203	909342	16	28.6	34.9	31.8	63.5	168	D.I.	3.86
203	909360	16	31.8	34.9	31.8	63.5	168	D.I.	3.86
203	909388	16	38.1	34.9	31.8	63.5	168	D.I.	3.86
254	905943	13	25.4	28.6	25.4	73.0	222	D.I.	4.54
254	906005	16	25.4	34.9	31.8	76.0	216	D.I.	4.20
254	909761	16	38.1	34.9	31.8	76.0	216	D.I.	6.12
305	906041	13	25.4	28.6	25.4	102	270	D.I.	7.48
305	906087	13	31.8	28.6	25.4	102	270	D.I.	7.48
305	906247	22	38.1	51.0	44.5	95.5	254	D.I.	9.19
356	*906283	19	28.6	41.3	38.1	82.5	311	C.I.	12
356	*906309	19	31.8	41.3	38.1	82.5	311	C.I.	12
457	910820	26	51.0	51.0	47.6	102	378	R.F.	28.1

Material: B.S.=Bar Steel, C.I.=Cast Iron, F.S.=Forged Steel, D.I.=Ductile Iron, C.S.=Cast Steel, P.M.=Powdered Metal, R.F.=Roll-Forged.
*Without flame hardening groove.

Custom sheaves are available.

Copyright © 2023 The Crosby Group LLC All Rights Reserved

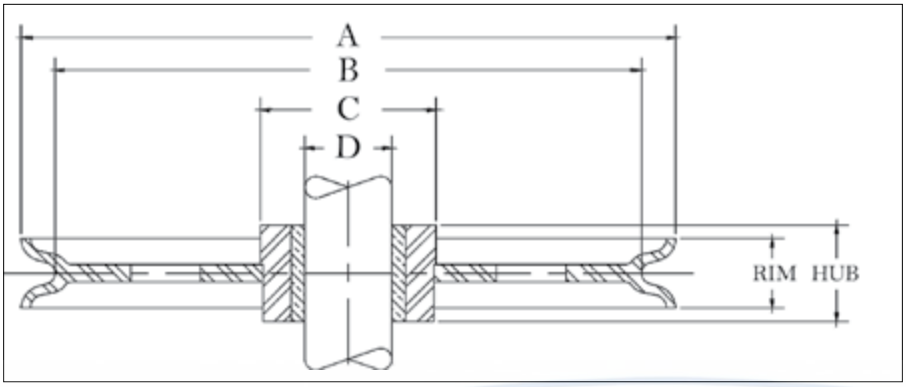

APPLICATION AND WARNING INFORMATION
SECTION 17

McKissick® Bronze Bushed Sheaves

- Roll-Forged sheaves are available in sizes up to 1981mm diameter.
- McKissick® Bronze Bushed Sheaves are equipped with S.A.E. 660 Bronze Bushings for cold finished shafts with "Figure 8" oil groove, or self-lubricating Bronze as designated by an asterisk (*) next to the shaft size.
- For sizes not listed, McKissick® Finished Bore Sheaves can be equipped with bronze bushings at an optional charge.
- Bronze Bushed Sheaves are designed to operate on shafts machined to +.000/-.002 in of the indicated shaft size.

"A" Nominal Outside Diameter (mm)	Stock Number	Wire Rope Diameter (mm)	"D" Shaft Size (mm)	Hub Width (mm)	Rim Width (mm)	"C" Nominal Hub Outside Diameter (mm)	"B" Nominal Tread Diameter (mm)	Material	Approx. Weight (kg)
57.0	907004	6	9.55*	15.9	14.3	19.1	47.6	B.S.	.34
76.0	907077	5	12.7*	19.8	19.1	25.4	60.5	P.M.	.45
76.0	907095	5	15.9*	19.8	19.1	25.4	60.5	P.M.	.45
76.0	907022	6	9.55*	12.7	12.7	25.4	66.5	P.M.	.34
76.0	907040	6	12.7*	12.7	12.7	25.4	66.5	P.M.	.34
76.0	907086	10	12.7*	19.1	19.1	25.4	60.5	P.M.	.45
76.0	916110	10	12.7*	19.8	19.1	38.1	60.5	B.S.	.45
76.0	460156	10	12.7	33.3	30.0	28.6	52.5	B.S.	.45
76.0	907102	10	15.9*	19.1	19.1	25.4	60.5	P.M.	.45
76.0	2030895	10	19.1	25.4	22.2	44.5	57.0	P.M.	.68
102	460290	3	25.4	25.4	22.2	51.0	79.5	B.S.	.91
102	907111	5	12.7*	19.1	15.9	34.9	89.0	P.M.	.45
102	907139	5	15.9*	19.1	15.9	34.9	89.0	P.M.	.45
102	916147	6	12.7*	20.6	19.1	51.0	82.5	B.S.	.68
102	916165	6	19.1*	20.6	19.1	51.0	82.5	B.S.	.68
102	460307	6	25.4	25.4	22.2	51.0	79.5	B.S.	.91
102	907120	8	12.7*	19.1	15.9	34.9	89.0	P.M.	.45
102	907148	8	15.9*	19.1	15.9	34.9	89.0	P.M.	.45
102	907166	10	12.7*	20.6	19.1	38.1	82.5	P.M.	.57
102	916156	10	12.7*	20.6	19.1	51.0	82.5	B.S.	.68
102	907184	10	15.9*	20.6	19.1	38.1	82.5	P.M.	.64
102	907200	10	19.1*	20.6	19.1	38.1	82.5	P.M.	.57
102	460316	10	25.4	25.4	22.2	51.0	79.5	B.S.	.91
102	907228	13	12.7*	27.0	25.4	41.3	81.0	P.M.	.68
102	907246	13	15.9*	27.0	25.4	41.3	81.0	P.M.	.68
102	907264	13	19.1*	27.0	25.4	41.3	81.0	P.M.	.68
105	2023186	10	25.4	38.1	34.9	51.0	76.0	F.S.	1.59
105	2023188	16	25.4	38.1	34.9	51.0	76.0	F.S.	1.59
108	460441	13	15.9*	30.2	23.8	54.0	85.5	B.S.	1.09
124	460478	10	31.8	31.8	28.6	57.0	103	F.S.	1.63
124	460469	16	31.8	31.8	28.6	57.0	103	F.S.	1.63
127	907273	5	15.9*	23.8	22.2	57.0	108	P.M.	1.02
127	460511	8	19.1	25.4	22.2	38.1	102	F.S.	1.13
127	907282	10	15.9*	23.8	22.2	57.0	108	P.M.	1.02
127	907308	10	19.1*	23.8	22.2	57.0	108	P.M.	1.02
127	460520	10	19.1	25.4	22.2	38.1	102	F.S.	1.13
127	907344	13	19.1*	30.2	25.4	57.0	102	P.M.	1.13
133	460637	19	25.4	38.1	34.9	52.5	98.5	F.S.	1.81
149	2023129	16	38.1	44.5	41.3	63.5	111	F.S.	2.72
149	2023137	19	38.1	44.5	41.3	63.5	111	F.S.	2.72
152	907424	10	12.7*	20.6	19.1	47.6	127	P.M.	1.13
152	907488	10	12.7*	27.0	25.4	47.6	127	P.M.	1.13
152	907442	10	15.9*	20.6	19.1	47.6	127	P.M.	1.13
152	907503	10	15.9*	27.0	25.4	47.6	127	P.M.	1.13
152	907460	10	19.1*	20.6	19.1	47.6	127	P.M.	1.13
152	907521	10	19.1*	27.0	25.4	47.6	127	P.M.	1.13
152	2026483	10	19.1*	27.0	25.4	51.0	130	F.S.	1.81

Custom sheaves are available.

Copyright © 2023 The Crosby Group LLC All Rights Reserved

McKISSICK®

McKissick® Bronze Bushed Sheaves

"A" Nominal Outside Diameter (mm)	Stock Number	Wire Rope Diameter (mm)	"D" Shaft Size (mm)	Hub Width (mm)	Rim Width (mm)	"C" Nominal Hub Outside Diameter (mm)	"B" Nominal Tread Diameter (mm)	Material	Approx. Weight (kg)
152	916245	10	22.2*	27.0	25.4	51.0	130	F.S.	1.81
152	2028641	10	25.4*	27.0	25.4	51.0	130	F.S.	1.81
152	460682	10	31.8	28.4	25.4	57.0	125	F.S.	1.68
152	907549	13	15.9*	30.2	28.6	47.6	124	P.M.	2.27
152	907567	13	19.1*	30.2	28.6	47.6	124	P.M.	2.14
152	913024	13	22.2*	27.0	25.4	47.6	124	P.M.	1.70
152	460879	13	25.4	38.1	31.8	79.5	121	B.S.	3.18
152	460673	13	31.8*	28.6	25.4	57.0	125	F.S.	1.81
152	2028048	13	25.4*	27.0	25.4	47.6	124	P.M.	4.31
152	2026938	16	19.1*	27.0	25.4	51.0	130	F.S.	3.18
152	913060	16	19.1*	33.3	31.8	47.6	121	P.M.	1.81
152	913088	16	22.2	33.3	31.8	47.6	121	P.M.	1.70
152	2026822	16	25.4*	27.0	25.4	51.0	130	F.S.	1.81
152	913104	16	25.4*	33.3	31.8	47.6	121	P.M.	1.70
152	2023264	16	51.0	58.5	55.5	79.5	108	F.S.	4.31
152	460897	19	25.4	38.1	31.8	79.5	121	B.S.	3.18
152	913168	19	25.4	39.7	38.1	76.0	117	P.M.	3.06
152	2023260	19	51.0	58.5	55.5	79.5	108	F.S.	4.31
152	2023262	22	51.0	58.5	55.5	79.5	108	F.S.	4.31
171	907692	6	19.1*	30.2	28.6	51.0	149	D.I.	2.27
171	907718	6	25.4*	30.2	28.6	51.0	149	D.I.	2.27
171	907709	10	19.1*	30.2	28.6	51.0	149	D.I.	2.27
171	907727	10	25.4*	30.2	28.6	51.0	149	D.I.	2.27
178	461020	6	38.1	34.9	19.1	60.5	159	B.S.	2.81
178	461039	10	38.1	34.9	19.1	60.5	159	B.S.	2.81
178	907629	13	19.1*	27.0	25.4	51.0	143	D.I.	1.93
191	460986	16	25.4	38.1	34.9	52.5	160	F.S.	3.40
191	460977	19	25.4	38.1	34.9	52.5	160	F.S.	3.40
194	461262	10	25.4	38.1	31.8	60.5	157	D.I.	3.18
194	461280	13	25.4	38.1	31.8	60.5	157	D.I.	3.18
194	461271	16	25.4	38.1	31.8	60.5	157	D.I.	3.18
203	907745	13	19.1*	28.6	25.4	60.5	175	D.I.	2.27
203	916487	13	19.1*	34.9	31.8	51.0	168	F.S.	3.18
203	907763	13	22.2*	28.6	25.4	60.5	175	D.I.	2.27
203	907781	13	25.4*	28.6	25.4	60.5	175	D.I.	2.27
203	916520	13	25.4*	34.9	31.8	51.0	168	F.S.	3.18
203	2026841	13	28.6*	34.9	31.8	51.0	168	F.S.	3.18
203	2026844	13	31.8*	34.9	31.8	51.0	168	F.S.	3.18
203	461235	13	38.1	38.1	34.9	62.0	168	F.S.	3.18
203	2023145	13	38.1	44.5	41.3	65.0	160	F.S.	4.54
203	907807	16	19.1*	34.9	31.8	51.0	165	D.I.	3.06
203	913300	16	22.2*	34.9	31.8	51.0	165	D.I.	3.06
203	913328	16	25.4*	34.9	31.8	63.5	168	D.I.	3.86
203	913364	16	31.8*	34.9	31.8	63.5	168	D.I.	3.86
203	913382	16	38.1*	34.9	31.8	63.5	168	D.I.	3.86
203	461244	16	38.1	38.1	34.9	62.0	168	F.S.	3.18
203	2023147	16	38.1	44.5	41.3	65.0	160	F.S.	4.54
203	461253	19	38.1	38.1	34.9	62.0	168	F.S.	3.18
203	2023153	19	38.1	44.5	41.3	65.0	160	F.S.	4.54
203	2028227	19	51.0	58.5	54.0	82.5	156	F.S.	5.67
203	461397	19	70.0	58.5	55.5	95.5	152	B.S.	4.76
203	2023386	22	51.0	58.5	54.0	82.5	156	F.S.	5.67
203	2023467	26	57.0	63.5	60.3	114	137	F.S.	8.16
203	2023463	28	57.0	63.5	60.3	114	137	F.S.	8.16
251	462831	10	63.5	44.5	28.6	95.0	217	F.S.	6.35
251	462154	13	25.4*	38.1	34.9	82.5	216	F.S.	4.31
251	2023166	13	38.1	44.5	41.3	65.0	211	F.S.	6.58
251	462840	13	63.5	44.5	28.6	95.5	217	F.S.	6.35
251	2023170	16	38.1	44.5	41.3	65.0	211	F.S.	6.58
251	2023174	19	38.1	44.5	41.3	65.0	211	F.S.	6.58
251	2023420	22	51.0	58.5	55.5	89.0	206	F.S.	6.80
251	2023428	25	51.0	58.5	55.5	89.0	206	F.S.	6.80
254	907923	13	22.2*	28.6	25.4	73.0	222	D.I.	4.54
254	907941	13	25.4*	28.6	25.4	73.0	222	D.I.	5.35
254	907969	16	19.1*	34.9	31.8	51.0	216	D.I.	4.20
254	908003	16	25.4*	34.9	31.8	51.0	216	D.I.	4.20
254	916726	16	25.4*	34.9	31.8	70.0	216	F.S.	6.35
254	2027291	16	31.8*	34.9	31.8	70.0	216	F.S.	6.35
254	913765	16	38.1*	34.9	31.8	76.0	216	D.I.	5.72
254	913863	19	38.1*	41.3	38.1	89.0	210	F.S.	7.26

Custom sheaves are available.

Copyright © 2023 The Crosby Group LLC All Rights Reserved

McKissick® Bronze Bushed Sheaves

"A" Nominal Outside Diameter (mm)	Stock Number	Wire Rope Diameter (mm)	"D" Shaft Size (mm)	Hub Width (mm)	Rim Width (mm)	"C" Nominal Hub Outside Diameter (mm)	"B" Nominal Tread Diameter (mm)	Material	Approx. Weight (kg)
254	913845	19	31.8*	41.3	38.1	89.0	210	F.S.	7.26
254	916833	19	38.1*	41.3	38.1	82.5	197	F.S.	7.71
254	913807	19	25.4*	41.3	38.1	89.0	210	F.S.	7.26
254	2026861	28	57.0	63.5	60.5	114	187	F.S.	12.3
254	2023785	28	89.0	63.5	60.5	146	187	F.S.	12.7
302	462323	10	63.5	58.7	25.4	95.5	273	D.I.	5.08
305	908049	13	25.4*	28.6	25.4	102	270	D.I.	7.48
305	908085	13	31.8*	28.6	25.4	102	270	D.I.	7.48
305	917011	16	28.6*	41.3	38.1	82.5	257	F.S.	8.16
305	2023227	16	38.1	44.5	41.3	82.5	260	F.S.	9.98
305	462387	16	51.0*	58.5	55.5	114	257	R.F.	11.8
305	462564	16	63.5	44.5	41.3	114	271	R.F.	10.9
305	908129	19	25.4*	41.3	38.1	70.0	260	D.I.	8.28
305	914149	19	31.8	41.3	38.1	133	260	D.I.	11.6
305	914167	19	38.1	41.3	38.1	133	260	D.I.	11.6
305	2023235	19	38.1	44.5	41.3	82.5	238	F.S.	9.98
305	462449	19	51.0	58.5	55.5	114	248	R.F.	11.8
305	346593	19	57.0	58.5	55.5	114	248	R.F.	11.8
305	462573	19	63.5	44.5	41.3	114	238	R.F.	10.9
305	4104882	19	63.5	44.5	41.3	114	248	R.F.	11.3
305	4104917	19	63.5*	58.5	55.5	114	248	R.F.	11.3
305	462485	19	76.0*	76.0	47.6	140	238	R.F.	9.53
305	908245	22	38.1	51.0	44.5	95.5	254	D.I.	9.19
305	462458	22	51.0	58.5	55.5	114	260	R.F.	11.8
305	2023554	22	57.0	63.5	60.5	114	238	R.F.	12.7
305	4104891	22	63.5	44.5	41.3	114	260	R.F.	11.3
305	462467	25	51.0	58.5	55.5	102	254	R.F.	11.8
330	462779	10	51.0	38.1	28.6	89.0	295	R.F.	6.35
330	462788	13	51.0	38.1	28.6	89.0	295	R.F.	6.35
356	**463518	13	95.5*	63.5	34.9	114	321	R.F.	6.8
356	463625	16	38.1	44.5	41.3	89.0	308	R.F.	9.07
356	4103552	16	51.0*	44.5	41.3	129	308	R.F.	13.2
356	**908281	19	28.6*	41.3	36.3	114	311	C.I.	12
356	**908307	19	31.8*	41.3	38.1	82.5	311	C.I.	12
356	917173	19	31.8	41.3	38.1	82.5	305	R.F.	12.0
356	917191	19	38.1	41.3	38.1	102	298	R.F.	12.0
356	463634	19	38.1	44.5	41.3	82.5	289	R.F.	9.07
356	4103632	19	51.0*	44.5	41.3	82.5	298	R.F.	13.6
356	4104828	19	70.0*	58.5	55.5	114	298	R.F.	15.9
356	4103641	22	51.0	44.5	41.3	114	311	R.F.	14.1
356	463466	28	57.0	63.5	60.5	114	289	R.F.	12.7
406	4101395	13	89.0	70.0	63.5	146	362	R.F.	24.5
406	4100047	19	89.0	70.0	63.5	146	340	R.F.	21.3
406	4100109	19	95.5	70.0	63.5	146	340	R.F.	19.1
406	4103703	22	63.5*	58.5	55.5	114	329	R.F.	15.9
406	4105211	22	70.0*	58.5	55.5	114	329	R.F.	19.1
406	917360	25	38.1*	51.0	44.5	108	337	R.F.	15.4
406	4100127	25	95.5	70.0	63.5	146	337	R.F.	28.6
457	4105131	22	76.0*	58.5	55.5	140	379	R.F.	23.6
457	917486	26	51.0*	51.0	47.6	114	378	R.F.	25.0
457	4104052	26	70.0	58.5	55.5	140	378	R.F.	29.9
457	4105140	26	76.0	58.5	55.5	140	378	R.F.	23.6
508	4100341	19	76.0	58.5	55.5	140	457	R.F.	30.8
508	4105239	19	95.5	70.0	54.0	165	457	R.F.	30.8
508	4100350	22	76.0	58.5	55.5	140	435	R.F.	20.4
508	4100369	26	76.0	58.5	55.5	140	435	R.F.	36.4
508	4105257	26	95.5	70.0	54.0	165	419	R.F.	30.8
508	4105275	26	140	73.0	66.5	203	435	R.F.	30.8
610	4105355	22	146	85.5	79.5	203	533	R.F.	60.3
610	4105382	26	140	73.0	66.5	203	537	R.F.	59.0
610	4100868	28	102	76.0	70.0	165	510	R.F.	49.9
610	4105391	28	140	73.0	66.5	203	510	R.F.	60.8
610	4105373	28	146	85.5	79.5	203	510	R.F.	62.1
762	4105426	22	146	85.5	79.5	203	686	R.F.	92.1
762	4105435	26	146	85.5	79.5	203	686	R.F.	92.1
762	4105444	28	146	85.5	79.5	203	686	R.F.	92.1
762	4105462	28	178	89.0	79.5	241	670	R.F.	95.7
762	4105471	28	178	89.0	79.5	241	670	R.F.	95.7

* * Without Flame Harden groove.

Material: B.S.=Bar Steel, C.I.=Cast Iron, F.S.=Forged Steel, D.I.=Ductile Iron, C.S.=Cast Steel, P.M.=Powdered Metal, R.F.=Roll-Forged.

Custom sheaves are available.

Copyright © 2023 The Crosby Group LLC All Rights Reserved

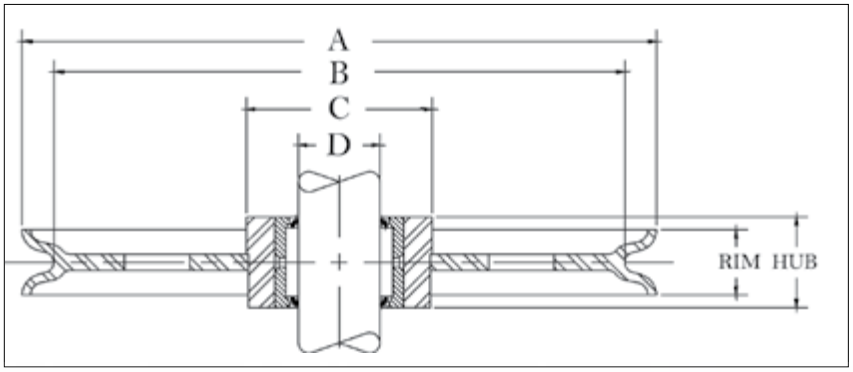

APPLICATION AND WARNING INFORMATION
SECTION 17

McKissick® Roller Bearing Sheaves

- Roll-Forged sheaves are available in sizes up to 1981mm diameter.
- McKissick® Roller Bearing Sheaves are designed to operate on shafts carborized to 60 Rockwell C and grind to -.003/-.004 of the indicated shaft size. Some sizes are available with an optional inner race. Check with Crosby Sales for prices and correct shaft size.
- Application should provide for79mm running clearance over the hub width.
- For sizes not listed, McKissick® Finished Bore Sheaves can be equipped with Roller Bearings at an optional charge.

"A" Nominal Outside Diameter (mm)	Stock Number	Wire Rope Diameter (mm)	"D" Shaft Size (mm)	Hub Width (mm)	Rim Width (mm)	"C" Nominal Hub Outside Diameter (mm)	"B" Nominal Tread Diameter (mm)	Material	Approx. Weight (kg)
102	472508	3	25.3	25.4	22.2	51.0	79.5	B.S.	.91
102	472517	6	25.3	25.4	22.2	51.0	79.5	B.S.	.91
102	472535	10	25.3	25.4	22.2	51.0	79.5	B.S.	.91
102	2028063	13	25.3	38.1	34.9	51.0	76.0	F.S.	1.59
102	2025891	16	25.3	38.1	34.9	51.0	76.0	F.S.	1.59
124	472768	10	31.7	31.8	28.6	57.0	103	F.S.	1.63
124	472777	13	31.7	31.8	28.6	57.0	103	F.S.	1.63
124	472786	16	31.7	31.8	28.6	57.0	103	F.S.	1.63
133	2026427	16	25.3	38.1	34.9	52.5	98.5	F.S.	1.81
133	2026423	19	25.3	38.1	34.9	52.5	98.5	F.S.	1.81
149	2023141	16	38.0	44.5	41.3	63.5	111	F.S.	2.72
149	2023143	19	38.0	44.5	41.3	63.5	111	F.S.	2.72
152	472875	13	50.5	44.5	31.8	79.5	121	F.S.	3.18
191	2025892	19	25.3	38.1	34.9	52.5	160	F.S.	3.40
194	473311	10	25.3	38.1	31.8	50.5	157	D.I.	3.18
194	473320	13	25.3	38.1	31.8	60.5	157	D.I.	3.18
194	473339	16	25.3	38.1	31.8	60.5	157	D.I.	3.18
203	2023155	13	38.0	44.5	41.3	65.0	160	F.S.	4.54
203	2023159	16	38.0	44.5	41.3	65.0	160	F.S.	4.54
203	2023163	19	38.0	44.5	41.3	65.0	160	F.S.	4.54
203	2023404	19	50.5	58.5	54.0	82.5	156	F.S.	5.67
251	2026433	13	38.0	44.5	41.3	65.0	211	F.S.	6.58
251	2023179	16	38.0	44.5	41.3	65.0	211	F.S.	6.58
251	2023181	19	38.0	44.5	41.3	65.0	211	F.S.	6.58
251	2023436	19	50.5	58.5	55.6	89.0	206	F.S.	6.80
305	2023248	16	38.0	44.5	41.3	82.5	257	F.S.	8.16
305	474365	16	57.0	44.5	41.3	114	257	R.F.	7.26
305	2023236	19	38.0	44.5	41.3	82.5	248	F.S.	8.16
305	474374	19	57.0	44.5	41.3	114	248	R.F.	7.26
356	2026445	16	38.0	44.5	41.3	82.5	305	R.F.	9.07
356	4200563	16	50.5	44.5	41.3	114	308	R.F.	14.1
356	4200572	19	50.5	44.5	41.3	114	298	R.F.	14.1
356	474784	22	38.0	44.5	41.3	82.5	311	R.F.	9.07
406	4200705	22	63.5	58.5	55.5	114	329	R.F.	21.7
457	4201438	22	70.0	58.5	55.5	140	379	R.F.	19.4
457	4200867	25	70.0	58.5	55.5	140	378	R.F.	29.9

* Without flame harden groove
Material: B.S.=Bar Steel, C.I.=Cast Iron, F.S.=Forged Steel, D.I.=Ductile Iron, C.S.=Cast Steel, P.M.=Powdered Metal, R.F.=Roll-Forged.

Custom sheaves are available.

Copyright © 2023 The Crosby Group LLC All Rights Reserved

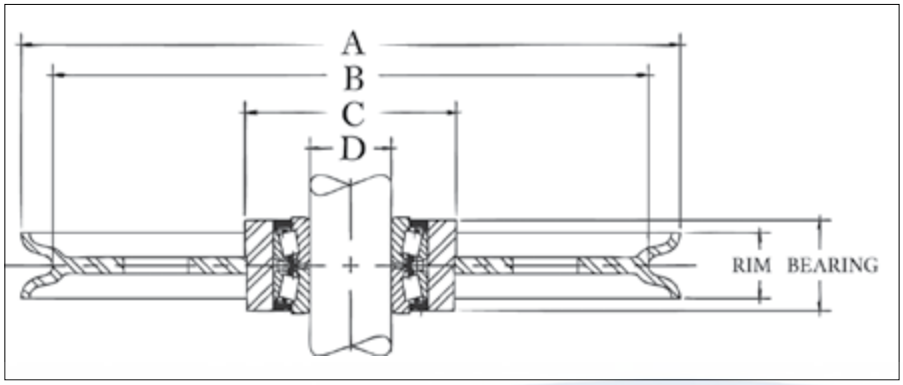

APPLICATION AND WARNING INFORMATION
SECTION 17

McKissick® Tapered Bearing Sheaves

- Roll-Forged sheaves are available in sizes up to 1981mm diameter.
- Tapered Bearing Sheaves are designed to operate on shafts machined to, and no bearing or bushing is installed.
- Applications should provide for tightening separator plates against bearing cones to adjust and insure proper function of bearing.

"A" Nominal Outside Diameter (mm)	Stock Number	Wire Rope Diameter (mm)	"D" Shaft Size (mm)	Bearing Width (mm)	Rim Width (mm)	"C" Nominal Hub Outside Diameter (mm)	"B" Nominal Tread Diameter (mm)	Material	Approx. Weight (kg)
124	480269	10	19.0	1.375	28.6	57.0	103	F.S.	1.63
178	480777	6	19.0	1.375	19.1	60.5	159	B.S.	4.08
203	481017	13	19.0	1.375	31.8	62.0	168	F.S.	3.18
216	481044	10	19.0	1.375	25.4	70.0	191	D.I.	3.40
305	481455	19	38.1	2.313	55.5	114	248	R.F.	10.9
305	481446	22	38.1	2.313	55.5	114	260	R.F.	10.9
406	4302793	13	51.0	2.938	63.5	146	362	R.F.	22.7
406	4300599	19	51.0	2.938	63.5	146	340	R.F.	24.9
406	4300018	22	38.1	2.313	55.5	114	329	R.F.	16.8
406	4300054	26	51.0	2.938	63.5	146	340	R.F.	19.1
457	4300081	19	51.0	2.938	55.5	165	406	R.F.	18.1
508	4300161	19	51.0	2.938	54.0	165	457	R.F.	39.5
508	4300189	26	51.0	2.938	54.0	165	419	R.F.	38.1
610	*4302720	16	70.0	2.938	38.1	165	552	R.F.	62
610	4300312	22	108	3.500	79.5	203	530	R.F.	57.0
610	4300321	26	108	3.500	79.5	194	537	R.F.	57.0
610	4300401	28	70.0	2.938	70.0	165	510	R.F.	36.0
610	4300330	28	108	3.500	79.5	203	510	R.F.	57.0
762	4300483	22	108	3.500	79.5	203	686	R.F.	64.0
762	4300492	26	108	3.500	79.5	194	686	R.F.	95.0
762	4300526	26	143	3.688	79.5	241	686	R.F.	86.0
762	4300508	28	108	3.500	79.5	203	686	R.F.	64.0
762	4300704	32	143	3.688	79.5	241	670	R.F.	64.0

Custom sheaves are available.

Copyright © 2023 The Crosby Group LLC All Rights Reserved

McKISSICK®

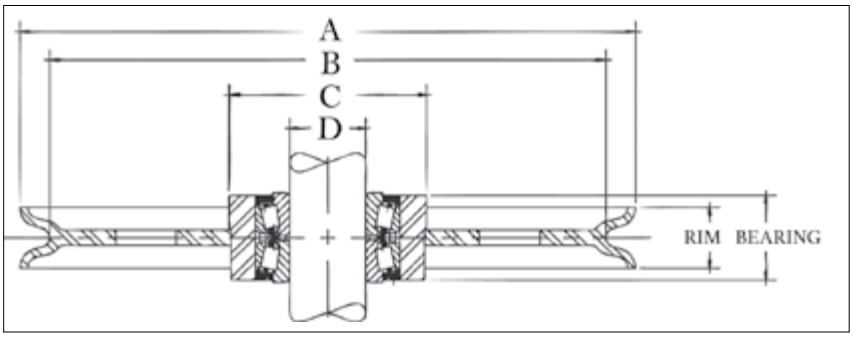

APPLICATION AND WARNING INFORMATION
SECTION 17

McKissick® Plain Bore Oilfield Sheaves for Tapered Bearings

- Roll-Forged sheaves are available in sizes up to 1981mm diameter.
- Applications should provide for tightening separator plates against bearing cones to adjust and insure proper function of bearing.
- Each sheave in the table below has a machined bore sized to accept the respective bearing number shown.
- The sheaves are provided from the factory plain bore (the bearings are not included).

"A" Nominal Outside Diameter (mm)	Stock Number	Wire Rope Diameter (mm)	Bore Information "D" Bore Diameter (mm)	Bore Information Bearing Info. (Bearing not Included) Shaft Diameter (mm)	Bore Information Bearing Info. (Bearing not Included) Bearing Description	Bearing Width (mm)	Rim Width (mm)	"C" Nominal Hub Outside Diameter (mm)	"B" Tread Diameter (mm)	Material	Approx. Weight (kg)
508	2030311	14	120	70	NA-483-SW-472-D	2.750	70.0	165	448	R.F.	36.3
508	2029285	16	120	70	NA-483-SW-472-D	2.750	70.0	165	452	R.F.	34.0
610	2030941	14	165	108	NA56425-SW-56650D	3.375	79.4	203	549	R.F.	46.7
610	2030905	16	165	108	NA56425-SW-56650D	3.375	76.2	203	559	R.F.	53.1
610	2027885	14	165	108	NA56425-SW-56650D	3.375	79.4	203	549	R.F.	40.8
610	2027887	16	165	108	NA56425-SW-56650D	3.375	69.9	229	559	R.F.	36.3
610	2027880	22	165	108	NA56425-SW-56650D	3.375	79.4	216	532	R.F.	56.7
610	2023993	26	165	108	NA56425-SW-56650D	3.375	79.4	229	536	R.F.	49.9
762	2026299	26	165	108	NA56425-SW-56650D	3.375	79.4	260	673	R.F.	86.2
762	2026036	28	165	108	NA56425-SW-56650D	3.375	79.4	260	662	R.F.	104
762	2026230	26	200	143	NA48685-SW/48620	3.500	79.4	260	573	R.F.	116
762	2026003	28	200	143	NA48685-SW/48620	3.500	79.4	305	662	R.F.	116
762	2030906	26	225	165	NA46790-SW-46720	3.625	85.7	229	673	R.F.	83.9
762	2030907	28	225	165	NA46790-SW-46720	3.625	85.7	229	662	R.F.	120
762	2027941	26	165	108	NA56425-SW-56650D	3.375	79.4	260	673	R.F.	68.0
762	2027945	28	165	108	NA56425-SW-56650D	3.375	79.4	260	662	R.F.	90.7
762	2030274	26	200	143	NA48685-SW/48620	3.500	79.4	260	673	R.F.	73.0
762	2030260	28	200	143	NA48685-SW/48620	3.500	79.4	260	662	R.F.	98.9
917	2030942	26	200	143	NA48685-SW/48620	3.500	82.6	292	841	R.F.	159
917	2030908	28	200	143	NA48685-SW/48620	3.500	82.6	279	854	R.F.	159
917	2030943	26	225	165	NA46790-SW-46720	3.625	79.4	356	841	R.F.	160
917	2029390	28	225	165	NA46790-SW-46720	3.625	82.6	356	854	R.F.	136
917	2029392	32	225	165	NA46790-SW-46720	3.625	82.6	356	819	R.F.	136
917	2030944	26	276	203	LM241149NW/241110-D	3.625	79.4	260	841	R.F.	168
917	2030909	28	276	203	LM241149NW/241110-D	3.625	88.9	260	814	R.F.	162
917	2030945	32	276	203	LM241149NW/241110-D	3.625	85.7	305	819	R.F.	150
917	2030282	26	200	143	NA48685-SW/48620	3.500	82.6	292	841	R.F.	109
917	2030284	28	200	143	NA48685-SW/48620	3.500	82.6	356	829	R.F.	113
1067	2030946	28	225	165	NA46790-SW-46720	3.625	82.6	356	981	R.F.	209
1067	2030947	32	225	165	NA46790-SW-46720	3.625	82.6	406	972	R.F.	213
1067	2030948	28	276	203	LM241149NW/241110-D	3.625	82.6	406	981	R.F.	211
1067	2030949	22	276	203	LM241149NW/241110-D	3.625	82.6	356	972	R.F.	209
1067	2030950	28	327	235	NA8575SW-8520CD	4.500	88.9	356	981	R.F.	211
1067	2030951	32	327	235	NA8575SW-8520CD	4.500	85.7	356	972	R.F.	215
1118	2030952	28	276	203	LM241149NW/241110-D	3.625	85.7	356	1018	R.F.	279
1118	2030953	32	276	203	LM241149NW/241110-D	3.625	76.2	432	1022	R.F.	247
1219	2030954	28	276	203	LM241149NW/241110-D	3.625	82.6	356	1133	R.F.	263
1219	2030955	32	276	203	LM241149NW/241110-D	3.625	69.9	432	1124	R.F.	232
1219	2030956	32	348	251	LM249747NWLM249710D	3.875	82.6	432	1124	R.F.	290
1270	2030938	28	276	203	LM241149NW/241110-D	3.625	85.7	406	1175	R.F.	347
1270	2030957	28	276	251	LM241149NW/241110-D	3.875	82.6	406	1175	R.F.	347
1270	2030958	35	348	251	LM249747NW/LM249710D	3.875	95.3	483	1159	R.F.	333
1397	2030959	28	327	235	NA8575SW-8520CD	4.500	88.9	432	1297	R.F.	404
1397	2030960	32	327	235	NA8575SW-8520CD	4.500	85.7	483	1302	R.F.	374
1397	2030961	32	348	251	LM249747NW/LM249710D	3.875	88.9	483	1302	R.F.	267
1524	2030879	32	348	251	LM249747NW/LM249710D	3.875	82.6	483	1429	R.F.	497
1524	2030880	35	352	267	LM251649NW/251610-D	4.125	92.1	483	1419	R.F.	533
1524	2030881	35	394	305	L357049NW/L357010D	4.125	95.3	483	1419	R.F.	533
1524	2030875	38	348	251	LM249747NW/LM249710D	3.875	88.9	483	1410	R.F.	533

**Crown Sheaves contain lightening holes.

Custom sheaves are available.

Copyright © 2023 The Crosby Group LLC All Rights Reserved

BLOCKS

Wide range of blocks and overhaul balls, all made in the USA.

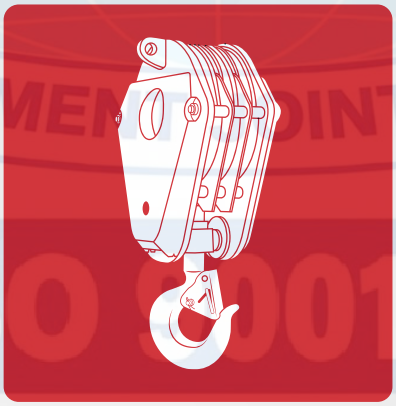

CÔNG TY CỔ PHẦN PHÁT TRIỂN KINH TẾ ĐÔNG NAM Á
ASEAN JSC.VN
ASEAN DEVELOPMENT JOINT STOCK COMPANY
ISO 9001:2015
Since 2006

thecrosbygroup.com

IMPROVE SAFETY & PRODUCTIVITY ON YOUR NEXT LIFT

Wireless cameras & audio-visual warning systems designed specifically for crane blocks & boom tips

- Reduce hazards
- Avoid impacts & collisions
- Confirm load security
- Optimize lifting times
- Improve job site communication
- Return on the bottom line

CÔNG TY CỔ PHẦN PHÁT TRIỂN KINH TẾ ĐÔNG NAM Á
ASEAN JSC.VN
ASEAN DEVELOPMENT JOINT STOCK COMPANY
ISO 9001:2015
since 2006

Now available from The Crosby Group:

Unobstructed view of load and surrounding area below

BlokCam X2

BlokCam M3

BlokAlert

Crosby® | BLOKCAM

See section 2 of this catalog and visit **thecrosbygroup.com/blokcam** for more information.

IMPORTANT CONSIDERATIONS

Some of the most important considerations in your block requirements are:

Available bearing types

Bronze Bushed
SAE 660 bronze with
figure 8 oil groove

Double Row Sealed
Tapered Roller Bearing

Straight Roller
Bearing

Full Complement
Cylindrical Roller Bearing

The sheave

In the image on the right, note the groove form with proper line support and gently rounded lips to prevent line chafing when fleet angles are present.

The sheave cross-section is machined in the image to the right, and the dense martensitic structure is clearly outlined by the etching.

This flame-hardened surface in the wear area of the sheave always presents a smooth, uncorrugated, proper size groove – face to the line. Sheaves 356 mm (14in) diameter and larger are flame hardened in groove to minimum 35 Rockwell C.

Smaller sheaves can be flame hardened on special order.

Unretouched photograph
of a section cut from a flame-
hardened McKissick sheave
(etched 2-1/2 minutes)

Additional connections

All crane and construction blocks casn be furnished with:

Swivel shackle in selected
capacities with bronze thrust
or roller thrust bearing

Single hook in capacities to
300 metric tons

Duplex swivel hook in standard
capacities up to 1,000 metric tons
(larger sizes available)

Quad swivel hook from 200
Metric tons and larger

ORDERING INSTRUCTIONS

The following information should be specified when ordering blocks and sheaves:

Blocks

- Wire rope diameter
- Working Load Limit
- Number of sheaves
- Minimum overhaul weight
- Sheave diameter
- Hook or shackle fittings
- Type of bearing: bronze bushed (BB), roller (RB), tapered roller (TB)

All crane and some construction blocks are available as shown or with swivel shackle assembly, duplex swivel hook assembly, or quadruple hook assembly. Various combinations of bearing assemblies can be furnished, such as bronze bushed sheaves and swivel hooks, roller or tapered roller bearing sheaves and hook assemblies, or a combination of bronze, roller, or tapered roller bearings.

Sheaves

- Wire rope diameter
- Sheave OD
- Shaft or bore size
- Bearing type or blain bore
- Hub width & rim width
- Stock number (if known)
- Special machine features
- Special finishes

If hub or rim dimensions necessitate a dimension other than those shown in this catalog, please contact The Crosby Group for minimums and maximums. Tapered roller bearing sheaves show width over bearing cones, which cannot be altered. Price and delivery for your special needs, if not shown, are available upon request.

Copyright © 2023 The Crosby Group LLC All Rights Reserved

380 Series Hook Blocks

380 Series Hook Blocks

- Wide range of products available:
  - 4.5t to 270t capacity
  - 254mm to 762mm sheave diameter
  - 11mm to 35mm wire rope diameter
  - Larger capacity blocks available
- All 380 Blocks are furnished standard with roller bearings.
- Reeving Guide Standard – all models.
- Blocks through 23 tonnes use 319N style hooks with S-4320 latches.
- Sheaves lubrication through center pin - separate lube channel to each bearing.
- Sheave fully protected by side plates.
- Dual action hook (swings and rotates).
- Repair parts available through worldwide distribution network.
- Design Factor of 4:1 (unless otherwise noted).
- All 380 blocks 406mm and larger are furnished with McKissick® roll-forged sheaves with flame-hardened grooves.
- Marked in short tons unless metric tag requested at time of order.
- Look for the orange hook...the mark of genuine McKissick® quality.

APPLICATION AND WARNING INFORMATION
SECTION 17

OPTIONS AVAILABLE

- Bronze Bushed Sheaves
- Duplex Hooks
- Swivel Tee and Shackle Assemblies
- Sheave Shrouds
- Anti Rotation Hook - Locking Device
- Plate Steel Cheek Weights
- Third party testing with Certification available upon request.

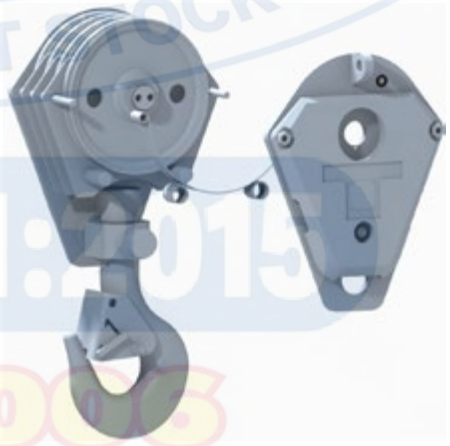

Minimized height, for maximum head-room. Traditional guards/guides facilitate reeving without a fitting.

The patented McKissick® Split-Nut® is the standard retention system for standard crane blocks up to 90 tonnes.

For standard & custom block orders contact our Block Hotline at 800-727-1555 or visit thecrosbygroup.com/engineeredsolutions for more information.

Copyright © 2023 The Crosby Group LLC All Rights Reserved

McKissick® Utility Crane Blocks

To see the legacy dimensional tables for McKissick® 380 Series Blocks, visit thecrosbygroup.com/tables

	SHV OD (mm)	Capacity in metric tons																												
		4.5	9.1	13.6	18.1	22.7	27.2	31.8	36.3	40.8	45.4	49.9	54.4	59.0	63.5	68.0	72.6	81.6	90.7	104.3	113.4	117.9	127.0	136.1	149.7	181.4	204.1	226.8	249.5	272.2
1 SHV	254	■	■	■																										
	305	■	■	■	■																									
	356		■	■	■	■																								
	406		■	■	■	■	■																							
	457				■	■	■	■																						
	508					■	■	■	■																					
	610				■	■	■	■	■	■	■	■																		
2 SHV	254	■	■	■	■																									
	305		■	■	■	■																								
	356		■	■	■	■	■																							
	406			■	■	■	■	■																						
	457					■	■	■	■																					
	508								■	■	■																			
	610										■	■	■	■	■	■	■													
3 SHV	254		■	■	■																									
	305			■	■	■	■																							
	356				■	■	■	■																						
	406					■	■	■	■	■																				
	457					■	■	■	■	■	■	■	■	■	■															
	508						■	■	■	■	■	■	■	■	■	■	■													
	610										■	■	■	■	■	■	■	■	■											
4 SHV	254			■	■	■	■																							
	305				■	■	■	■																						
	356					■	■	■	■	■																				
	406						■	■	■	■	■	■	■	■	■	■	■													
	457								■	■	■	■	■	■	■	■	■													
	508										■	■	■	■	■	■	■	■	■											
	610												■	■	■	■	■	■	■	■	■	■	■	■	■					
5 SHV	356							■	■		■	■																		
	406									■	■			■	■	■	■													
	457											■		■	■	■	■	■	■											
	508												■	■	■	■	■	■	■											
	610													■	■	■	■	■	■	■	■	■	■	■	■					
	762																									■	■			
6 SHV	356										■	■	■																	
	406													■	■	■	■													
	457												■	■	■	■	■	■	■	■	■	■	■							
	508													■	■	■	■	■	■	■	■	■	■	■	■					
	610													■	■	■	■	■	■	■	■	■	■	■	■	■	■			
	762																									■	■	■	■	■
7 SHV	610																											■	■	■
8 SHV	762																													■

Review the table above to see all standard configurations available. We have also engineered thousands of special crane blocks, so it is very likely that we have the ideal solution to your rigging application. Visit thecrosbygroup.com/engineeredsolutions to learn more.

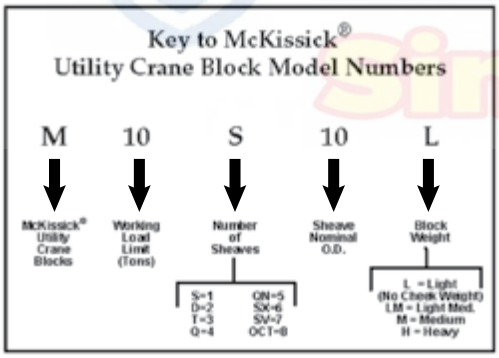

Table 1 - Standard Wireline Sizes For McKissick 380 Utility Crane Blocks										
Sheave Diameter (in)	Wireline Size (in)									
	7/16	1/2	9/16	5/8	3/4	7/8	1	1 1/8	1 1/4	1 3/8
10	■	■	■	■						
12		■	■	■	■					
14		■	■	■	■					
16			■	■	■	■				
18				■	■	■	■			
20					■	■	■	■		
24						■	■	■	■	■
30							■	■	■	■

*For additionnal Wireline sizes, please call Crosby's Special Engineered Poducts Group at 1(800)777-1555.

Copyright © 2023 The Crosby Group LLC All Rights Reserved

380 Series Easy Reeve® Hook Blocks

380 Series Easy Reeve® Hook Block

- Wide range of products available:
  - 4.5 to 73 tonnes capacity
  - 254 to 508mm sheave diameter
  - 11 to 32mm wire rope diameter
  - Larger capacity blocks available
- All single point shank hooks are genuine Crosby®, forged alloy steel, Quenched & Tempered, and have the patented QUIC-CHECK® markings (Duplex hooks are available on most sizes).
- Design factor of 4:1 (unless otherwise noted).
- All Easy Reeve® Blocks are furnished standard with roller bearings.
- Reeving Guides Standard – All Models.
- Blocks through 23 tonnes use 319N hooks with S-4320 latches.
- Heavy duty positive locking (PL) latch – Models: 27 tonnes and larger.
- Sheave lubrication through center pin - separate lube channel to each bearing.
- Sheaves fully protected by side plates.
- Dual action hook (swings and rotates).
- Repair parts available through worldwide distribution network.
- All Easy Reeve® blocks 406mm and larger are furnished with McKissick® Roll-Forged sheaves with flame hardened grooves.
- Manufactured by an ISO 9001 and API Q1 certified facility.
- Marked in short tons unless metric tag requested at time of order.
- "Look for the Orange Hook...the mark of genuine McKissick® quality".

APPLICATION AND WARNING INFORMATION
SECTION 17

Center "Dead End" to promote better block travel under various reeving configurations.

The patented McKissick® Split-Nut® is the standard retention system for standard crane blocks up to 90 tonnes.

Sheave Guards that open to allow block reeving without removing the rope end fitting.

Flat Bottom side plate for self standing during reeving process.

For standard & custom block orders contact our Block Hotline at: (800) 727-1555 or visit thecrosbygroup.com/engineeredsolutions for more information.

Copyright © 2023 The Crosby Group LLC All Rights Reserved

McKissick® Easy Reeve® Crane Blocks

To see the legacy dimensional tables for McKissick® 380 Series Easy Reeve® Blocks, visit thecrosbygroup.com/tables

	SHV OD (mm)	Capacity in metric tons															
		4.5	9.1	13.6	18.1	22.7	27.2	31.8	36.3	40.8	45.4	49.9	54.4	59.0	63.5	68.0	72.6
1 SHV	254	■	■	■	■												
	305			■													
	356		■	■	■												
	406		■	■		■											
	457				■	■	■										
	508						■	■									
	711																
	762																
2 SHV	254		■	■													
	305		■	■	■	■											
	356				■	■	■										
	406																
	457						■	■									
3 SHV	254		■	■													
	305		■	■	■	■											
	356				■	■	■	■	■	■							
	406						■	■	■	■							
	457								■	■	■	■					
	508												■	■	■	■	■
	762																
4 SHV	305				■	■											
	356		■	■	■	■	■	■	■								
	406								■	■	■	■					
	457												■	■	■	■	■
5 SHV	356																
	406										■	■					
	457												■	■	■	■	■
	508												■	■	■	■	■

Review the table above to see all standard configurations available. We have also engineered thousands of special crane blocks, so it is very likely that we have the ideal solution to your rigging application. Visit thecrosbygroup.com/engineeredsolutions to learn more.

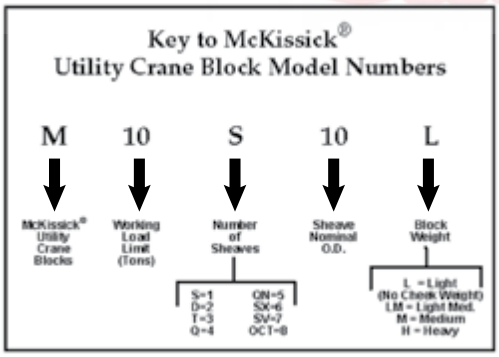

Table 1 - Standard Wireline Sizes For McKissick 380 Utility Crane Blocks

Sheave Diameter (in)	Wireline Size (in)									
	7/16	1/2	9/16	5/8	3/4	7/8	1	1 1/8	1 1/4	1 3/8
10	■	■	■	■						
12		■	■	■	■					
14		■	■	■	■					
16			■	■	■	■				
18				■	■	■	■			
20					■	■	■	■		
24						■	■	■	■	■
30							■	■	■	■

*For additionnal Wireline sizes, please call Crosby's Special Engineered Poducts Group at 1(800) 777-1555.

Copyright © 2023 The Crosby Group LLC All Rights Reserved

INNOVATIVE RETENTION SYSTEM MAKES INSPECTION EASIER

Crane block hook inspection in four easy steps:

STEP 1
Remove protective vinyl cover

STEP 2
Remove retaining ring

STEP 3
Slide keeper ring off split nuts

STEP 4
Easily remove split nut halves to inspect shank hook

McKissick® Split-Nut® Retention System

Shank hooks on crane blocks must be inspected in accordance with applicable crane standards. These standards mandate the crane hook to be inspected for surface indications, damage, and corrosion, which could compromise the integrity of the crane block.

Because of the type of environments in which these hooks are required to perform, the removal of corroded nuts from the threads can become a problem during inspections.

The innovative, patented* Split-Nut Retention System featured on McKissick crane blocks makes inspection easier. With four easy steps, the hook can be disassembled, inspected and put back into service in a fraction of the time of a conventional threaded nut.

The Split-Nut is standard equipment on McKissick Easy Reeve® crane blocks up to 90 tonnes.

- Allows for easy inspection, as required by ASME B30, CSA Z150, and other crane standards.
- Eliminates conventional threaded nut and problems associated with the nut removal for inspection.
- Allows repeated installation and removal without risk of damage to hook/nut interface.
- Zinc plated finish for corrosion resistance.
- Replacement hook and trunnion assemblies available for selected McKissick 380, or Easy Reeve & 790 blocks with threaded hooks.

The Split-Nut can be purchased in a variety of configurations that can be used to retrofit the following McKissick blocks in the field or in the shop:

- Over 90 tonnes and larger crane blocks (upon request)
- Bridge crane blocks
- 80 Series tubing blocks

In addition, the Split-Nut can be used to replace existing hooks on existing crane blocks currently in the field most manufacturers' makes and models) and on special designed lifting equipment.

McKISSICK®

* US Patent 7,000,905 & 7,293,763

API 2C SYSTEMS

Block systems for offshore pedestal-mounted cranes certified to API 2C are considered critical components. The Crosby Group provides McKissick blocks, overhaul balls, sheaves, button spelter sockets, and wedge sockets that meet the compound requirements of API 2C.

It is the responsibility of the crane manufacturer to license or certify these components.

MCKISSICK® BLOCKS

Material traceability, chemistry reports, tensile test reports, magnetic particle inspection per ASTM E-709 on the following components:

- Hook
- Hook Nut
- Trunnion
- Center Pin
- Side Plate
- Sheave (no MPI on sheave)
- Dead End

Charpy impact test reports per API 2C latest revision on the following components:

- Hook
- Hook Nut
- Trunnion
- Center Pin
- Side Plate
- Dead End

Sheave diameter based on D/d ratio based on pitch equal to a minimum of 18/1.
Weight plates produced from plate steel. Hook to rotate on thrust bearing with grease fitting.
Sheave bearing to be roller bearings with grease fitting. May be proof tested to 2x the rated Working Load Limit.

McKISSICK® OVERHAUL BALLS

Material traceability, chemistry, tensile test, magnetic particle inspection per ASTM E-709 on the following components:

- Swivel Eye
- Fixed Eye Nut
- Swivel Base Plug
- Case Pin
- Hook Pin
- Hook

Charpy impact test reports per API 2C latest revision on the following components:

- Swivel Eye
- Fixed Eye
- Swivel Eye Nut
- Swivel Base Plug
- Case Pin
- Hook Pin
- Hook

Eye to rotate on thrust bearing with grease fitting.
May be proof tested to 2x the rated Working Load Limit.

McKISSICK® WEDGE SOCKETS

421 & 422 up to 32mm

Material traceability, chemistry, tensile test, magnetic particle inspection per ASTM E-709 on the following components:

- Socket Body
- Pin

Charpy impact test reports per API 2C latest revision on the following components:

- Socket Body
- Pin

Copyright © 2023 The Crosby Group LLC All Rights Reserved

381-SY

- All single point shank hooks are genuine Crosby, forged alloy steel, Quenched & Tempered, and have the patented QUIC-CHECK® markings.
- Durable and allows longer continuous duty cycle.
- Can be used with magnet and drop ball.
- Single sheave design.
- Dual action hook that swings and rotates.
- Utilizes McKissick® roll-forged sheaves with flame-hardened grooves.
- Furnished standard with bronze bushed sheaves.
- Optional tapered roller bearings.
- Marked in short tons unless metric tag requested at time of order.

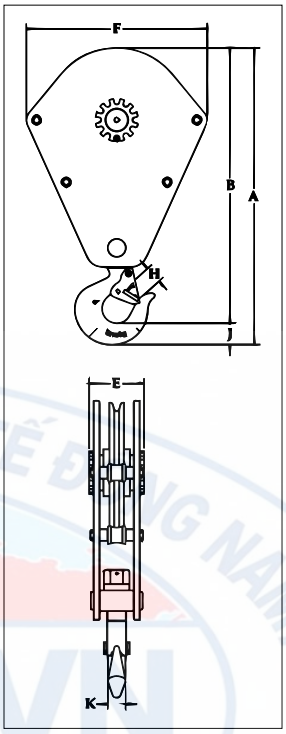

APPLICATION AND WARNING INFORMATION
SECTION 17

381-SY Scrap Handling Blocks

Model No.	Stock No.	Working Load Limit (t)	Sheave Diameter (mm)	Standard Wire Rope Diameters (mm)	Weight Each (kg)	Dimensions (mm)						
						A	B	E	F	H	J	K
S15S16L	2014810	13.5	406	14-22	129	944	868	161	578	70.0	75.5	60.5
S20S18L	2014812	18.0	457	16-25	179	1004	929	174	629	70.0	75.5	60.5
S25S20L	2014814	22.5	508	19-28	209	1071	995	174	679	70.0	75.5	60.5
S30S24L	2014816	27.0	610	22-32	320	1281	1189	199	781	82.5	92.0	76.0
S40S24L	2014818	36.0	610	22-32	370	1418	1289	199	781	86.0	129	82.5

4:1 Design Factor.

Copyright © 2023 The Crosby Group LLC All Rights Reserved

TU-480 Series

- Wide range of sizes available:
  - 27 and 54 metric tons (30 and 60 short Tons) capacity
  - 25mm to 60mm (1" to 2-1/4") wire rope diameter
  - 406mm to 610mm (16" to 24") sheave diameter
  - Larger capacity blocks available
- Meets or exceeds all requirements of ASME B30.26. Importantly, these blocks meet other critical performance requirements including fatigue life, impact properties and material traceability, not addressed by ASME B30.26.
- Marked in short tons unless metric tag requested at time of order.

APPLICATION AND WARNING INFORMATION
SECTION 17

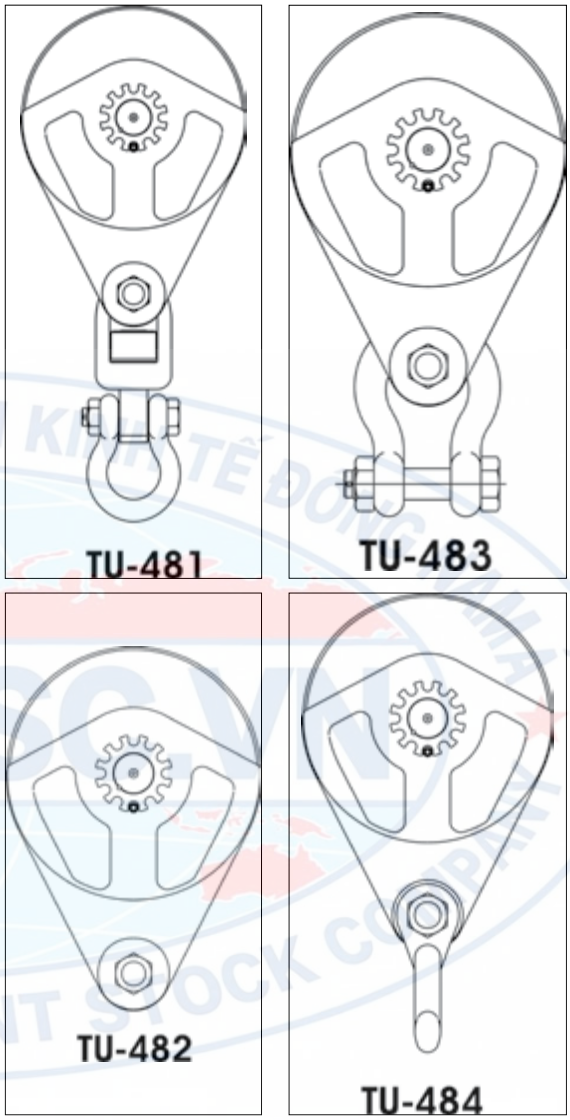

TU-481 / TU-482 / TU-483 / TU-484
High Capacity Snatch Blocks for Tilt-Up Wall Construction

Working Load Limit (t)	Sheave Diameter (mm)	Wire Rope Diameter (mm)	With Swivel Shackle		Tailboard Style		With Upset Shackle		With Fixed Shackle	
			TU-481 Stock No.	TU-481 Weight Each (kg)	TU-482 Stock No.	TU-482 Weight Each (kg)	TU-483 Stock No.	TU-483 Weight Each (kg)	TU-484 Stock No.	TU-484 Weight Each (kg)
27	406	32	2108327	107	2108330	63.5	2108333	81.6	2108651	72.6
27	406	38	2108351	107	2108354	63.5	2108357	81.6	2108657	72.6
27	508	32	2108387	113	2108390	70.3	2108393	88.5	2108666	79.4
54	508	38	2108411	177	2108414	70.3	2108417	88.5	2108672	79.4
54	457	32	2108453	177	2108456	104	2108459	154	2108462	132
54	457	38	2108483	177	2108486	104	2108489	154	2108492	132
54	610	32	2108528	204	2108531	132	2108534	181	2108537	159
54	610	38	2108558	204	2108561	132	2108564	181	2108567	159
54	610	44	2108588	204	2108591	132	2108594	181	2108597	159
54	610	51	2108618	204	2108621	132	2108624	181	2108627	159
54	610	57	2108633	204	2108636	132	2108639	181	2108642	159

4:1 Design Factor.
Contact our Block Hotline 800-772-1555 or visit thecrosbygroup.com/engineeredsolutions for more information.

Copyright © 2023 The Crosby Group LLC All Rights Reserved

McKISSICK

680 Series Construction Blocks

680 Construction Block with shackle

680 Construction Block with hanger

680 Construction Block bolt only

APPLICATION AND WARNING INFORMATION
SECTION 17

- Wide range of products available:
  - 4.5t to 90t capacity
  - 152mm to 610mm sheave diameter
  - 10mm to 32mm wire rope diameter
  - Larger capacity blocks available
- Equipped with genuine Crosby® forged steel Quenched & Tempered shackles that contain the patented QUIC-CHECK® markings.
- Design Factor of 4:1.
- All 680 Series Blocks are furnished standard with bronze bushings.
- All 680 Series Blocks 406mm and larger, are furnished with McKissick® roll-forged sheaves with flame-hardened grooves.
- Sheaves are lubricated through center pin with a separate lube channel to each bearing.

OPTIONS AVAILABLE
• Roller bearing sheaves
• Hanger and Bolt Only models available
• Third party testing with certification
• Galvanized finish – Most models

- Single sheave blocks have thimble dead end.
- Manufactured by an ISO 9001 and API Q1 Certified facility.
- Marked in short tons unless metric tag requested at time of order.
- Meets or exceeds all requirements of ASME B30.26. Importantly, these blocks meet other critical performance requirements including fatigue life, impact properties and material traceability, not addressed by ASME B30.26.

Block Loading Area

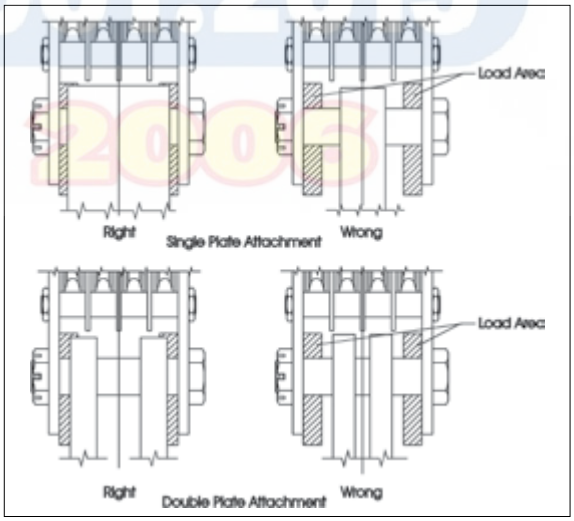

NOTE: The outside of attaching plates must be within the indicated load areas. Means must be provided to keep attaching plates equally spaced from the block side plates. For dimension information, including the load area, visit thecrosbygroup.com/tables.

Copyright © 2023 The Crosby Group LLC All Rights Reserved

McKissick® Construction Blocks

To see the legacy dimensional tables for McKissick® 680 Series Construction Blocks, visit thecrosbygroup.com/tables

	OD (mm)	SHV OD (mm)	Capacity in metric tons																	
			4.5	6.8	9.1	13.6	18.1	22.7	27.2	31.8	36.3	40.8	45.4	49.9	54.4	59.0	63.5	72.6	81.6	90.7
1 SHV	3861	152	■	■																
	5156	203	■	■	■															
	6452	254			■	■														
	7747	305			■	■														
	9042	356			■	■														
	11608	457					■	■												
2 SHV	3861	152	■	■	■															
	5156	203	■	■	■															
	6452	254			■	■														
	7747	305			■	■	■	■	■	■										
	9042	356			■	■	■	■	■	■										
	10312	406					■	■	■	■										
	11608	457							■	■	■	■								
	12903	508									■	■	■	■						
	15494	610									■	■	■	■						
3 SHV	3861	152	■	■	■															
	5156	203	■	■	■															
	6452	254			■	■	■	■	■	■										
	7747	305			■	■	■	■	■	■										
	9042	356			■	■	■	■	■	■	■	■								
	10312	406					■	■	■	■	■	■								
	11608	457									■	■	■	■	■	■				
	12903	508									■	■	■	■	■	■	■			
	15494	610											■	■	■	■				
4 SHV	5156	203			■		■	■												
	6452	254			■	■	■	■	■	■										
	7747	305					■	■	■	■	■	■								
	9042	356					■	■	■	■	■	■								
	10312	406							■	■	■	■	■	■						
	11608	457									■	■	■	■	■	■				
	12903	508													■	■	■	■	■	
	15494	610													■	■	■	■	■	
5 SHV	12903	508																■	■	■
	15494	610															■	■	■	■
6 SHV	12903	508																		■
	15494	610																		■

Review the table above to see all standard configurations available. We have also engineered thousands of special crane blocks, so it is very likely that we have the ideal solution to your rigging application. Visit thecrosbygroup.com/engineeredsolutions to learn more.

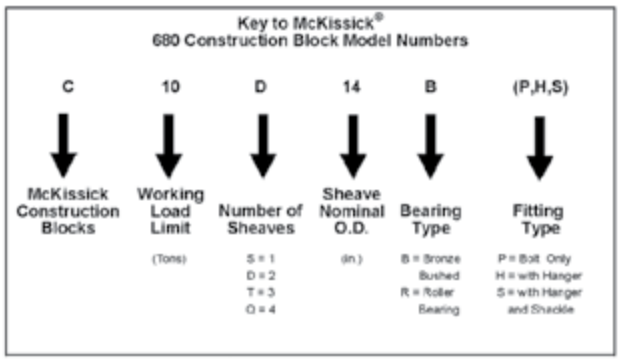

Sheave Diameter (mm)	Wireline Size (mm)									
	10	11	13	14	16	19	22	26	28	32
152	■	■	■							
203	■	■	■							
254		■	■	■	■					
305			■	■	■	■				
356			■	■	■	■				
406				■	■	■	■			
457					■	■	■	■		
508						■	■	■	■	
610							■	■	■	■

Copyright © 2023 The Crosby Group LLC All Rights Reserved

McKISSICK

750 Series Bridge Crane Blocks

- Wide range of products available (see tables below).
- Adjustable sheave spacing in 1/2” increments (1/4” on 6-1/2" size).
- Sheave pitch diameter minimum of 16 times rope diameter on standard sizes.
- All single point shank hooks are genuine Crosby, forged alloy steel, Quenched & Tempered, contain the patented QUIC-CHECK® markings and come with a world class latch that integrates with hook tip.
- Sheave bearings are maintenance free and sealed for life (10,000 hrs).
- Ability to attach optional anti two-block device.
- Available with shackle as lower connection point.
- Design Factor of 5 to 1.

Key to McKissick® Easy-Lift® Overhead Bridge Crane Blocks					
Single and Double Sheave Blocks				Double Sheave Blocks Only	
BC	05	D	08	B	36
McKissick® 750 Series Bridge Crane Blocks	Working Load Limit (t)	Number of Sheaves S = 1 D = 2	Sheave Diameter (in)	Center Pin Designation	Sheave Spacing in 1/8” Increments

APPLICATION AND WARNING INFORMATION
SECTION 17

BC-751
Single Sheave

BC-751 Single Sheave

Model 751 – Single Sheave					
WLL (t)	2	3	5	7.5	10
Sheave O.D.	6.5” 165mm	8” 203mm	10” 254mm	12” 305mm	14” 356mm
Pitch Diameter	5.69” 151mm	7.38” 187mm	9.25” 235mm	11” 279mm	12.5” 318mm
Wire Rope Diameter					
1/4” 6.5mm					
5/16” 8mm					
3/8” 9 - 10mm					
7/16” 11mm					
1/2” 12 - 13mm					
9/16” 14mm					
5/8” 16mm					
3/4” 19mm					
7/8” 22mm					
1” 25 - 26mm					

BC-752 Double Sheave

Model 752 – Double Sheave					
WLL (t)	3	5	7.5	10	15
Sheave O.D. (mm)	6.5” 165mm	8” 203mm	10” 254mm	12” 305mm	14” 356mm
Sheave Spacing Centerline (mm)	3.25” - 5” 82.6 - 127mm	4.5” - 6.5” 114 - 165mm	5.25” - 7.75” 133 - 203mm	6.5” - 10” 165 - 254mm	7.5” - 11” 191 - 279mm
Pitch Diameter (mm)	5.95” 150 - 152mm	7.38” 183 - 191mm	9.25” 228 - 236mm	11” 273 - 282mm	11” 273 - 282mm
Wireline*					
1/4” 6.5mm					
5/16” 8mm					
3/8” 9 - 10mm					
7/16” 11mm					
1/2” 12 - 13mm					
9/16” 14mm					
5/8” 16mm					
3/4” 19mm					

= Primary Wireline Size = Other Wireline Sizes

BC-752
Double Sheave

Copyright © 2023 The Crosby Group LLC All Rights Reserved

751 Series

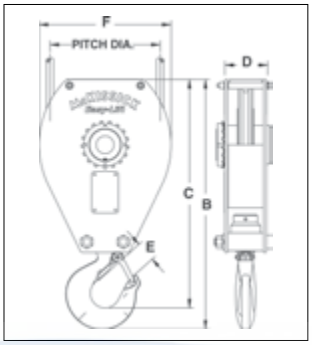

752 Series

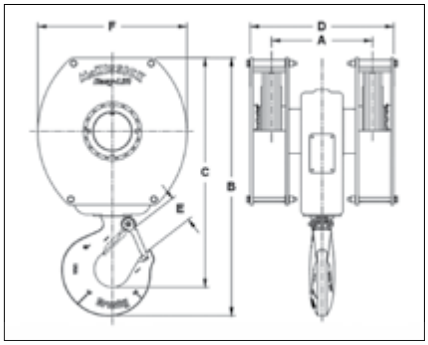

751 Series Bridge Crane Blocks

Model No.	Stock No.	Working Load Limit (t)	Sheave Diameter (mm)	Dimensions (mm) B	C	D	E	F	Standard Wire Rope Diameter (mm)	Weight Each (kg)
2 metric tons										
BC02S06	2022539	2	165	354	325	53.8	29.5	189	6	8.2
BC02S06	2022540	2	165	354	325	53.8	29.5	189	8	8.2
BC02S06	2022541	2	165	354	325	53.8	29.5	189	10	8.2
3 metric tons										
BC03S08	2022521	3	203	429	391	69.8	34.5	227	6	16
BC03S08	2022522	3	203	429	391	69.8	34.5	227	8	16
BC03S08	2022523	3	203	429	391	69.8	34.5	227	10	16
BC03S08	2022524	3	203	429	391	69.8	34.5	227	11	16
BC03S08	2022525	3	203	429	391	69.8	34.5	227	13	16
5 metric tons										
BC05S10	2022526	5	254	533	487	88.9	40.9	282	10	27
BC05S10	2022527	5	254	533	487	88.9	40.9	282	11	27
BC05S10	2022528	5	254	533	487	88.9	40.9	282	13	27
BC05S10	2022529	5	254	533	487	88.9	40.9	282	14	27
BC05S10	2022530	5	254	533	487	88.9	40.9	282	16	27
7.5 metric tons										
BC07S12	2022531	7.5	305	646	589	108	52.8	341	13	52
BC07S12	2022532	7.5	305	646	589	108	52.8	341	14	52
BC07S12	2022533	7.5	305	646	589	108	52.8	341	16	52
BC07S12	2022534	7.5	305	646	589	108	52.8	341	19	52
10 metric tons										
BC10S14	2022535	10	356	740	673	127	57.7	394	16	70
BC10S14	2022536	10	356	740	673	127	57.7	394	19	70
BC10S14	2022537	10	356	740	673	127	57.7	394	22	70
BC10S14	2022538	10	356	740	673	127	57.7	394	25	70

5:1 Design Factor.

752 Series Bridge Crane Blocks

Model No.	Stock No.	Working Load Limit (t)	Sheave Diameter (mm)	Dimensions (mm) A	B	C	D	E	F	Standard Wire Rope Diam. (mm)	Weight Each (kg)
3 metric tons											
BC03D06M26	2022731	3	165	82.6	341	304	146	34.5	189	6	16.8
BC03D06M26	2022739	3	165	82.6	341	304	146	34.5	189	8	16.8
BC03D06M26	2022747	3	165	82.6	341	304	146	34.5	189	10	16.8
BC03D06M28	2022732	3	165	88.9	341	304	146	34.5	189	6	16.8
BC03D06M28	2022740	3	165	88.9	341	304	146	34.5	189	8	16.8
BC03D06M28	2022748	3	165	88.9	341	304	146	34.5	189	10	16.8
BC03D06M30	2022733	3	165	95.3	341	304	146	34.5	189	6	16.8
BC03D06M30	2022741	3	165	95.3	341	304	146	34.5	189	8	16.8
BC03D06M30	2022749	3	165	95.3	341	304	146	34.5	189	10	16.8
BC03D06M32	2022734	3	165	102	341	304	146	34.5	189	6	16.8
BC03D06M32	2022742	3	165	102	341	304	146	34.5	189	8	16.8
BC03D06M32	2022750	3	165	102	341	304	146	34.5	189	10	16.8
BC03D06N34	2022735	3	165	108	341	304	171	34.5	189	6	16.8
BC03D06N34	2022743	3	165	108	341	304	171	34.5	189	8	16.8
BC03D06N34	2022751	3	165	108	341	304	171	34.5	189	10	16.8
BC03D06N36	2022736	3	165	114	341	304	171	34.5	189	6	16.8
BC03D06N36	2022744	3	165	114	341	304	171	34.5	189	8	16.8
BC03D06N36	2022752	3	165	114	341	304	171	34.5	189	10	16.8
BC03D06N38	2022737	3	165	121	341	304	171	34.5	189	6	16.8
BC03D06N38	2022745	3	165	121	341	304	171	34.5	189	8	16.8
BC03D06N38	2022753	3	165	121	341	304	171	34.5	189	10	16.8
BC03D06N40	2022738	3	165	127	341	304	171	34.5	189	6	16.8
BC03D06N40	2022746	3	165	127	341	304	171	34.5	189	8	16.8
BC03D06N40	2022754	3	165	127	341	304	171	34.5	189	10	16.8

5:1 Design Factor.

Copyright © 2023 The Crosby Group LLC All Rights Reserved

McKISSICK

752 Series Bridge Crane Blocks

Model No.	Stock No.	Working Load Limit (t)	Sheave Diameter (mm)	Dimensions (mm) A	B	C	D	E	F	Standard Wire Rope Diam. (mm)	Weight Each (kg)
5 metric tons											
BC05D08B36	2022550	5	203	114	417	371	195	40.9	227	6	34
BC05D08B36	2022551	5	203	114	417	371	195	40.9	227	8	34
BC05D08B36	2022552	5	203	114	417	371	195	40.9	227	10	34
BC05D08B36	2022553	5	203	114	417	371	195	40.9	227	11	34
BC05D08B36	2022554	5	203	114	417	371	195	40.9	227	13	34
BC05D08B40	2022555	5	203	127	417	371	195	40.9	227	6	34
BC05D08B40	2022556	5	203	127	417	371	195	40.9	227	8	34
BC05D08B40	2022557	5	203	127	417	371	195	40.9	227	10	34
BC05D08B40	2022558	5	203	127	417	371	195	40.9	227	11	34
BC05D08B40	2022559	5	203	127	417	371	195	40.9	227	13	34
BC05D08B44	2022560	5	203	140	417	371	195	40.9	227	6	34
BC05D08B44	2022561	5	203	140	417	371	195	40.9	227	8	34
BC05D08B44	2022562	5	203	140	417	371	195	40.9	227	10	34
BC05D08B44	2022563	5	203	140	417	371	195	40.9	227	11	34
BC05D08B44	2022564	5	203	140	417	371	195	40.9	227	13	34
BC05D08C44	2022565	5	203	140	417	371	221	40.9	227	6	34
BC05D08C44	2022566	5	203	140	417	371	221	40.9	227	8	34
BC05D08C44	2022567	5	203	140	417	371	221	40.9	227	10	34
BC05D08C44	2022568	5	203	140	417	371	221	40.9	227	11	34
BC05D08C44	2022569	5	203	140	417	371	221	40.9	227	13	34
BC05D08C48	2022570	5	203	152	417	371	221	40.9	227	6	34
BC05D08C48	2022571	5	203	152	417	371	221	40.9	227	8	34
BC05D08C48	2022572	5	203	152	417	371	221	40.9	227	10	34
BC05D08C48	2022573	5	203	152	417	371	221	40.9	227	11	34
BC05D08C48	2022574	5	203	152	417	371	221	40.9	227	13	34
BC05D08C52	2022575	5	203	165	417	371	221	40.9	227	6	34
BC05D08C52	2022576	5	203	165	417	371	221	40.9	227	8	34
BC05D08C52	2022577	5	203	165	417	371	221	40.9	227	10	34
BC05D08C52	2022578	5	203	165	417	371	221	40.9	227	11	34
BC05D08C52	2022579	5	203	165	417	371	221	40.9	227	13	34
7.5 metric tons											
BC07D10D42	2022580	7.5	254	133	514	457	221	52.8	282	10	57
BC07D10D42	2022581	7.5	254	133	514	457	221	52.8	282	11	57
BC07D10D42	2022582	7.5	254	133	514	457	221	52.8	282	13	57
BC07D10D42	2022583	7.5	254	133	514	457	221	52.8	282	14	57
BC07D10D42	2022584	7.5	254	133	514	457	221	52.8	282	16	57
BC07D10D46	2022585	7.5	254	146	514	457	221	52.8	282	10	57
BC07D10D46	2022586	7.5	254	146	514	457	221	52.8	282	11	57
BC07D10D46	2022587	7.5	254	146	514	457	221	52.8	282	13	57
BC07D10D46	2022588	7.5	254	146	514	457	221	52.8	282	14	57
BC07D10D46	2022589	7.5	254	146	514	457	221	52.8	282	16	57
BC07D10D50	2022590	7.5	254	159	514	457	221	52.8	282	10	57
BC07D10D50	2022591	7.5	254	159	514	457	221	52.8	282	11	57
BC07D10D50	2022592	7.5	254	159	514	457	221	52.8	282	13	57
BC07D10D50	2022593	7.5	254	159	514	457	221	52.8	282	14	57
BC07D10D50	2022594	7.5	254	159	514	457	221	52.8	282	16	57
BC07D10E48	2022595	7.5	254	152	514	457	240	52.8	282	10	57
BC07D10E48	2022596	7.5	254	152	514	457	240	52.8	282	11	57
BC07D10E48	2022597	7.5	254	152	514	457	240	52.8	282	13	57
BC07D10E48	2022598	7.5	254	152	514	457	240	52.8	282	14	57
BC07D10E48	2022599	7.5	254	152	514	457	240	52.8	282	16	57
BC07D10E52	2022600	7.5	254	165	514	457	240	52.8	282	10	57
BC07D10E52	2022601	7.5	254	165	514	457	240	52.8	282	11	57
BC07D10E52	2022602	7.5	254	165	514	457	240	52.8	282	13	57
BC07D10E52	2022603	7.5	254	165	514	457	240	52.8	282	14	57
BC07D10E52	2022604	7.5	254	165	514	457	240	52.8	282	16	57
BC07D10E56	2022605	7.5	254	178	514	457	240	52.8	282	10	57
BC07D10E56	2022606	7.5	254	178	514	457	240	52.8	282	11	57
BC07D10E56	2022607	7.5	254	178	514	457	240	52.8	282	13	57
BC07D10E56	2022608	7.5	254	178	514	457	240	52.8	282	14	57
BC07D10E56	2022609	7.5	254	178	514	457	240	52.8	282	16	57
BC07D10F56	2022610	7.5	254	178	514	457	265	52.8	282	10	57
BC07D10F56	2022611	7.5	254	178	514	457	265	52.8	282	11	57
BC07D10F56	2022612	7.5	254	178	514	457	265	52.8	282	13	57
BC07D10F56	2022613	7.5	254	178	514	457	265	52.8	282	14	57
BC07D10F56	2022614	7.5	254	178	514	457	265	52.8	282	16	57
BC07D10F60	2022615	7.5	254	191	514	457	265	52.8	282	10	57
BC07D10F60	2022616	7.5	254	191	514	457	265	52.8	282	11	57
BC07D10F60	2022617	7.5	254	191	514	457	265	52.8	282	13	57
BC07D10F60	2022618	7.5	254	191	514	457	265	52.8	282	14	57
BC07D10F60	2022619	7.5	254	191	514	457	265	52.8	282	16	57

5:1 Design Factor.

Copyright © 2023 The Crosby Group LLC All Rights Reserved

752 Series Bridge Crane Blocks

Model No.	Stock No.	Working Load Limit (t)	Sheave Diameter (mm)	Dimensions (mm) A	B	C	D	E	F	Standard Wire Rope Diam. (mm)	Weight Each (kg)
BC07D10F64	2022620	7.5	254	203	514	457	265	52.8	282	10	57
BC07D10F64	2022621	7.5	254	203	514	457	265	52.8	282	11	57
BC07D10F64	2022622	7.5	254	203	514	457	265	52.8	282	13	57
BC07D10F64	2022623	7.5	254	203	514	457	265	52.8	282	14	57
BC07D10F64	2022624	7.5	254	203	514	457	265	52.8	282	16	57
10 metric tons											
BC10D12G52	2022625	10	305	165	590	524	278	57.7	342	13	109
BC10D12G52	2022626	10	305	165	590	524	278	57.7	342	14	109
BC10D12G52	2022627	10	305	165	590	524	278	57.7	342	16	109
BC10D12G52	2022628	10	305	165	590	524	278	57.7	342	19	109
BC10D12G56	2022629	10	305	178	590	524	278	57.7	342	13	109
BC10D12G56	2022630	10	305	178	590	524	278	57.7	342	14	109
BC10D12G56	2022631	10	305	178	590	524	278	57.7	342	16	109
BC10D12G56	2022632	10	305	178	590	524	278	57.7	342	19	109
BC10D12G60	2022633	10	305	191	590	524	278	57.7	342	13	109
BC10D12G60	2022634	10	305	191	590	524	278	57.7	342	14	109
BC10D12G60	2022635	10	305	191	590	524	278	57.7	342	16	109
BC10D12G60	2022636	10	305	191	590	524	278	57.7	342	19	109
BC10D12G64	2022637	10	305	203	590	524	278	57.7	342	13	109
BC10D12G64	2022638	10	305	203	590	524	278	57.7	342	14	109
BC10D12G64	2022639	10	305	203	590	524	278	57.7	342	16	109
BC10D12G64	2022640	10	305	203	590	524	278	57.7	342	19	109
BC10D12I68	2022657	10	305	216	590	524	329	57.7	342	13	109
BC10D12I68	2022658	10	305	216	590	524	329	57.7	342	14	109
BC10D12I68	2022659	10	305	216	590	524	329	57.7	342	16	109
BC10D12I68	2022660	10	305	216	590	524	329	57.7	342	19	109
BC10D12I72	2022661	10	305	229	590	524	329	57.7	342	13	109
BC10D12I72	2022662	10	305	229	590	524	329	57.7	342	14	109
BC10D12I72	2022663	10	305	229	590	524	329	57.7	342	16	109
BC10D12I72	2022664	10	305	229	590	524	329	57.7	342	19	109
BC10D12I76	2022665	10	305	241	590	524	329	57.7	342	13	109
BC10D12I76	2022666	10	305	241	590	524	329	57.7	342	14	109
BC10D12I76	2022667	10	305	241	590	524	329	57.7	342	16	109
BC10D12I76	2022668	10	305	241	590	524	329	57.7	342	19	109
BC10D12I80	2022669	10	305	254	590	524	329	57.7	342	13	109
BC10D12I80	2022670	10	305	254	590	524	329	57.7	342	14	109
BC10D12I80	2022671	10	305	254	590	524	329	57.7	342	16	109
BC10D12I80	2022672	10	305	254	590	524	329	57.7	342	19	109
15 metric tons											
BC15D12J60	2022673	15	305	191	645	568	303	76.7	342	13	122
BC15D12J60	2022674	15	305	191	645	568	303	76.7	342	14	122
BC15D12J60	2022675	15	305	191	645	568	303	76.7	342	16	122
BC15D12J60	2022676	15	305	191	645	568	303	76.7	342	19	122
BC15D12J64	2022677	15	305	203	645	568	303	76.7	342	13	122
BC15D12J64	2022678	15	305	203	645	568	303	76.7	342	14	122
BC15D12J64	2022679	15	305	203	645	568	303	76.7	342	16	122
BC15D12J64	2022680	15	305	203	645	568	303	76.7	342	19	122
BC15D12J68	2022681	15	305	216	645	568	303	76.7	342	13	122
BC15D12J68	2022682	15	305	216	645	568	303	76.7	342	14	122
BC15D12J68	2022683	15	305	216	645	568	303	76.7	342	16	122
BC15D12J68	2022684	15	305	216	645	568	303	76.7	342	19	122
BC15D12J72	2022685	15	305	229	645	568	303	76.7	342	13	122
BC15D12J72	2022686	15	305	229	645	568	303	76.7	342	14	122
BC15D12J72	2022687	15	305	229	645	568	303	76.7	342	16	122
BC15D12J72	2022688	15	305	229	645	568	303	76.7	342	19	122
BC15D12L76	2022705	15	305	241	645	568	354	76.7	342	13	122
BC15D12L76	2022706	15	305	241	645	568	354	76.7	342	14	122
BC15D12L76	2022707	15	305	241	645	568	354	76.7	342	16	122
BC15D12L76	2022708	15	305	241	645	568	354	76.7	342	19	122
BC15D12L80	2022709	15	305	254	645	568	354	76.7	342	13	122
BC15D12L80	2022710	15	305	254	645	568	354	76.7	342	14	122
BC15D12L80	2022711	15	305	254	645	568	354	76.7	342	16	122
BC15D12L80	2022712	15	305	254	645	568	354	76.7	342	19	122
BC15D12L84	2022713	15	305	267	645	568	354	76.7	342	13	122
BC15D12L84	2022714	15	305	267	645	568	354	76.7	342	14	122
BC15D12L84	2022715	15	305	267	645	568	354	76.7	342	16	122
BC15D12L84	2022716	15	305	267	645	568	354	76.7	342	19	122
BC15D12L88	2022717	15	305	279	645	568	354	76.7	342	13	122
BC15D12L88	2022718	15	305	279	645	568	354	76.7	342	14	122
BC15D12L88	2022719	15	305	279	645	568	354	76.7	342	16	122
BC15D12L88	2022720	15	305	279	645	568	354	76.7	342	19	122

5:1 Design Factor.

Copyright © 2023 The Crosby Group LLC All Rights Reserved

McKISSICK®

UB-500 Series Top Swiveling Overhaul Balls

With
S320
Eye Hook

With
S1316 A
SHUR-LOC®
Eye Hook

Both styles available with optional **McKissick®** Wedge Socket Assembly or S-422 **TERMINATOR** Wedge Socket

UWO 422T
TERMINATOR
Wedge Only

- Sizes 3.6 tonnes through 27 tonnes are available with Crosby's S1316A positive-locking SHUR-LOC® hook, which may be used for lifting personnel. Meets the intent of OSHA Rule 1926.1431(g)(1)(i)(A) and 1926.1501(g)(4)(iv)(B).
- Design Factor 4:1
- The top swivel design on the UB-500 assures the ball remains stationary if the wireline spins.
- The swivel incorporates a sealed roller thrust bearing together with a grease fitting for easy lubrication.
- Each ball can be equipped with the new McKissick® US-422T Wedge Socket which can be easily adjusted to fit various sizes of wireline by changing the wedge (ensure that correct wedge is used for selected wireline size).
- All hooks used on UB-500 Overhaul Balls (S320, S320N & S1316A) are forged from alloy steel. The S320 and S320N hooks come complete with latches.
- The S320 hook (PL latch) and the S320N hook (S4320 latch), with the proper latch attached, may be used for personnel lifting when secured with proper device (bolt, nut and pin for the PL latch; Cotter pin for the S4320 latch). Meets the intent of OSHA Rule 1926.1431(g)(1)(i)(A) and 1926.1501(g)(4)(iv)(B).

Overhaul Ball Assembly					Optional US-422T Wedge Sockets					
McKissick® UB-500 Model No.	UB-500 "E" Eye Hook Stock No.	UB-500 "S" SHUR-LOC® Stock No.	Working Load Limit (t)	Weight Each (kg)	Wireline Size (mm)	Model No.	Wedge Socket Assy. Stock No.	Weight Each (kg)	Wedge Only Stock No.	Weight Each (kg)
MB4T35E	1036000*	1036005	3.6	26.3	10	US4T	1044300	2.09	1047310	2.09
MB4T85E	1036009*	1036018	3.6	46.3	11	US4T	1044309	2.09	1047301	2.09
MB4T150E	1036027*	1036032	3.6	73.5	13	US4T	1044318	2.09	1047329	2.09
MB4T200E	1036036*	1036041	3.6	91.2	13	US5T	1044327	3.86	1047338	3.86
MB7T85E	1036045*	1036050	6.3	49.4	14	US5T	1044336	3.86	1047347	3.86
MB7T150E	1036054*	1036063	6.3	77.1	16	US5T	1044345	3.86	1047356	3.86
MB7T200E	1036072*	1036077	6.3	95.3	16	US6T	1044354	4.26	1047365	4.26
MB7T285E	1036081*	1036086	6.3	146	19	US6T	1044363	4.26	1047374	4.26
MB10T150E	1036090*	1036095	9.0	98						
MB10T200E	1036099*	1036108	9.0	118						
MB10T285E	1036117*	1036122	9.0	166	16	US6T	1044354	4.26	1047365	4.26
MB10T350E	1036126*	1036131	9.0	183	19	US6T	1044363	4.26	1047374	4.26
MB10T650E	1036135*	1036140	9.0	326	22	US8T	1044404	14.3	1047425	14.3
MB12T150E	1036144*	1036520	10.8	98	26	US8T	1044417	14.7	1047431	14.7
MB12T200E	1036153*	1036529	10.8	117	28	US10T	1044426	25.1	1047440	25.1
MB12T285E	1036171*	1036538	10.8	166	32	US10T	1044435	26.3	1047459	26.3
MB12T350E	1036180*	1036547	10.8	183						
MB12T650E	1036189*	1036556	10.8	326						
MB15T200E	1036198*	1036565	13.5	135						
MB15T350E	1036207*	1036574	13.5	207						
MB15T650E	1036216*	1036583	13.5	342						
MB15T1150E	1036225*	1036592	13.5	595						
MB20T200E	1036234*	1036611	18.0	135	16	US8AT	1044372	9.0	1047383	9.0
MB20T350E	1036243*	1036620	18.0	207	19	US8AT	1044381	9.3	1047392	9.3
MB20T650E	1036252*	1036629	18.0	342	22	US8T	1044404	14.3	1047425	14.3
MB20T1150E	1036261*	1036638	18.0	595	26	US8T	1044417	14.7	1047431	14.7
MB25T350E	1036270	1036647	22.5	242	28	US10T	1044426	25.1	1047440	25.1
MB25T650E	1036279	1036656	22.5	392	32	US10T	1044435	26.3	1047459	26.3
MB25T1150E	1036288	1036665	22.5	645						
MB30T650E	1036297	1036674	27.0	392						
MB30T1150E	1036306	1036683	27.0	645						

4:1 Design Factor. * Utilizes Crosby "N" style hooks with integrated latch. Replacement latch kit is S-4320. PL latch and S-4055 latch will not fit. Standard Crosby S-5 Thrust style swivels can not be used with UB-500 Overhaul Balls. For replacement swivels, contact Crosby Customer Service.

Copyright © 2023 The Crosby Group LLC All Rights Reserved

UB-500 TOP SWIVEL OVERHAUL BALLS

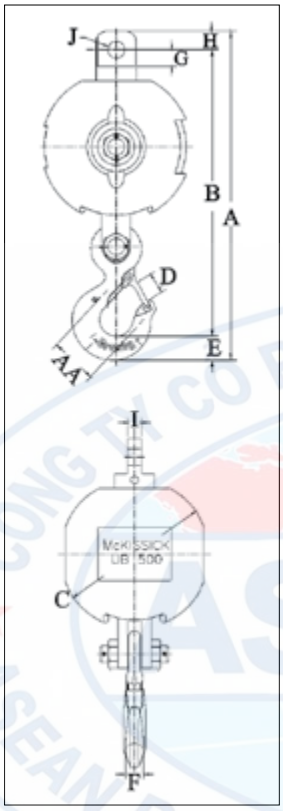

UB-500E Top Swivel Overhaul Balls with 320 Eye Hooks

Model No.	UB-500 "E" Stock No.*	Dimensions (mm)										
		A	B	C	D	E	F	G	H	I	J	AA
MB4T35E	1036000*	510	439	191	34.5	36.6	28.4	47.8	35.1	22.4	33.3	63.5
MB4T85E	1036009*	533	461	235	34.5	36.6	28.4	47.8	35.1	22.4	33.3	63.5
MB4T150E	1036027*	558	487	286	34.5	36.6	28.4	47.8	35.1	22.4	33.3	63.5
MB4T200E	1036036*	568	496	318	34.5	36.6	28.4	47.8	35.1	22.4	33.3	63.5
MB7T85E	1036045*	589	517	235	40.9	46.0	35.1	47.8	35.1	22.4	33.3	76.0
MB7T150E	1036054*	624	543	286	40.9	46.0	35.1	47.8	35.1	22.4	33.3	76.0
MB7T200E	1036072*	632	551	318	40.9	46.0	35.1	47.8	35.1	22.4	33.3	76.0
MB7T285E	1036081*	657	576	353	40.9	46.0	35.1	47.8	35.1	22.4	33.3	76.0
MB10T150E	1036090*	799	691	286	53.0	57.0	41.1	70.0	51.0	22.4	45.2	102
MB10T200E	1036099*	808	700	318	53.0	57.0	41.1	70.0	51.0	31.8	45.2	102
MB10T285E	1036117*	832	724	353	53.0	57.0	41.1	70.0	51.0	31.8	45.2	102
MB10T350E	1036126*	846	738	381	53.0	57.0	41.1	70.0	51.0	31.8	45.2	102
MB10T650E	1036135*	884	776	456	53.0	57.0	41.1	70.0	51.0	31.8	45.2	102
MB12T150E	1036144*	799	691	286	53.0	57.0	41.1	70.0	51.0	31.8	45.2	102
MB12T200E	1036153*	808	700	318	53.0	57.0	41.1	70.0	51.0	31.8	45.2	102
MB12T285E	1036171*	832	724	353	53.0	57.0	41.1	70.0	51.0	31.8	45.2	102
MB12T350E	1036180*	846	738	381	53.0	57.0	41.1	70.0	51.0	31.8	45.2	102
MB12T650E	1036189*	909	776	456	53.0	57.0	41.1	70.0	51.0	31.8	45.2	102
MB15T200E	1036198*	955	828	318	76.5	76.0	60.5	60.5	51.0	31.8	45.2	127
MB15T350E	1036207*	986	859	381	76.5	76.0	60.5	60.5	51.0	31.8	45.2	127
MB15T650E	1036216*	1022	895	456	76.5	76.0	60.5	60.5	51.0	31.8	45.2	127
MB15T1150E	1036225*	1072	945	549	76.5	76.0	60.5	60.5	51.0	31.8	45.2	127
MB20T200E	1036234*	955	828	318	76.5	76.0	60.5	60.5	51.0	31.8	45.2	127
MB20T350E	1036243*	986	859	381	76.5	76.0	60.5	60.5	51.0	31.8	45.2	127
MB20T650E	1036252*	1022	895	456	76.5	76.0	60.5	60.5	51.0	31.8	45.2	127
MB20T1150E	1036261*	1072	945	549	76.5	76.0	60.5	60.5	51.0	31.8	45.2	127
MB25T350E	1036270	1198	1021	381	76.0	92.0	76.0	84.0	70.0	44.5	45.2	165
MB25T650E	1036279	1248	1086	456	76.0	92.0	76.0	84.0	70.0	44.5	45.2	165
MB25T1150E	1036288	1297	1135	549	76.0	92.0	76.0	84.0	70.0	44.5	45.2	165
MB30T650E	1036297	1248	1086	456	76.0	92.0	76.0	84.0	70.0	44.5	45.2	165
MB30T1150E	1036306	1297	1135	549	76.0	92.0	76.0	84.0	70.0	44.5	45.2	165

4:1 Design Factor. *3.6 short Ton through 27 short Ton models use Crosby "N" style hooks with integrated latch.

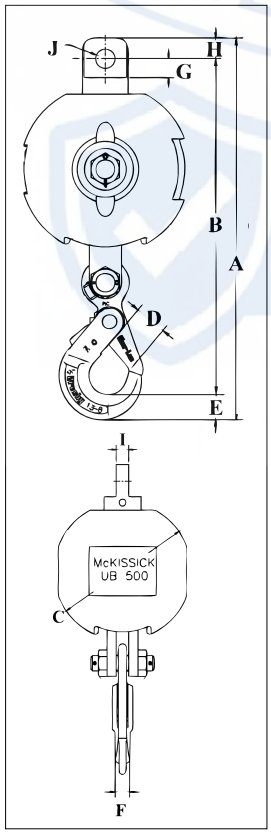

UB-500S Top Swivel Overhaul Balls with SHUR-LOC® Hooks

Model No.	UB-500 "S" Stock No.	Dimensions (mm)									
		A	B	C	D	E	F	G	H	I	J
MB4T35S	1036005	525	462	191	46.5	29.2	23.9	47.8	35.1	22.4	33.3
MB4T85S	1036018	547	484	235	46.5	29.2	23.9	47.8	35.1	22.4	33.3
MB4T150S	1036032	573	509	286	46.5	29.2	23.9	47.8	35.1	22.4	33.3
MB4T200S	1036041	582	519	318	46.5	29.2	23.9	47.8	35.1	22.4	33.3
MB7T85S	1036050	607	541	235	53.5	42.2	29.5	47.8	35.1	22.4	33.3
MB7T150S	1036063	642	566	286	53.5	42.2	29.5	47.8	35.1	22.4	33.3
MB7T200S	1036077	650	575	318	53.5	42.2	29.5	47.8	35.1	22.4	33.3
MB7T285S	1036086	675	600	353	53.5	42.2	29.5	47.8	35.1	22.4	33.3
MB10T150S	1036095	793	691	286	63.0	52.5	38.1	70.0	51.0	31.8	45.2
MB10T200S	1036108	803	700	318	63.0	52.5	38.1	70.0	51.0	31.8	45.2
MB10T285S	1036122	827	724	353	63.0	52.5	38.1	70.0	51.0	31.8	45.2
MB10T350S	1036131	841	738	381	63.0	52.5	38.1	70.0	51.0	31.8	45.2
MB10T650S	1036140	879	776	456	63.0	52.5	38.1	70.0	51.0	31.8	45.2

Copyright © 2023 The Crosby Group LLC All Rights Reserved

McKISSICK®

UB-500 Series Non Swiveling Overhaul Balls

S320
Eye Hook

S1316 A
SHUR-LOC®
Eye Hook

Both styles available with optional **McKissick®** Wedge Socket Assembly or S-422 **TERMINATOR** Wedge Socket

UWO 422T
TERMINATOR
Wedge Only

- Sizes 3.6 short Tons through 13.5 short Tons are available with Crosby's S1316A "Positive Locking" SHUR-LOC® hook which may be used for lifting personnel. Meets the intent of OSHA Rule 1926.1431(g)(1)(i)(A) and 1926.1501(g)(4)(iv)(B).
- Design Factor 4:1.
- Each ball can be equipped with the new McKissick® US-422T Wedge Socket which can be easily adjusted to fit various sizes of wireline by changing the wedge.

Key to McKissick® UB-500 Utility Overhaul Ball Model Number

MB	4	T	35	E
McKissick® Utility Overhead Ball	Working Load Limit (Tons)	Swivel Style T = Top NS = Non	Ball Only Weight	Hook Style E = 320 or 320N S = SHUR-LOC® Eye Hook

Overhaul Ball Assembly

McKissick® UB-500 Model No.	UB-500 "E" Eye Hook Stock No.*	UB-500 "S" SHUR-LOC® Stock No.	Working Load Limit (t)	Weight Each (kg)
MB4NS35E	1036402	1036407	3.6	24.5
MB4NS85E	1036411	1036416	3.6	44.5
MB4NS150E	1036420	1036425	3.6	71.5
MB4NS200E	1036429	1036434	3.6	90.7
MB7NS85E	1036438	1036443	6.3	47.2
MB7NS150E	1036447	1036452	6.3	74.8
MB7NS200E	1036456	1036461	6.3	92.9
MB7NS285E	1036465	1036470	6.3	143
MB10NS150E	1036474	1036479	9.0	89.8
MB10NS200E	1036483	1036488	9.0	110
MB10NS285E	1036492	1036497	9.0	157
MB10NS350E	1036501	1036506	9.0	175
MB10NS650E	1036510	1036511	9.0	318
MB12NS150E	1036519	–	10.8	89.8
MB12NS200E	1036528	–	10.8	109
MB12NS285E	1036537	–	10.8	157
MB12NS350E	1036546	–	10.8	175
MB12NS650E	1036555	–	10.8	318
MB15NS200E	1036564	–	13.5	121
MB15NS350E	1036573	–	13.5	193
MB15NS650E	1036582	–	13.5	327
MB15NS1150E	1036591	–	13.5	581

Optional US-422T Wedge Sockets

Wire Rope Diameter (mm)	Model No.	Wedge Socket Assy. Stock No.	Weight Each (kg)	Wedge Only Stock No.	Weight Each (kg)
10	US4T	1044300	2.09	1047310	2.09
11	US4T	1044309	2.09	1047301	2.09
13	US4T	1044318	2.09	1047329	2.09
13	US5T	1044327	3.86	1047338	3.86
14	US5T	1044336	3.86	1047347	3.86
16	US5T	1044345	3.86	1047356	3.86
16	US6T	1044354	4.26	1047365	4.26
19	US6T	1044363	4.26	1047374	4.26
16	US6T	1044354	4.26	1047365	4.26
19	US6T	1044363	4.26	1047374	4.26
22	US8T	1044404	14.3	1047425	14.3
26	US8T	1044417	14.7	1047431	14.7
28	US10T	1044426	25.1	1047440	25.1
32	US10T	1044435	26.3	1047459	26.3
16	US8AT	1044372	9.0	1047383	9.0
19	US8AT	1044381	9.3	1047392	9.3
22	US8T	1044404	14.3	1047425	14.3
26	US8T	1044417	14.7	1047431	14.7
28	US10T	1044426	25.1	1047440	25.1
32	US10T	1044435	26.3	1047459	26.3

4:1 Design Factor. *Utilizes Crosby "N" style hooks with integrated latch. Replacement latch kit is S-4320. PL latch and S-4055 latch will not fit.

Copyright © 2023 The Crosby Group LLC All Rights Reserved

UB-500 NON SWIVEL OVERHAUL BALLS

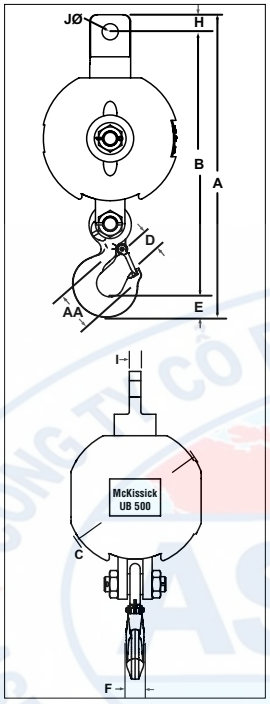

UB-500NS Non Swivel Overhaul Balls with 320N Eye Hooks

Model No.	UB-500NS "E" Stock No.*	Dimensions (mm)									
		A	B	C	D	E	F	H	I	J	AA
MB4NS35E	1036402	510	439	191	34.5	36.6	28.4	35.1	19.1	33.3	63.5
MB4NS85E	1036411	533	461	235	34.5	36.6	28.4	35.1	19.1	33.3	63.5
MB4NS150E	1036420	558	487	286	34.5	36.6	28.4	35.1	19.1	33.3	63.5
MB4NS200E	1036429	568	496	318	34.5	36.6	28.4	35.1	19.1	33.3	63.5
MB7NS85E	1036438	589	517	235	40.9	46.0	35.1	35.1	19.1	33.3	76.0
MB7NS150E	1036447	624	543	286	40.9	46.0	35.1	35.1	19.1	33.3	76.0
MB7NS200E	1036456	632	551	318	40.9	46.0	35.1	35.1	19.1	33.3	76.0
MB7NS285E	1036465	657	576	353	40.9	46.0	35.1	35.1	19.1	33.3	76.0
MB10NS150E	1036474	799	691	286	53.0	57.0	41.1	51.0	31.8	45.2	102
MB10NS200E	1036483	808	700	318	53.0	57.0	41.1	51.0	31.8	45.2	102
MB10NS285E	1036492	832	724	353	53.0	57.0	41.1	51.0	31.8	45.2	102
MB10NS350E	1036501	846	738	381	53.0	57.0	41.1	51.0	31.8	45.2	102
MB10NS650E	1036510	884	776	456	53.0	57.0	41.1	51.0	31.8	45.2	102
MB12NS150E	1036519	799	691	286	53.0	57.0	41.1	51.0	31.8	45.2	102
MB12NS200E	1036528	808	700	318	53.0	57.0	41.1	51.0	31.8	45.2	102
MB12NS285E	1036537	832	724	353	53.0	57.0	41.1	51.0	31.8	45.2	102
MB12NS350E	1036546	846	738	381	53.0	57.0	41.1	51.0	31.8	45.2	102
MB12NS650E	1036555	909	776	456	53.0	57.0	41.1	51.0	31.8	45.2	102
MB15NS200E	1036564	955	828	318	76.5	76.0	60.5	51.0	31.8	45.2	127
MB15NS350E	1036573	986	859	381	76.5	76.0	60.5	51.0	31.8	45.2	127
MB15NS650E	1036582	1022	895	456	76.5	76.0	60.5	51.0	31.8	45.2	127
MB15NS1150E	1036591	1072	945	549	76.5	76.0	60.5	51.0	31.8	45.2	127

4:1 Design Factor. *Utilizes Crosby "N" style hooks with integrated latch.
Replacement latch kit is S-4320. PL latch and S-4055 latch will not fit.

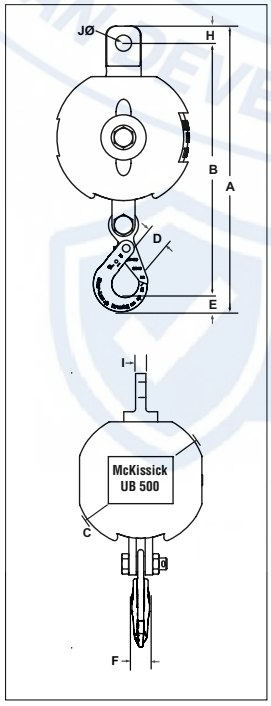

UB-500NS Non Swivel Overhaul Balls with SHUR-LOC® Hooks

Model No.	UB-500NS "S" Stock No.	Dimensions (mm)								
		A	B	C	D	E	F	H	I	J
MB4NS35S	1036407	525	462	191	46.5	29.2	23.9	35.1	19.1	33.3
MB4NS85S	1036416	547	484	235	46.5	29.2	23.9	35.1	19.1	33.3
MB4NS150S	1036425	573	509	286	46.5	29.2	23.9	35.1	19.1	33.3
MB4NS200S	1036434	582	519	318	46.5	29.2	23.9	35.1	19.1	33.3
MB7NS85S	1036443	607	541	235	53.5	42.2	29.5	35.1	19.1	33.3
MB7NS150S	1036452	642	566	286	53.5	42.2	29.5	35.1	19.1	33.3
MB7NS200S	1036461	650	575	318	53.5	42.2	29.5	35.1	19.1	33.3
MB7NS285S	1036470	675	600	353	53.5	42.2	29.5	35.1	19.1	33.3
MB10NS150S	1036479	793	691	286	63.0	52.0	38.1	51.0	31.8	45.2
MB10NS200S	1036488	803	700	318	63.0	52.0	38.1	51.0	31.8	45.2
MB10NS285S	1036497	827	724	353	63.0	52.0	38.1	51.0	31.8	45.2
MB10NS350S	1036506	841	738	381	63.0	52.0	38.1	51.0	31.8	45.2
MB10NS650S	1036511	879	776	456	63.0	52.0	38.1	51.0	31.8	45.2

Copyright © 2023 The Crosby Group LLC All Rights Reserved

Split
Overhaul
Ball

- Attaches easily to Wireline.

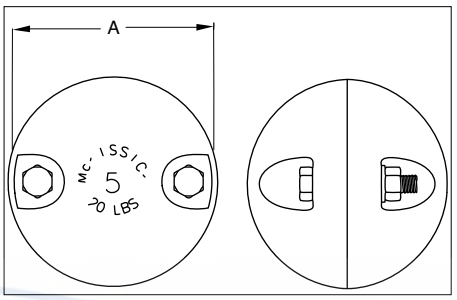

Split Overhaul Ball

Catalog No.	Stock No.	Wire Rope Diameter (mm)	Weight Each (kg)	Ball Diameter A (mm)
SHB - 15	2003822	6-8	6.80	129
SHB - 20	2003830	10	9.07	137
SHB - 50	2003831	13 - 16	22.7	181
SHB - 100	2003832	16 - 19 - 22	45.4	233

CÔNG TY CỔ PHẦN PHÁT TRIỂN KINH TẾ ĐÔNG NAM Á
ASEAN JSC.VN
ISO 9001:2015
Since 2006

AS-15

- Utilizes genuine Crosby hooks which are forged alloy steel, Quenched & Tempered, and contain the patented QUIC-CHECK® marking.
- Entire overhaul ball is zinc plated to resist corrosion.
- Designed with angular contact bearings which maximizes efficiency, reliability, and service life of swivel and extend the life of the wireline.
- Available with wide jaw opening that utilizes nylon spools and shields.
- Designed for applications where headroom is critical.
- Other upper fittings available upon request.

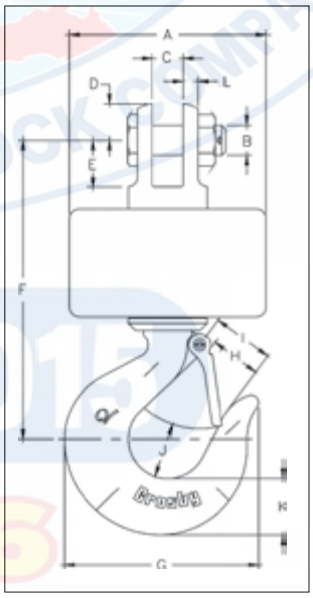

Angular Contact Bearing Swivel Overhaul Balls

Stock No.	Working Load Limit (t)	Wire Rope Diameter (mm)	Dimensions (mm)												Weight Each (kg)
			A	B	C	D	E	F	G	H	I	J	K	L	
2009806	1.36	10	102	12.7	12.7	17.5	19.8	160	104	28.4	31.0	30.2	28.4	7.85	4.08
2009807	2.72	13	127	19.1	19.1	23.9	30.2	217	126	34.0	38.1	35.1	36.6	9.65	8.62
2003969	4.54	16	175	22.4	26.9	28.4	39.6	275	165	42.9	47.8	44.5	46.0	14.2	19.5
2009808	7.71	19	178	30.2	39.6	34.0	53.0	349	221	57.0	63.5	65.0	66.0	13.5	27.2

5:1 Design Factor.

Copyright © 2023 The Crosby Group LLC All Rights Reserved

UB-550E

UB-550 Top Swivel Overhaul Balls

- Top swivel design assures that the ball remains stationary if the wireline spins.
- Utilizes genuine forged Crosby hooks, bail and connector.
- Quenched and Tempered.
- Both styles of hooks incorporate QUIC-CHECK® Deformation and Angle Indicators.
- Easy disassembly for periodic inspection and maintenance.
- Design factor of 4:1.

UB-550S

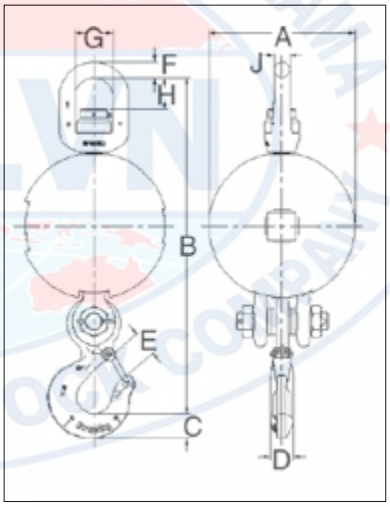

UB-550E Top Swivel Overhaul Balls with Crosby Eye Hook

Stock No.	Model No.	Working Load Limit (t)	Weight Each (kg)	Dimensions (mm)								
				A	B	C	D	E	F	G	H	J
1036621	MB04BT085E	3.6	51.3	226	533	36.6	33.3	34.5	28.4	69.9	57.9	28.4
1036649	MB04BT150E	3.6	80.7	268	577	36.6	33.3	34.5	28.4	69.9	57.9	28.4
1036667	MB04BT200E	3.6	105	295	602	36.6	33.3	34.5	28.4	69.9	57.9	28.4
1036685	MB07BT085E	6.3	51.3	226	571	46.0	42.2	40.9	28.4	69.9	57.9	28.4
1036705	MB07BT150E	6.3	80.7	268	615	46.0	42.2	40.9	28.4	69.9	57.9	28.4
1036723	MB07BT200E	6.3	105	295	640	46.0	42.2	40.9	28.4	69.9	57.9	28.4

4:1 Design Factor.

UB-550S Top Swivel Overhaul Balls with SHUR-LOC® Eye Hook

Stock No.	Model No.	Working Load Limit (t)	Weight Each (kg)	Dimensions (mm)								
				A	B	C	D	E	F	G	H	J
1036630	MB04BT085S	3.6	51.3	226	592	42.4	29.5	53.6	28.4	69.9	57.9	28.4
1036658	MB04BT150S	3.6	80.7	268	636	42.4	29.5	53.6	28.4	69.9	57.9	28.4
1036676	MB04BT200S	3.6	105	295	661	42.4	29.5	53.6	28.4	69.9	57.9	28.4
1036694	MB07BT085S	6.3	51.3	226	592	42.4	29.5	53.6	28.4	69.9	57.9	28.4
1036714	MB07BT150S	6.3	80.7	268	636	42.4	29.5	53.6	28.4	69.9	57.9	28.4
1036732	MB07BT200S	6.3	105	295	661	42.4	29.5	53.6	28.4	69.9	57.9	28.4

4:1 Design Factor.

Copyright © 2023 The Crosby Group LLC All Rights Reserved

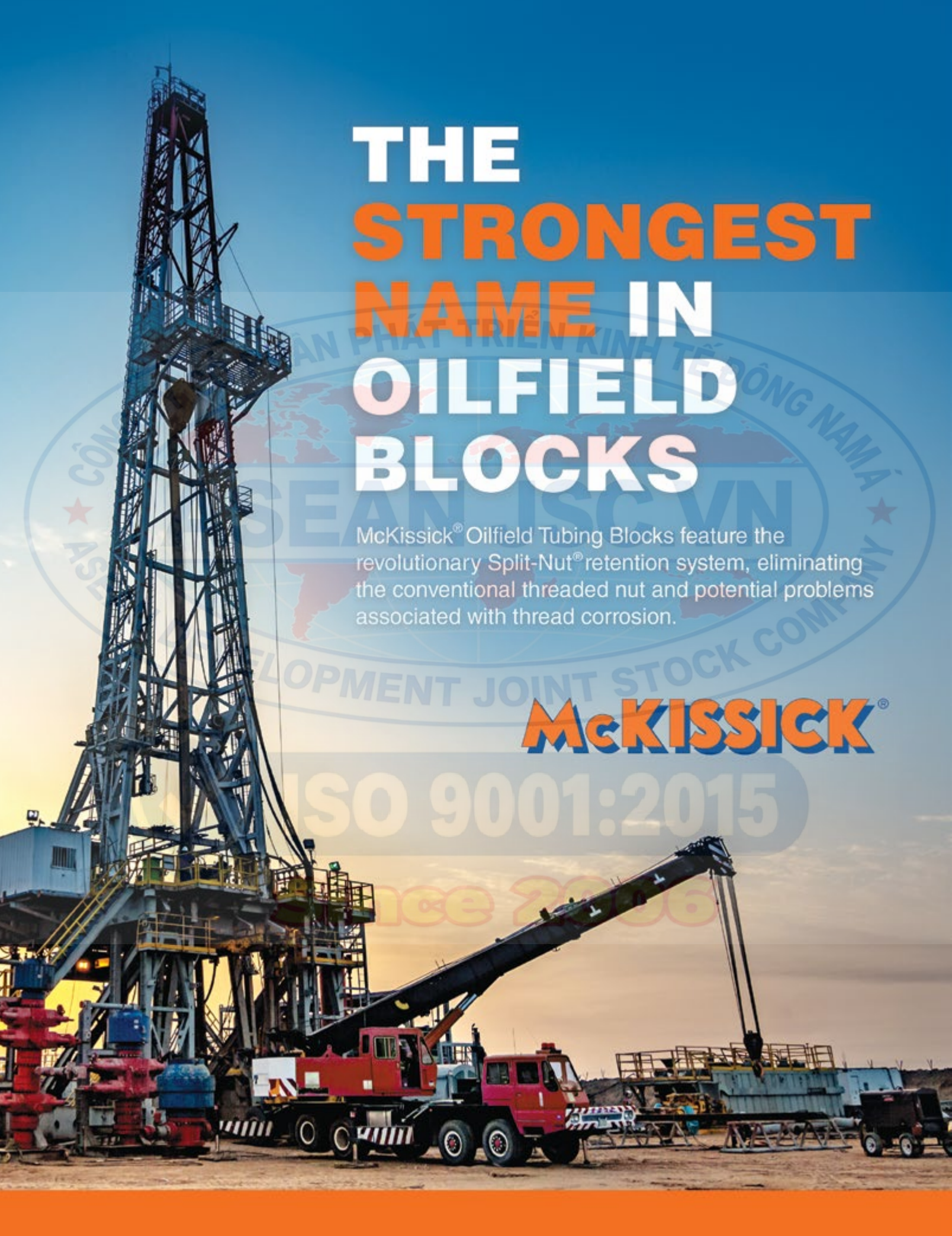

ASEAN ISCVN
ISO 9001:2015
Since 2006

VALUE ADDED

- **Dual Rated:** To meet the requirements of both short tons and metric tons.
- **Metric Rating:** McKissick® snatch blocks are metric rated to a design factor of 4:1. Because they are metric rated with a world-class design, they are applicable to global use without conversion.
- **US Rating:** When compared to other blocks that are rated in short tons, the design factor of McKissick snatch blocks is 4.5 to 1.
- **Fatigue Properties:** McKissick snatch blocks are fatigue rated. The blocks are designed to meet specific fatigue performance levels and the requirements for the new Euronorm Standards: 20,000 cycles at 1-1/2 times the Working Load Limit.
- **Latch Kits:** McKissick snatch blocks that utilize a hook as an end fitting connection are equipped with latches.
- **Application Information:** Application and warning information for tackle block systems is attached directly to each block. In addition, each block has a product warning sticker attached directly to it for the purpose of giving specific warning instructions about the block.
- **Lock Nut:** McKissick snatch blocks have a special high-performance lock nut on the non-moveable side plate for securing the sheave pin.
- **Sheave & Wireline:** Sheaves for McKissick snatch blocks have a machine-formed groove.
- **Secondary Securement Systems:** McKissick snatch blocks are designed to incorporate a secondary securement system that retains the end fitting connection bolt when the block is in the closed position. In addition, a patented system retains the end fitting connection bolt when the block is in the open position, thus eliminating the loss of block parts.

404
TAIL BOARD

418
WITH HOOK

419
WITH SHACKLE

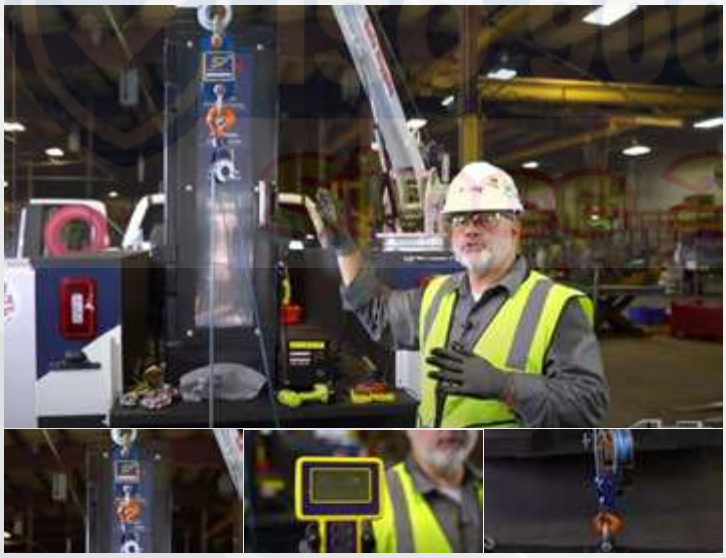

SNATCH BLOCK DEMONSTRATION

- How to determine snatch block capacity
- How to use a snatch block to gain a mechanical advantage
- Importance of using a load cell in conjunction with a snatch block on a lift

WATCH VIDEO
thecrosbygroup.com/snatchblockdemo

Copyright © 2023 The Crosby Group LLC All Rights Reserved

McKISSICK

SNATCH BLOCK WITH SHACKLE FITTING, SINGLE SHEAVE, 2-12t

Fatigue Rated CE

L-170

L-160

417

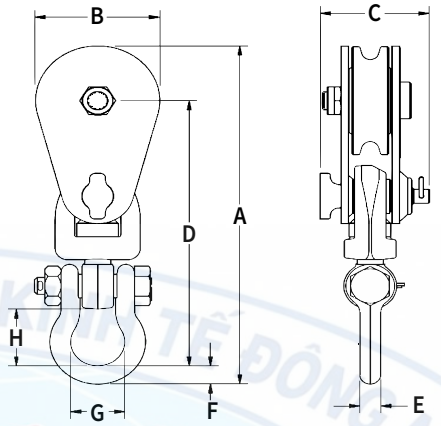

- Opening feature permits easy insertion of rope without reeving, or while the block is suspended.
- Bolt for opening feature is retained, to ensure no lost bolts.
- Forged steel swivel tees, yokes and shackles.
- Can be furnished with bronze bushings or roller bearings.
- Center pin equipped with pressure lube fitting.
- All sizes feature sheave grooves suited for a range of wireline diameters.
- Meets or exceeds all requirements of ASME B30.26. Importantly, these blocks meet other critical performance requirements including fatigue life and material traceability, not addressed by ASME B30.26.
- 417 alloy snatch blocks feature a significant reduction in weight compared to snatch blocks made of non-alloy materials.
- L-170 snatch blocks (with shackle or hook) feature an easy-to-open bolt design. The retaining bolt is released by rotating the fitting assembly, no tools required.
- Crosby's Engineered Solutions Group is ready to discuss your requirements and help select or develop the ideal block for your application.
- Visit thecrosbygroup.com/engineeredsolutions for more information.

APPLICATION AND WARNING INFORMATION
SECTION 17

Working Load Limit (t)	Wire Rope Diameter (mm)	Sheave Diameter (mm)	Bearing Code	Weight Each (kg)	Catalog No.	Stock No.	Dimensions (mm)							
							A	B	C	D	E	F	G	H
2 metric tons														
2	8 - 10	76	BB	1.8	419 w/Eye	109037†	220	76	67	168	14	14	35	35
2	8 - 10	76	BB	2.3	419	109091	235	76	67	185	13	13	34	40
4 metric tons														
4	10 - 13	114	BB	5.4	419	109064	340	108	79	268	16	18	43	51
5 metric tons														
5	10 - 13 ‡	102	BB	5.0	L-170	599828	353	114	75	278	16	18	43	51
5	10 - 13 ‡	102	RB	5.0	L-170	599837	353	114	75	278	16	18	43	51
6 metric tons														
6*	10 - 13	127	BB	5.9	L-160	599524	351	130	94	268	16	18	43	51
6*	10 - 13	127	RB	5.9	L-160	599533	351	130	94	268	16	18	43	51
8 metric tons														
8	16 - 19	152	BB	12.7	419	109126	481	152	106	373	32	32	76	88
8	16 - 19	152	RB	12.7	419	109153	481	152	106	373	32	32	76	88
8	16 - 19	203	BB	15.0	419	109224	533	206	106	398	32	32	76	88
8	16 - 19	203	RB	15.0	419	109251	533	206	106	398	32	32	76	88
8	16 - 19	254	BB	19.5	419	109322	586	257	106	425	32	32	76	88
8	16 - 19	254	RB	19.5	419	109359	586	257	106	425	32	32	76	88
8	16 - 19	305	BB	24.9	419	109420	657	308	106	471	32	32	76	88
8	16 - 19	305	RB	24.9	419	109457	657	308	106	471	32	32	76	88
8	16 - 19	356	BB	30.4	419	109527	695	359	106	484	32	32	76	88
8	16 - 19	356	RB	30.4	419	109545	695	359	106	484	32	32	76	88
12 metric tons														
12*	16 - 19	146	BB	13.2	L-160	599588	483	152	106	375	32	32	76	88
12*	16 - 19	146	RB	13.2	L-160	599597	483	152	106	375	32	32	76	88
12	19 - 22	152	BB	12.7	417	168972	481	152	106	373	32	32	76	88
12	19 - 22	152	RB	12.7	417	193757	481	152	106	373	32	32	76	88
12	19 - 22	203	BB	15.4	417	168990	533	206	106	398	32	32	76	88
12	19 - 22	203	RB	15.4	417	193819	533	206	106	398	32	32	76	88
12	19 - 22	254	BB	19.1	417	193882	586	257	106	425	32	32	76	88
12	19 - 22	254	RB	19.1	417	193935	586	257	106	425	32	32	76	88

4:1 Design Factor. *3.5:1 Design Factor. † Fitted with 32mm ID Swivel Eye ‡ Special Dual Groove Sheave also accepts 32mm Manilla Rope.

Copyright © 2023 The Crosby Group LLC All Rights Reserved

SNATCH BLOCK WITH SHACKLE FITTING, SINGLE SHEAVE, 15-60t

Fatigue Rated CE

421 419 431 435

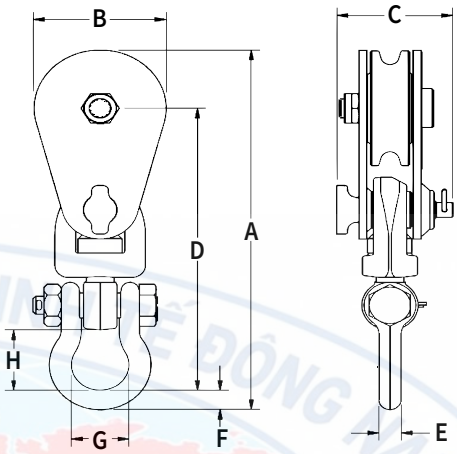

- Opening feature permits easy insertion of rope without reeving, or while the block is suspended.
- Can be furnished with bronze bushings or roller bearings.
- Center pin equipped with pressure lube fitting.
- All sizes feature sheave grooves suited for a range of wireline diameters.
- Meets or exceeds all requirements of ASME B30.26. Importantly, these blocks meet other critical performance requirements including fatigue life and material traceability, not addressed by ASME B30.26.
- 435 alloy snatch blocks feature a significant reduction in weight compared to snatch blocks made of non-alloy materials.
- Crosby's Engineered Solutions Group is ready to discuss your requirements and help select or develop the ideal block for your application. Visit thecrosbygroup.com/engineeredsolutions for more information.

APPLICATION AND WARNING INFORMATION SECTION 17

Working Load Limit (t)	Wire Rope Diameter (mm)	Sheave Diameter (mm)	Bearing Code	Weight Each (kg)	Catalog No.	Stock No.	Dimensions (mm) A	B	C	D	E	F	G	H
15 metric tons														
15	19 - 22	203	BB	26.8	421	108308	584	206	129	437	38	44	79	79
15	19 - 22	203	RB	26.8	421	108309	584	206	129	437	38	44	79	79
15	19 - 22	254	BB	30.8	421	108390	629	257	129	456	38	44	79	79
15	19 - 22	254	RB	30.8	421	108391	629	257	129	456	38	44	79	79
15	19 - 22	406	BB	59.0	419	109607	806	409	129	559	38	44	79	79
15	19 - 22	406	RB	59.0	419	109625	806	409	129	559	38	44	79	79
15	22 - 26	457	BB	72.1	419	109643	841	460	129	565	38	44	79	79
15	22 - 26	457	RB	72.1	419	109661	841	460	129	565	38	44	79	79
20 metric tons														
20	26 - 29	203	BB	41.7	431	121022	675	206	152	502	51	70	94	101
20	26 - 29	203	RB	41.7	431	121040	675	206	152	502	51	70	94	101
20	26 - 29	254	BB	50.8	431	121095	727	257	152	526	51	70	94	102
20	26 - 29	254	RB	50.8	431	121111	727	257	152	526	51	70	94	102
20	26 - 29	305	BB	59.0	431	121175	779	311	152	553	51	70	94	102
20	26 - 29	305	RB	59.0	431	121193	779	311	152	553	51	70	94	102
20	26 - 29	356	BB	72.6	431	121255	838	356	152	591	51	70	94	102
20	26 - 29	356	RB	72.6	431	121273	838	356	152	591	51	70	94	102
25 metric tons														
25	26 - 32	203	BB	46.7	435	208954	688	210	156	513	51	70	94	102
25	26 - 32	254	BB	53.1	435	208965	745	260	156	545	51	70	94	102
25	26 - 32	457	BB	122.5	431	119495	1051	464	181	740	51	79	89	122
25	26 - 32	457	RB	127.0	431	119496	1051	464	181	740	51	79	89	122
30 metric tons														
30	26 - 32	305	BB	94.3	435	208976	930	311	178	695	51	79	89	122
30	26 - 32	356	BB	104.3	435	208977	987	362	178	727	51	79	89	122
30	26 - 32	508	BB	228.2	431	119589	1331	514	211	974	64	100	143	179
30	26 - 32	508	RB	220.0	431	119598	1331	514	211	974	64	100	143	179
30	26 - 32	610	BB	263.5	431	119605	1422	616	211	1016	64	100	143	179
30	26 - 32	610	RB	260.8	431	119614	1422	616	211	1016	64	100	143	179
60 metric tons														
60	26 - 32	305	BB	142.9	435	8027291	1058	308	220	843	52	61	146	155

4:1 Design Factor.

Copyright © 2023 The Crosby Group LLC All Rights Reserved

McKISSICK

SNATCH BLOCK WITH HOOK FITTING, SINGLE SHEAVE, 2-12t

Fatigue Rated CE

416

L-170

L-160

C-720

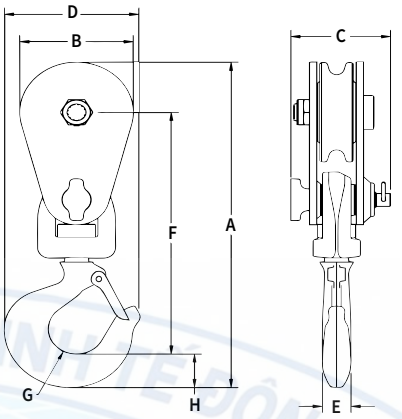

- Opening feature permits easy insertion of rope without reeving, or while the block is suspended.
- Bolt for opening feature is retained, to ensure no lost bolts.
- Forged steel swivel tees, yokes and hooks.
- Furnished with a latch installed.
- Can be furnished with bronze bushings or roller bearings.
- Center pin equipped with pressure lube fitting.
- All sizes feature sheave grooves suited for a range of wireline diameters.
- Meets or exceeds all requirements of ASME B30.26. Importantly, these blocks meet other critical performance requirements including fatigue life and material traceability, not addressed by ASME B30.26.
- 416 alloy snatch blocks feature a significant reduction in weight compared to snatch blocks made of non-alloy materials.
- L-170 snatch blocks (with shackle or hook) feature an easy-to-open bolt design. The retaining bolt is released by rotating the fitting assembly, no tools required.
- Crosby's Engineered Solutions Group is ready to discuss your requirements and help select or develop the ideal block for your application.
- Visit thecrosbygroup.com/engineeredsolutions for more information.

APPLICATION AND WARNING INFORMATION
SECTION 17

Working Load Limit (t)	Wire Rope Diameter (mm)	Sheave Diameter (mm)	Bearing Code	Weight Each (kg)	Catalog No.	Stock No.	Dimensions (mm) A	B	C	D	E	F	G	H
2 metric tons														
2	8 - 10	76	BB	2.3	418	108038	247	76	67	91	19	184	19	25
4 metric tons														
4	10 - 13	114	BB	5.4	418	108065	359	108	79	133	25	257	24	47
5 metric tons														
5	10 - 13 ‡	102	BB	5.0	L-170	599800	371	116	75	133	25	267	24	47
5	10 - 13 ‡	102	RB	5.0	L-170	599819	371	116	75	133	25	267	24	47
6 metric tons														
6*	10 - 13	127	BB	5.9	L-160	599506	370	130	94	133	25	257	24	47
6*	10 - 13	127	RB	5.9	L-160	599515	370	130	94	133	25	257	24	47
7 short Tons														
7T*	19 - 22	6	BB	12.7	C-720	280010	410	152	97	159	37	288	32	41
8 metric tons														
8	16 - 19	152	BB	12.2	418	108127	481	152	106	173	40	344	33	61
8	16 - 19	152	RB	12.2	418	108154	481	152	106	173	40	344	33	61
8	16 - 19	203	BB	15.0	418	108225	534	206	106	173	40	369	33	61
8	16 - 19	203	RB	15.0	418	108252	534	206	106	173	40	369	33	61
8	16 - 19	254	BB	18.6	418	108323	586	257	106	173	40	396	33	61
8	16 - 19	254	RB	18.6	418	108350	586	257	106	173	40	396	33	61
8	16 - 19	305	BB	21.8	418	108421	658	308	106	173	40	442	33	61
8	16 - 19	305	RB	21.8	418	108458	658	308	106	173	40	442	33	61
8	16 - 19	356	BB	24.9	418	108528	696	359	106	173	40	455	33	61
8	16 - 19	356	RB	24.9	418	108546	696	359	106	173	40	455	33	61
12 metric tons														
12*	16 - 19	146	BB	13.2	L-160	599560	508	152	106	200	40	365	37	67
12*	16 - 19	146	RB	13.2	L-160	599579	508	152	106	200	40	365	37	67
12	19 - 22	152	BB	11.8	416	193427	505	152	106	200	40	362	37	67
12	19 - 22	152	RB	11.8	416	193472	505	152	106	200	40	362	37	67
12	19 - 22	203	BB	15.0	416	193490	558	206	106	200	40	388	37	67
12	19 - 22	203	RB	15.0	416	193542	558	206	106	200	40	388	37	67
12	19 - 22	254	BB	18.6	416	193613	610	257	106	200	40	415	37	67
12	19 - 22	254	RB	18.6	416	193677	610	257	106	200	40	415	37	67

4:1 Design Factor. *3.5:1 Design Factor.. ‡ Special Dual Groove Sheave also accepts 32mm Manilla Rope

Copyright © 2023 The Crosby Group LLC All Rights Reserved

SNATCH BLOCK WITH HOOK FITTING, SINGLE SHEAVE, 15-30t

Fatigue Rated CE

420 418 430 434

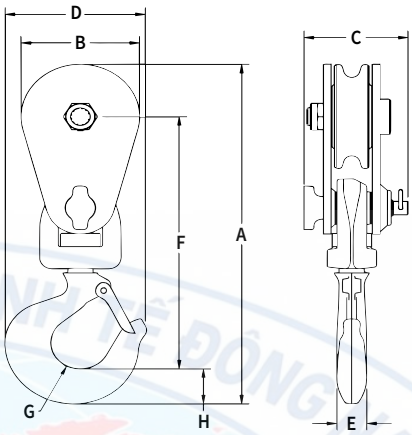

- Opening feature permits easy insertion of rope without reeving, or while the block is suspended.
- Furnished with a latch installed.
- Can be furnished with bronze bushings or roller bearings.
- Center pin equipped with pressure lube fitting.
- All sizes feature sheave grooves suited for a range of wireline diameters.
- Meets or exceeds all requirements of ASME B30.26. Importantly, these blocks meet other critical performance requirements including fatigue life and material traceability, not addressed by ASME B30.26.
- 434 snatch blocks feature a significant reduction in weight compared to snatch blocks made of non-alloy materials.
- Crosby's Engineered Solutions Group is ready to discuss your requirements and help select or develop the ideal block for your application.
- Visit thecrosbygroup.com/engineeredsolutions for more information.

APPLICATION AND WARNING INFORMATION SECTION 17

Working Load Limit (t)	Wire Rope Diameter (mm)	Sheave Diameter (mm)	Bearing Code	Weight Each (kg)	Catalog No.	Stock No.	Dimensions (mm) A	B	C	D	E	F	G	H
15 metric tons														
15	19 - 22	203	BB	23.1	420	108275	597	206	129	212	45	419	38	74
15	19 - 22	203	RB	23.1	420	108276	597	206	129	212	45	419	38	74
15	19 - 22	254	BB	28.6	420	108371	641	257	129	212	45	438	38	74
15	19 - 22	254	RB	28.6	420	108372	641	257	129	212	45	438	38	74
15	19 - 22	406	BB	59.0	418	108608	819	409	129	212	45	540	38	74
15	19 - 22	406	RB	59.0	418	108626	819	409	129	212	45	540	38	74
15	22 - 26	457	BB	68.0	418	108644	851	460	129	212	45	546	38	74
15	22 - 26	457	RB	68.0	418	108662	851	460	129	212	45	546	38	74
20 metric tons														
20	26 - 29	203	BB	34.0	430	120023	657	206	152	239	51	468	38	86
20	26 - 29	203	RB	34.0	430	120041	657	206	152	239	51	468	38	86
20	26 - 29	254	BB	40.4	430	120096	710	257	152	239	51	495	38	86
20	26 - 29	254	RB	40.4	430	120112	710	257	152	239	51	495	38	86
20	26 - 29	305	BB	46.7	430	120176	762	311	152	239	51	521	38	86
20	26 - 29	305	RB	46.7	430	120194	762	311	152	239	51	521	38	86
20	26 - 29	356	BB	55.8	430	120256	821	356	152	239	51	558	38	86
20	26 - 29	356	RB	55.8	430	120274	821	356	152	239	51	558	38	86
25 metric tons														
25	26 - 32	203	BB	40.8	434	208896	675	210	156	238	51	484	38	86
25	26 - 32	254	BB	48.5	434	208910	727	260	156	238	51	511	38	86
25	26 - 32	457	BB	108.9	430	119486	1052	464	181	299	64	710	49	110
25	26 - 32	457	RB	108.9	430	119487	1052	464	181	299	64	710	49	110
30 metric tons														
30	26 - 32	305	BB	74.8	434	208931	923	311	178	299	64	657	49	110
30	26 - 32	356	BB	81.6	434	208932	980	362	178	299	64	689	49	110
30	26 - 32	508	BB	170.1	430	119507	1325	514	211	387	76	917	57	150
30	26 - 32	508	RB	170.1	430	119516	1325	514	211	387	76	917	57	150
30	26 - 32	610	BB	204.1	430	119525	1416	616	211	387	76	959	57	150
30	26 - 32	610	RB	204.1	430	119534	1416	616	211	387	76	959	57	150

4:1 Design Factor.

Copyright © 2023 The Crosby Group LLC All Rights Reserved

McKISSICK

SNATCH BLOCK, TAIL BOARD, SINGLE SHEAVE, 2-12t

Fatigue Rated

404

L-170

L-160

402

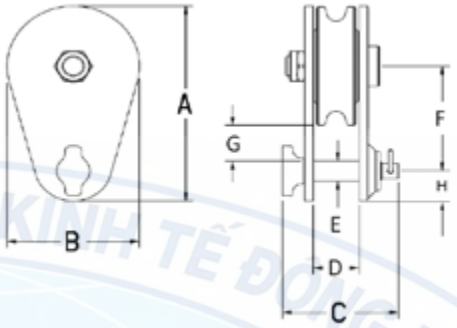

- Opening feature permits easy insertion of rope without reeving. Bolt for opening feature is retained, to ensure no lost bolts.
- All sizes feature sheave grooves suited for a range of wireline diameters.
- Meets or exceeds all requirements of ASME B30.26. Importantly, these blocks meet other critical performance requirements including fatigue life and material traceability, not addressed by ASME B30.26.
- 402 snatch blocks feature a significant reduction in weight compared to snatch blocks made of non-alloy materials.
- Crosby's Engineered Solutions Group is ready to discuss your requirements and help select or develop the ideal block for your application.
- Visit thecrosbygroup.com/engineeredsolutions for more information.

APPLICATION AND WARNING INFORMATION
SECTION 17

Working Load Limit (t)	Wire Rope Diameter (mm)	Sheave Diameter (mm)	Bearing Code	Weight Each (kg)	Model No.	Stock No.	Dimensions (mm)							
							A	B	C	D	E	F	G	H
2 metric tons														
2	8 - 10	76	BB	1.4	404	102016	124	76	67	26	13	67	22	19.1
4 metric tons														
4	10 - 13	114	BB	3.2	404	102025	197	108	79	40	19	108	41	35.1
5 metric tons														
5	10 - 13 ‡	102	BB	3.2	L-170	599846	213	114	75	40	22	119	57	36.6
5	10 - 13 ‡	102	RB	5.0	L-170	599855	213	114	75	40	22	119	57	36.6
6 metric tons														
6*	10 - 13	127	BB	5.9	L-160	599542	210	130	94	39	19	108	35	36.6
6*	10 - 13	127	RB	5.9	L-160	599551	210	130	94	39	19	108	35	36.6
8 metric tons														
8	16 - 19	152	BB	6.8	404	102098	251	152	106	46	25	130	41	44.5
8	16 - 19	152	RB	6.8	404	102114	251	152	106	46	25	130	41	44.5
8	16 - 19	203	BB	9.5	404	102169	303	206	106	46	25	155	41	44.5
8	16 - 19	203	RB	9.5	404	102187	303	206	106	46	25	155	41	44.5
8	16 - 19	254	BB	13.2	404	102230	356	257	106	46	25	183	43	44.5
8	16 - 19	254	RB	13.2	404	102258	356	257	106	46	25	183	43	44.5
8	16 - 19	305	BB	16.3	404	102301	427	308	106	46	25	229	64	44.5
8	16 - 19	305	RB	16.3	404	102329	427	308	106	46	25	229	64	44.5
12 metric tons														
12*	16 - 19	146	BB	13.2	L-160	599604	253	152	106	44	25	133	47	44.5
12*	16 - 19	146	RB	13.2	L-160	599613	253	152	106	44	25	133	47	44.5
12	19 - 22	152	BB	6.8	402	179238	251	152	106	46	25	130	41	44.5
12	19 - 22	152	RB	6.8	402	179283	251	152	106	46	25	130	41	44.5
12	19 - 22	203	BB	9.5	402	179318	303	206	106	46	25	155	41	44.5
12	19 - 22	203	RB	9.5	402	179363	303	206	106	46	25	155	41	44.5
12	19 - 22	254	BB	13.2	402	179434	356	257	106	46	25	183	43	44.5
12	19 - 22	254	RB	13.2	402	179498	356	257	106	46	25	183	43	44.5

4:1 Design Factor. *3.5:1 Design Factor. ‡ Special Dual Groove Sheave also accepts 32mm Manilla Rope.

Copyright © 2023 The Crosby Group LLC All Rights Reserved

SNATCH BLOCK, TAIL BOARD, SINGLE SHEAVE, 15-60t

Fatigue Rated

406

407

401

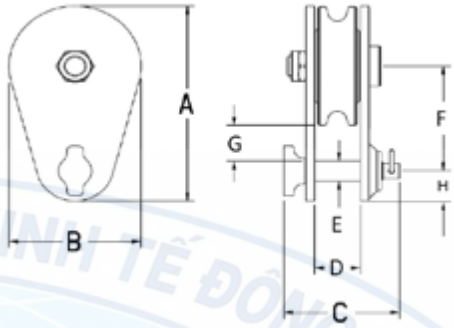

- Opening feature permits easy insertion of rope without reeving. Bolt for opening feature is retained, to ensure no lost bolts.
- Can be furnished with bronze bushings or roller bearings.
- Center pin equipped with pressure lube fitting.
- All sizes feature sheave grooves suited for a range of wireline diameters.
- Meets or exceeds all requirements of ASME B30.26. Importantly, these blocks meet other critical performance requirements including fatigue life and material traceability, not addressed by ASME B30.26.

APPLICATION AND WARNING INFORMATION
SECTION 17

Working Load Limit (t)	Wire Rope Diameter (mm)	Sheave Diameter (mm)	Bearing Code	Weight Each (kg)	Model No.	Stock No.	Dimensions (mm)							
							A	B	C	D	E	F	G	H
15 metric tons														
15	19 - 22	203	BB	13.6	406	108311	335	206	130	60	32	171	54	60.5
15	19 - 22	203	RB	13.6	406	108312	335	206	130	60	32	171	54	60.5
15	19 - 22	254	BB	19.1	406	108406	379	257	130	60	32	191	49	60.5
15	19 - 22	254	RB	19.1	406	108407	379	257	130	60	32	191	49	60.5
20 metric tons														
20	26 - 29	203	BB	19.1	407	103523	344	206	152	65	38	181	60	60.5
20	26 - 29	203	RB	19.1	407	103541	344	206	152	65	38	181	60	60.5
20	26 - 29	254	BB	24.9	407	103603	397	257	152	65	38	208	62	60.5
20	26 - 29	254	RB	24.9	407	103621	397	257	152	65	38	208	62	60.5
20	26 - 29	305	BB	31.8	407	103685	451	311	152	65	38	235	65	60.5
20	26 - 29	305	RB	31.8	407	103701	451	311	152	65	38	235	65	60.5
20	26 - 29	356	BB	40.8	407	103765	511	356	152	65	38	272	75	60.5
20	26 - 29	356	RB	40.8	407	103783	511	356	152	65	38	272	75	60.5
25 metric tons														
25	26 - 32	203	BB	22.7	401	178151	343	210	156	65	38	181	60	57.2
25	26 - 32	254	BB	29.5	401	179167	392	260	156	65	38	208	62	53.8
25	26 - 32	457	BB	74.8	407	119652	625	464	181	77	44	330	79	63.5
25	26 - 32	457	RB	74.8	407	119653	625	464	181	77	44	330	79	63.5
30 metric tons														
30	26 - 32	305	BB	43.1	401	179178	473	311	178	77	44	254	79	63.5
30	26 - 32	356	BB	49.9	401	179187	530	362	178	77	44	286	86	63.5
30	26 - 32	508	BB	97.5	407	119669	734	514	211	90	57	387	105	88.9
30	26 - 32	508	RB	97.5	407	119678	734	514	211	90	57	387	105	88.9
30	26 - 32	610	BB	131.5	407	119687	826	616	211	90	57	429	95	88.9
30	26 - 32	610	RB	131.5	407	119696	826	616	211	90	57	429	95	88.9
60 metric tons														
60	26 - 32	305	BB	43.1	401	8027292	516	308	220	71	64	273	89	88.9

4:1 Design Factor.

Copyright © 2023 The Crosby Group LLC All Rights Reserved

McKISSICK

SNATCH BLOCK WITH HOOK OR SHACKLE FITTING DOUBLE SHEAVE, 4-12t

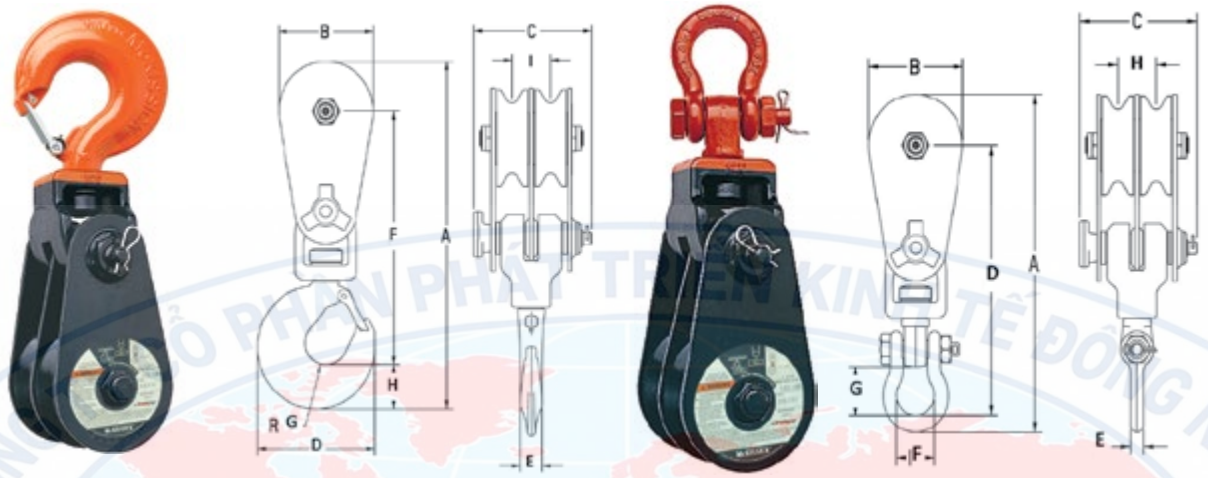

408
With Hook

409
With Shackle

- Two sheave snatch block to allow for additional mechanical advantage, must be reeved with four parts of line.
- Opening feature permits easy insertion of wireline in both sheaves with removal of one bolt.
- 408 is furnished with S-4320 hook latch.
- Center Pin equipped with pressure lube fittings.
- All sizes feature sheave grooves suited for a range of wireline diameters.
- Meets or exceeds all requirements of ASME B30.26. Importantly, these blocks meet other critical performance requirements including fatigue life and material traceability, not addressed by ASME B30.26.
- Crosby's Engineered Solutions Group is ready to discuss your requirements and help select or develop the ideal block for your application. Visit thecrosbygroup.com/engineeredsolutions for more information.

408 Double Sheave Snatch Block with Hook

Working Load Limit (t)	Wire Rope Diameter (mm)	Sheave Diameter (mm)	Bearing Code	Weight Each (kg)	Stock No.	Dimensions (mm)								
						A	B	C	D	E	F	G	H	I
4 metric tons														
4	10 - 13	114	BB	8.2	104023	375	108	133	133	25	274	24	47	44
12 metric tons														
12	16 - 19	152	BB	20.4	104103	536	152	156	200	40	394	37	67	52
12	16 - 19	152	RB	20.4	104121	536	152	156	200	40	394	37	67	52
12	16 - 19	203	BB	24	104185	589	206	156	200	40	419	37	67	52
12	16 - 19	203	RB	24	104201	589	206	156	200	40	419	37	67	52

4:1 Design Factor.

409 Double Sheave Snatch Block with Shackle

Working Load Limit (t)	Wire Rope Diameter (mm)	Sheave Diameter (mm)	Bearing Code	Weight Each (kg)	Stock No.	Dimensions (mm)							
						A	B	C	D	E	F	G	H
4 metric tons													
4	10 - 13	114	BB	8.2	105022	356	108	133	285	16	43	51	44
12 metric tons													
12	16 - 19	152	BB	22.7	105102	536	152	156	416	38	79	79	52
12	16 - 19	152	RB	22.7	105120	536	152	156	416	38	79	79	52
12	16 - 19	203	BB	26.3	105184	589	206	156	441	38	79	79	52
12	16 - 19	203	RB	26.3	105200	589	206	156	441	38	79	79	52

4:1 Design Factor.

Fatigue Rated

APPLICATION AND WARNING INFORMATION
SECTION 17

Copyright © 2023 The Crosby Group LLC All Rights Reserved

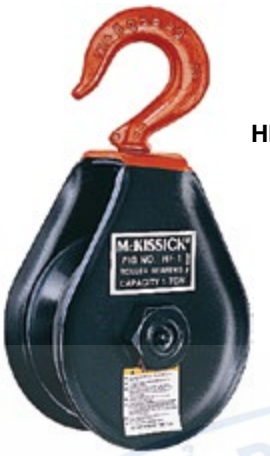

HF-1

- Hay Fork Pulleys with Swivel Hook or Swivel Eye
- Forged steel eyes and hooks.
- Available painted or zinc plated.
- One piece pressed steel shells.
- Edges well rounded to prevent chaffing of rope.
- Can be equipped with hook latch.
- Furnished with roller bearings.
- Pressure lube fittings.
- Natural Rope: Rope constructed of natural or plant based fibers, including manila, hemp, linen, cotton, coir, jute, and sisal.

HF-2

HF-1 / HF-2 Hay Fork Pulleys with Swivel Hook or Swivel Eye

Sheave Diameter (mm)	Model No.	Hay Fork Pulleys Stock No. Painted	Hay Fork Pulleys Stock No. Zinc Plated	Working Load Limit (t)	Wire Rope Diameter (mm)	Rope Type	End Fitting	Weight Each (kg)
114	HF-1	170022	170594	.91	32 MR	Natural Rope	Swivel Hook	2.72
114	HF-2	170086	170629	.91	32 MR	Natural Rope	Swivel Eye	2.72
114	HF-3	170148	170656	.91	13 WR	Wire Rope	Swivel Hook	2.72
114	HF-4	170200	170683	.91	13 WR	Wire Rope	Swivel Eye	2.72
203	HF-5	170264	-	1.81	13 WR	Wire Rope	Swivel Eye	4.99
152	HF-11	170380	-	1.81	38 MR	Natural Rope	Swivel Hook	4.99
152	HF-12	170442	-	1.81	38 MR	Natural Rope	Swivel Eye	4.99
152	HF-13	170503	-	1.81	16 WR	Wire Rope	Swivel Hook	4.99
152	HF-14	170567	-	1.81	16 WR	Wire Rope	Swivel Eye	4.99

4:1 Design Factor.

171

- Steel sheaves with roller bearings and pressure lubrication.
- Forged steel swivel eyes.
- Easy opening feature shown available in 303mm size only.

APPLICATION AND WARNING INFORMATION
SECTION 17

171 Tong Block

Sheave Diameter (mm)	Stock No.	Working Load Limit (t)	Wire Rope Diameter (mm)	Weight Each (kg)
152	171012	.45	19	4.99
203	171058	.91	19	5.44
254	171101	2.27	19	13.6
305	171156	2.27	19	15.9

4:1 Design Factor.

443

- All steel construction, steel sheaves mounted on roller bearings, grooved for maximum of 3/4" wire rope diameter.
- May be used with three parts of line if utilizing dead end becket.

443 Lay Down Block

Sheave Diameter (mm)	Stock No.	Working Load Limit (t)	Wire Rope Diameter (mm)	Weight Each (kg)
114	171414	.23	13	5.44
152	171432	.45	19	7.71

4:1 Design Factor.

Copyright © 2023 The Crosby Group LLC All Rights Reserved

Tower/Derrick Hoist Blocks

M-491

G-491

- New design provides the dependability of standard McKissick® Snatch Blocks, along with features that make it perfect for the challenging needs of Tugger Hoist and Tower Erection applications.
- Fully recessed sideplate design eliminates gap between sheave rim and sideplate, providing failsafe capture of the sheave in the case of center pin overloading.
- Sealed tapered roller bearings extend the life of the center pin and bearings, and allows for faster line speeds than recommended with standard snatch blocks.
- Holes through side plates are available for secondary block securement device.
- Suitable for hoisting personnel, contingent upon all employees, including the winch operator, being trained to follow applicable Federal, local and industry standards.
  - Tugger/Derrick applications: API RP54
  - Tower applications: OSHA directive CPL 2-1.36
- Blocks furnished with dual rated wireline sheaves.
- Forged steel swivels, tees, yokes and shackles are Quenched & Tempered.
- Sheave lubrication through center pin for easy maintenance.
- All blocks 356mm and larger are furnished with McKissick® Roll Forged sheaves with flame hardened grooves.
- Shackle fitting swivels for easy positioning.
- Manufactured by an API Q1 Certified facility.
- ABS Type Approval and Certification under 2019 Guide for Certification of Lifting Appliances and 2019 Guide for Classification of Drilling Systems.

Q&T TA

APPLICATION AND WARNING INFORMATION
SECTION 17

M-491 / G-491 Tower/Derrick Hoist Blocks

Working Load Limit (t)	Sheave Diameter (mm)	Wire Rope Diameter (mm)	M-491 Stock No. Painted	G-491 Stock No. Galvanized	Weight Each (kg)
4	203	10 - 13	2020161	2020170	16
8	254	10 - 13	2020806	2020815	25
8	254	13 - 14	2020824	2020833	25
12	254	13 - 14	2021118	2021127	25
12	356	13 - 16	2021136	2021145	43
12	356	16 - 19	2021154	2021163	43
15	406	19 - 22	2021172	2021181	68
15	406	22 - 26	2021190	2021199	48
25	457	26 - 29	2032312	2032315	118
30	508	29 - 32	2032321	2032324	306

4:1 Design Factor.

Copyright © 2023 The Crosby Group LLC All Rights Reserved

70 Series
Blocks

McKissick® Oilfield Tubing Blocks

80 Series
Blocks

- Manufactured in the USA to API-8C PSL-1 specifications with a minimum design temperature of -4°F (-20°C).
- The 70 Series has a spring loaded hook that is desirable for higher utilization and larger depths. The spring mitigates shock loadings and reduces wear on components.
- The 80 Series is not spring loaded and is desirable for shallow depths and rework.
- Utilizing the McKissick® revolutionary split nut retention system, these critical components:
  - Are precision machined and individually fitted for maximum performance.
  - Eliminate conventional threaded nut and potential problems associated with thread corrosion during regular maintenance.
- Equipped with a duplex hook for easy elevator operation which features:
  - An eight position locking mechanism and rotates on a roller thrust bearing.
  - Locking arms with self-retaining bolts to mitigate drop hazards.
  - Available with optional 35 Ton rod hook clevis.
- McKissick® API-8C sheaves are roll-forged and come equipped with flame hardened grooves for exceptional groove life.
  - Each sheave is individually lubricated from easily accessible lubrication fittings located on the center pin.
  - Equipped with double row tapered roller bearings and seals.
- The E-Z opening roll guards facilitate the fastest possible exposure of sheave cluster for quick reeving and contain no bolts to pull out and lose.
- Engineered for short overall length, extra weight, excellent balance for fast non-wobbling falls.
- Completely streamlined exterior surfaces with no unnecessary projections minimize opportunities for interference during operations.
- Contact the BS&E (Blocks, Sheaves and Engineered Solutions) team for any special requests.
- Email: specials@kitocrosby.com
- Phone: 1-800-777-1555

Fatigue Rated

APPLICATION AND WARNING INFORMATION
SECTION 17

	Standard Tubing Block Offerings							
	Series	Number of Sheaves	Block Capacity (Tons)	Sheave Diameter (in)	Nominal Wire Rope Size (in)			
					7/8	1	1-1/8	1-1/4
70 Series	72	2	75	24		■		
	73	3	75	20	■			
	73	3	125	24		■	■	
	73	3	175	30		■	■	■
	74	4	175	30	■	■	■	
80 Series	82	2	75	24	■	■		
	83	3	75	20	■	■		
	83	3	125	24		■	■	
	83	3	175	30		■	■	■
	84	4	125	24		■		
	84	4	175	30		■	■	

Copyright © 2023 The Crosby Group LLC All Rights Reserved

McKISSICK

WELL LOGGER'S BLOCKS

475

477

476

- Alloy aluminum housing for maximum strength and minimum weight.
- Extra large double row, pre-adjusted sealed tapered bearing.
- Quick opening pin for fast string-up, light weight for easy handling.

Licensed Under API Spec 8C–0021

APPLICATION AND WARNING INFORMATION
SECTION 17

475 / 477 Floor Blocks

Sheave Diameter (mm)	Model No.	Floor Block Stock No.	Working Load Limit (t)	Conductor Cable Size (mm)	Weight Each (kg)	Connection
178	475	180020	1.35	5	4.5	Swivel Hanger
254	475	180253	2.25	8	9.5	Swivel Hanger
305	475	180440	2.25	8	10.8	Swivel Hanger
356	475	180618	2.25	8	19.5	Swivel Hanger
356	477	169784	5.4	6	26.3	Swivel Clevis
508	477	191072	5.4	6	31.8	Swivel Clevis
610	477	191107	9.0	8	58.9	Swivel Clevis

4:1 Design Factor.

476 Top Blocks

Sheave Diameter (mm)	Model No.	Top Block Stock No.	Working Load Limit (t)	Conductor Cable Size (mm)	Weight Each (kg)	Connection
178	476	180075	2.25	5	4.5	Stinger Pin
254	476	180333	3.6	8	9.5	Stinger Pin
305	476	180529	3.6	8	10.8	Stinger Pin
356	476	180707	3.6	8	19.5	Stinger Pin

4:1 Design Factor.

Copyright © 2023 The Crosby Group LLC All Rights Reserved

458

Guy Line Blocks

- Used on guy lines to gain mechanical advantage through rapid take-up, taking less pull to guy down.

459

APPLICATION AND WARNING INFORMATION
SECTION 17

Guy Line Blocks

Model No.	No. of Sheaves	Stock No.	Working Load Limit (t)	Sheave Diameter (mm)	Wire Rope Diameter (mm)	Weight Each (kg)
458	1	171619	4.5	152	13	9.5
458H	1	239067	7.2	152	14-16	11.3
459	2	171637	9	152	13	12.7
459H	2	239076	10.8	152	14-16	14.1

731

Crown Blocks

- McKissick® Roll-Forged sheaves with flame hardened grooves.
- Double row pre-adjusted sealed tapered bearings mounted on a steel shaft.
- Heavy center and side plates for proper support of center pin.
- Pre-assembled units for rapid attachment to crown assembly for installation on derrick.
- On multiple sheave assemblies, one sheave can be grooved for sand line on request.
- Other sizes available upon request.
- Sheaves manufactured to API-8C specifications.

APPLICATION AND WARNING INFORMATION
SECTION 17

Crown Blocks

Sheave Diameter (mm)	Model No.	Stock No.	No. of Sheaves	Working Load Limit (t)	Wire Rope Diameter (mm)	Weight Each (kg)
610	241	351158	1	13.5	22	91
610	242	351167	2	27	22	126
610	243	351176	3	40.5	22	170
610	731	351185	1	31.5	25	91
610	732	351194	2	67.5	25	159
610	733	351201	3	90	25	238
610	734	351210	4	113	25	327
762	741	351229	1	36	28	147
762	742	351238	2	72	28	254
762	743	351247	3	99	28	363
762	744	351256	4	126	28	445
762	745	351265	5	153	28	528

Copyright © 2023 The Crosby Group LLC All Rights Reserved

Marine Blocks

McKissick® Marine Blocks offer solutions for the unique application of marine environments.

Where corrosion resistance is paramount, hot dip galvanized finishes are available as the best solution for saltwater or highly corrosive environments.

Blocks that follow have sheaves specifically grooved for certain rope types. Ensure that the correct block is specified for the type of rope being used.

rope Types:

- Wire rope: Rope constructed of metal (most commonly steel) wires, twisted into strands that are laid in a helical pattern around a core.
- Natural Rope: Rope constructed of natural or plant based fibers, including manila, hemp, linen, cotton, coir, jute, and sisal.
- Synthetic Rope: Rope constructed of Synthetic or man-made fibers including polypropylene, nylon, polyesters, polyethylene, Aramids, and acrylics.

F
Swivel Eye

G
Yoke and Swivel Shackle

HS
Reverse Eye Hook

J
Yoke and Oblong Swivel Eye

N
Loose Swivel Hook

P
Screw Pin Anchor Shackle

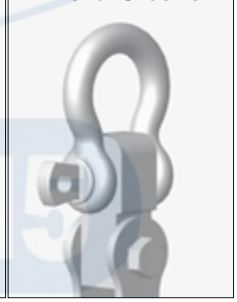

QG
Swivel Bolt Type Shackle

QK
Upset Swivel Bolt Type

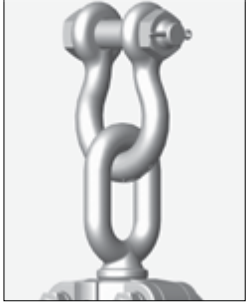

S
Round Pin Anchor Shackle

T
Swivel Hook with Latch

Copyright © 2023 The Crosby Group LLC All Rights Reserved

Regular Wood Blocks for Natural Manila Rope

HS-21-B

- Hot-dip Galvanized for corrosion resistance.
- Grade 5 bolts secured with lock washers and staked nuts.
- Bronze bushed sheaves with large bearing diameter for extended block life.
- Beckets furnished on all blocks.
- Meets or exceeds all requirements of ASME B30.26. Importantly, these blocks meet other critical performance requirements including fatigue life, impact properties and material traceability, not addressed by ASME B30.26.
- Fitting Type: HS-Latch Hook; N-Swivel Hook with Latch; S- Round Pin Anchor Shackle

21B, 22B, 23B

Block Size (in)	Fitting	Single Sheave 21 B Stock No.	Double Sheave 22 B Stock No.	Triple Sheave 23 B Stock No.
4	HS	603831	604634	605438
5	HS	603859	604652	605456
6	HS	603877	604670	605474
8	HS	603911	604714	605517
4	N	606437	606838	607230
5	N	606455	606856	607258
6	N	606473	606874	607276
8	N	606516	606918	607310
4	S	610039	611635	613232
5	S	610057	611653	613250
6	S	610075	611671	613278
8	S	610119	611715	613312

21B, 22B, 23B

Block Size (in)	Sheave Diameter	Manila Rope Size (mm)	Working Load Limit (t)			Weight Each (kg)		
			21 Single	22 Double	23 Triple	21 Single	22 Double	23 Triple
4	57.0	13	.45	.64	.82	.79	1.36	1.81
5	76.0	16	.54	.82	1.09	1.47	2.54	2.95
6	89.0	19	.82	1.13	1.45	2.27	3.86	5.22
8	121	22-26	1.27	1.72	2.18	5.90	6.35	9.75

4:1 Design Factor.

APPLICATION AND WARNING INFORMATION
SECTION 17

Steel Shell Blocks for Natural or Manila Rope

P-303B

- Hot-dip Galvanized for corrosion resistance.
- Grade 5 bolts secured with lock washers and staked nuts.
- Bronze bushed sheaves with large bearing diameter for extended block life.
- Fitting Type: HS- Latch Hook; N- Swivel Hook with Latch; P- Screw Pin Anchor Shackle

301B, 302B, 303B

Block Size (in)	Fitting	Single Sheave 301 B Stock No.	Double Sheave 302 B Stock No.	Triple Sheave 303 B Stock No.
4	HS	680971	681373	681774
6	HS	680999	681391	-
8	HS	681015	681417	681818
4	N	682639	683031	683433
6	N	682675	683077	683479
8	P	691111	692717	694314

301B, 302B, 303B

Block Size (in)	Sheave Diameter	Manila Rope Size (mm)	Working Load Limit (kg)			Weight Each (kg)		
			Single	Double	Triple	Single	Double	Triple
4	57.2	13	.50	.73	1.00	1.02	1.70	2.27
6	89.0	19	.91	1.50	1.81	2.49	4.20	5.67
8	121	26	1.50	2.31	3.18	4.54	7.48	9.98

3.5:1 Design Factor.

Copyright © 2023 The Crosby Group LLC All Rights Reserved

HS-262 Double

Loose Side Hooks with Latch for Manila Rope

- Grade 5 bolts secured with lock washers and staked nuts.
- Bronze bushed sheaves with large bearing diameter for extended block life.
- Fitting Type : HS - Latch Hook

HS-262 Double, HA-261, 262, 263

Block Size (in)	Fitting	Manila Rope Size (mm)	Sheave Diameter	261 B Stock No.	262 B Stock No.	263 B Stock No.	Working Load Limit (t)			Weight Each (kg)		
							261 Single	262 Double	263 Triple	261 Single	262 Double	263 Triple
4	HS	13	57.0	666826	666229	667228	.41	.64	.82	.63	1.46	1.47
5	HS	16	76.0	666844	666247	-	.54	.82	-	1.02	1.76	-
6	HS	19	89.0	666862	666265	-	.82	1.13	-	1.70	2.72	-
8	HS	22-26	121	666906	666309	667308	1.27	1.72	2.18	3.23	4.88	6.69

3:1 Design Factor.

APPLICATION AND WARNING INFORMATION
SECTION 17

T-350-C

Gin Blocks for Manila Rope

- For light hoisting by roofers and contractors.
- Furnished with drop forged swivel latch hooks.
- Equipped with swivel hook with latch.

APPLICATION AND WARNING INFORMATION
SECTION 17

350C, 350B, 350R

Block Size (in)	Gin Block Stock No.			Sheave Size (mm)			Manila Rope Size (mm)	Working Load Limit (t)	Weight Each (kg)
	T-350-B	T-350-R	T-350-C	Outside Diam.	Rim Thickness	Bearing Diam.			
8	710403	710207	710001	203	31.8	19.1	22	.45	4.10
10	710421	710225	710029	254	31.8	22.4	26	.45	5.45
12	710449	710243	710047	305	35.1	22.4	26	.45	7.25

3:1 Design Factor.

Bearing Code : B - Self Lubricating Bronze Bushed; R - Roller Bearing; C - Common Iron

Copyright © 2023 The Crosby Group LLC All Rights Reserved

STEEL SHELL & WOOD SHELL

T-390
Painted

T-390
Galvanized

T-385
Painted

T-385
Galvanized

- New style blocks feature higher working load limits.
- Painted or Galvanized steel with replaceable wood bumpers.
- Side plate opens for insertion of wire rope.
- Incorporates exclusive bolt retaining spring to assure no lost bolts, plus utilizes secondary retaining pin.
- Bronze bushed sheaves with large bearing diameter for extended block life.
- Utilizes Crosby "N" style hooks with integrated latch.
- Lubricated center pin.
- 10" and 12" sizes utilize steel sheaves.
- Meets or exceeds all requirements of ASME B30.26. Importantly, these blocks meet other critical performance requirements including fatigue life, impact properties and material traceability, not addressed by ASME B30.26.

APPLICATION AND WARNING INFORMATION
SECTION 17

385B, 390B Blocks

Block Size (in)	Fitting	Wood Shell 385-B Stock No. S.C.	Wood Shell 385-B Stock No. Galv.	Steel Shell 390-B Stock No. S.C.	Steel Shell 390-B Stock No. Galv.
6	T	702000	702108	702216	702324
8	T	702009	702117	702225	702333
10	T	702018	702126	702234	702342
12	T	702027	702135	702243	702351
6	J	702036	702144	702252	702360
8	J	702045	702153	702261	702369
10	J	702054	702162	702270	702378
12	J	702063	702171	702279	702387
6	G	702072	702180	702288	702396
8	G	702081	702189	702297	702405
10	G	702090	702198	702306	702414
12	G	702099	702207	702315	702423

385B, 390B Blocks

Sheave Diameter	Manila Rope Size (mm)	Working Load Limit (t)	Weight Each (kg)
76.2	19-22	1.8	3.18
102	26-29	3.6	5.90
152	32	7.3	11.3
203	38	7.3	15.4

4:1 Design Factor

Copyright © 2023 The Crosby Group LLC All Rights Reserved

McKISSICK

N-411B

Blocks for Synthetic Fiber Rope with loose swivel hooks

- These blocks are built to carry the increased loads of synthetic fiber ropes.
- Self-lubricated bronze bushed sheaves with large bearing diameter for extended block life.
- Meets or exceeds all requirements of ASME B30.26. Importantly, these blocks meet other critical performance requirements including fatigue life, impact properties and material traceability, not addressed by ASME B30.26.
- Fitting Type: S- Round Pin Anchor; N- Swivel Hook Latch

411B, 412B, 413B

Block Size (in)	Fitting	411 B Stock No.	412 B Stock No.	413 B Stock No.
4	S	755105	755301	755506
6	S	755123	755329	755524
4	N	757103	757309	757504
6	N	757121	757327	757522

411B, 412B, 413B

Block Size (in)	Fitting	Sheave Diameter	Synthetic Rope Size (mm)	Working Load Limit (t)			Weight Each (kg)		
				Single	Double	Triple	Single	Double	Triple
4	S	57.2	13	.90	1.36	1.36	1.36	1.81	2.72
6	S	89.0	19	1.36	3.18	3.63	2.83	4.54	6.35
4	N	57.2	13	.91	1.36	1.36	1.36	1.81	2.72
6	N	89.0	19	1.36	1.81	2.72	2.83	4.54	6.35

4:1 Design Factor.

APPLICATION AND WARNING INFORMATION
SECTION 17

CÔNG TY CỔ PHẦN PHÁT TRIỂN KINH TẾ ĐÔNG NAM Á
ASEAN JSC.VN
ASEAN DEVELOPMENT JOINT STOCK COMPANY
ISO 9001:2015
Since 2006

Copyright © 2023 The Crosby Group LLC All Rights Reserved

TRY NET BLOCKS

F-453 6”

F-454 6”

J-454 8”

- Forged steel swivel eyes.
- Hot-dip galvanized.
- 6" 453 - Pressed steel side plates with flared edges. Figure 8 grooved, self-lubricating bronze bushed sheaves, with pressure lube fittings. 453 has an extra wide throat opening to allow fittings to pass through.
- 6" 454 - Forged side plates designed to eliminate rope jamming. Wide throat opening and pressure lube fitting on sheave and eye fitting.
- 8" 454 - Forged steel side plates designed to eliminate possibility of rope jamming. Furnished with sealed tapered bearings. Flame-hardened forged steel sheaves for wear resistance.

APPLICATION AND WARNING INFORMATION
SECTION 17

453, 454, Blocks

Sheave Dia. and Model No.	Bearing Type	Stock No.	Working Load Limit (t)	Weight Each (kg)	Sheave Dimensions (mm)	
					Outside Diameter	Rim Thickness
6" F-453	Bronze Bushed	769886	4.54	15.9	152	70.0
6" F-454	Needle Bearing	2001763	4.54	10.4	152	70.0
8" J-454	Tapered Bearing	130726	9.07	16.3	203	73.0

4:1 Design Factor.

DOUBLE RIG TRAWL BLOCKS

J-452

Double Rig Trawl Blocks

- Steel sheave with flame hardened groove, for maximum wear under abrasive conditions.
- Double row, permanently sealed tapered roller bearings.
- Pressure lubrication throughout.
- All steel construction.
- Hot-dip Galvanized.
- Available in "J" oblong swivel eye and "F" standard swivel eye.

APPLICATION AND WARNING INFORMATION
SECTION 17

J-452 Blocks

Sheave Dia. and Model No.	Stock No.	Working Load Limit (t)	Weight Each (kg)	Sheave Dimensions (mm)	
				Outside Diam.	Rim Thickness
8" J-452	130655	9.07	21.8	203	95.5
12" J-452	130673	9.07	38.6	305	95.5
16" F-452	130682	18.14	53.0	406	95.5
18" J-452	2015467	22.50	136	457	138
22" F-452	130708	27.22	109	559	95.5

4:1 Design Factor.

Copyright © 2023 The Crosby Group LLC All Rights Reserved

McKISSICK

Marine Block Fitting Codes

QG
Swivel Bolt Type
Shackle

QK
Upset Swivel
Bolt Type

CARGO HOISTING BLOCKS

E-566
with Drilled
Swivel Eye

- Block is galvanized.
- Blocks 356mm and larger have flame-hardened roll forged sheaves that assure greater wire life.
- Roll forged sheave is fitted closely into mortise of shell so wire cannot jam between sheave and shell.
- Available for 19mm or 25mm wire.
- Block is fitted with tapered roller bearings which take both load and side thrusts and hold sheave central so it cannot chafe or wear on the sides.
- Tapered Roller bearing with neoprene seals and stainless steel center pin provide long life and trouble-free service.
- Stainless steel center pin has recessed nuts with lock washers.
- Swivel fitting has permanently sealed thrust bearing.
- Pressure lubrication fittings are standard on both center pin and swivel.
- Individually Proof Tested at 4 times Working Load or 2 times Resultant Load.
- A.B.S. recognized load test certificates are furnished.
- Cargo hoist blocks are rated by the maximum single line pull of the wire rope being used.
- Resultant Load equals 2 times single line pull. Ultimate load equals 5 times the Resultant Load.

J-566
with Oblong
Swivel Eye

APPLICATION AND WARNING INFORMATION
SECTION 17

566 Hoisting Blocks

Sheave Size (mm)	E-566 Stock No.	J-566 Stock No.	QG-566 Stock No.	QK-566 Stock No.	Single Line Pull (t)	Wire Rope Diameter (mm)	Weight Each (kg)
305	775003	775209	775806	776002	4.54	19	43.1
356	775058	775254	775450	775655	4.54	19	45.4
356	775067	775263	775469	775664	9.07	25	45.4
406	776609	776672	776681	776690	9.07	19	59
406	752956	752965	752974	752983	9.07	25	59

5:1 Design Factor based on Resultant Load. Working Load equals maximum single line pull.

Copyright © 2023 The Crosby Group LLC All Rights Reserved

HEEL AND LEAD BLOCK ADJUSTER FITTINGS
(For use with E-566 Cargo Blocks)

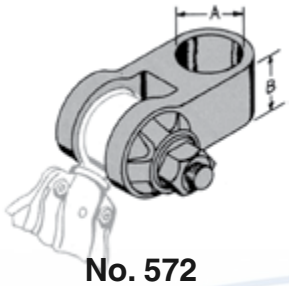

No. 572
Self-adjuster Fitting with Tension Pin, Cup Spring and Washers.

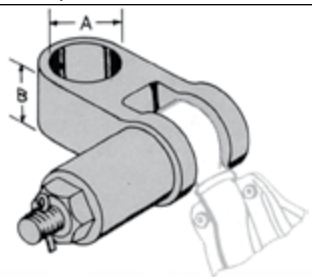

No. 573
Self-adjuster Fitting with Tension Pin, Coil Spring, Cup and Washers.

No. 574
Self-adjuster Fitting with Tension Pin, Cup Spring and Washers, and King Pin to fit Pad Eye (can also be furnished with 2 Tension Pins).

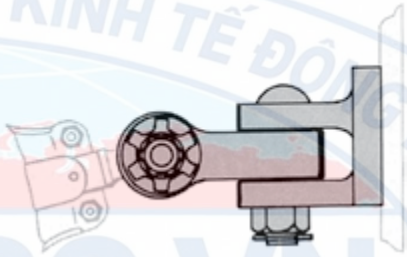

No. 576
Self-adjuster Fitting with Pad Jaw, King Pin, Tension Pin, Cup Spring and Washers.

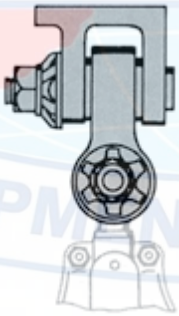

No. 575
Self-adjuster Fitting with Tension Pin, Cup Spring, and Washer.

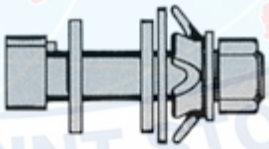

No. 571
Tension Pin with Cup Spring, Nut and Washers.

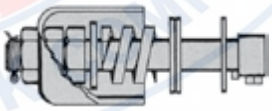

No. 570
Tension Pin with Coil Spring, Nut and Washers, Cotter and Cup.

When ordering Specify: "A" - Pin Diameter, "B" -Height of Fitting, and Tension Pin Diameter.

CÔNG TY CỔ PHẦN PHÁT TRIỂN KINH TẾ ĐÔNG NAM Á
ASEAN JSC
ASEAN DEVELOPMENT JOINT STOCK COMPANY
ISO 9001:2015
Since 2006

Copyright © 2023 The Crosby Group LLC All Rights Reserved

S-600S

Horizontal Lead Blocks

- Available painted or galvanized.
- Fitted with steel sheaves.
- Self-lubricated Bronze Bushed.

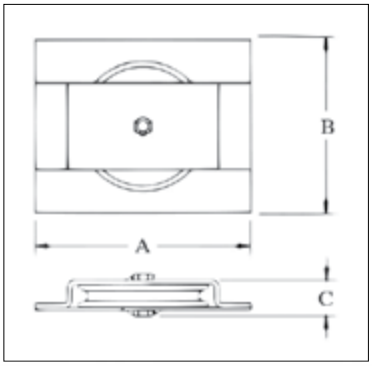

S-600S / G-600S

Sheave Diameter (mm)	600 Series Stock No.		Resultant Working Load Limit (t)	Wire Rope Diameter (mm)	Weight Each (kg)	Dimensions (mm)		
	S-600-S Painted	G-600-S Galv.				A	B	C
152	771999	772006	1.81	10	5.6	279	162	63.5
203	772015	772024	2.27	13	9.5	330	216	76.0
254	772033	772042	2.72	16	16.3	381	267	82.5
305	772051	772060	3.63	19	27.7	432	318	102
356	772079	772088	4.54	22	43.0	483	368	102

4:1 Design Factor

APPLICATION AND WARNING INFORMATION
SECTION 17

G-601S

Vertical Lead Blocks

- Available painted or galvanized.
- Fitted with steel sheaves.
- Self-lubricated Bronze Bushed.

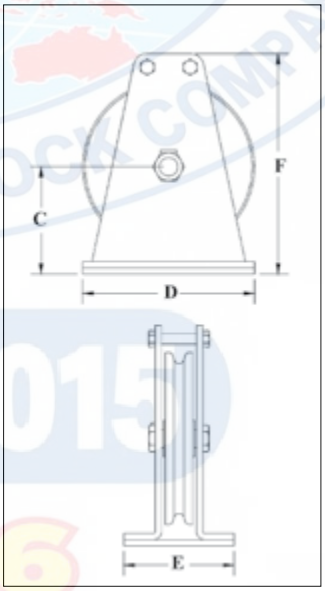

S-601S / G-601S

Sheave Diameter (mm)	601 Series Stock No.		Resultant Working Load Limit (t)	Wire Rope Diameter (mm)	Weight Each (kg)	Dimensions (mm)			
	S-601-S Painted	G-601-S Galv.				C	D	E	F
152	772195	772202	1.81	10	4.5	89	152	140	178
203	772211	772220	2.27	13	11.0	124	203	171	248
254	772239	772248	2.72	16	14.3	162	254	197	298
305	772257	772266	3.63	19	27.2	184	305	152	387
356	2003424	2003425	4.54	22	44.5	222	356	229	457

4:1 Design Factor.

Copyright © 2023 The Crosby Group LLC All Rights Reserved

G-602S

Flag Blocks

- Base plates are drilled.
- Available painted or galvanized.
- Fitted with steel sheaves.
- Self-lubricated Bronze Bushed.

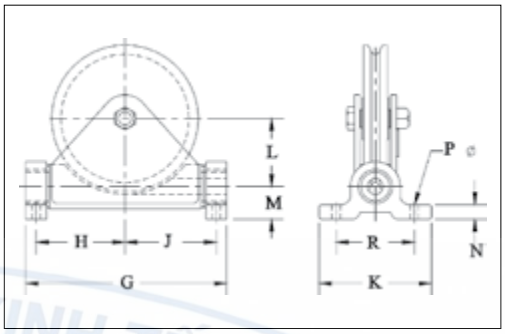

S-602S / G-602S Flag Blocks

Sheave Diameter (mm)	602 Series Stock No. S-602-S Painted	602 Series Stock No. G-602-S Galv.	Resultant Working Load Limit (t)	Wire Rope Diameter (mm)	Weight Each (kg)	Dimensions (mm) G	H	J	K	L	M	N	P	R
152	772391	772408	1.8	10	7.71	229	95.5	98.5	159	73.0	41.1	19.1	14.2	121
203	1420885	772426	2.2	13	14.3	289	121	130	178	92.0	51.0	25.4	17.5	140
254	772435	772444	2.7	16	19.1	340	145	154	178	117	51.0	25.4	17.5	140
305	772453	772462	3.6	19	52	438	184	197	273	137	79.0	35.1	20.6	191
356	772471	-	4.5	22	62	489	216	222	273	165	79.0	35.1	20.6	191

4:1 Design Factor.

APPLICATION AND WARNING INFORMATION
SECTION 17

S-603S

Hinged Lead Blocks

- Base plates are not drilled.
- Available painted or galvanized.
- Self-lubricated Bronze Bearings.

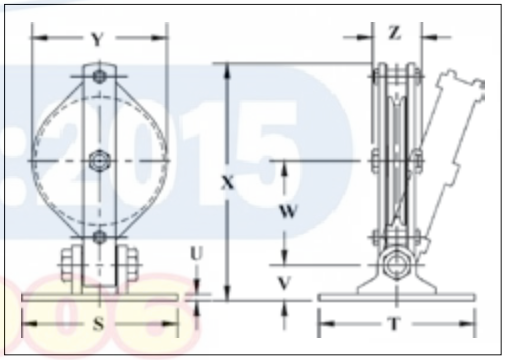

S-603S / G-603S Hinged Lead Blocks

Sheave Diameter (mm)	603 Series Stock No. S-603-S Painted	603 Series Stock No. G-603-S Galv.	Resultant Working Load Limit (t)	Wire Rope Diameter (mm)	Weight Each (kg)	Dimensions (mm) S	T	U	V	W	X	Y	Z
152	772596	772603	1.81	10	13.6	152	114	12.7	51.0	148	325	171	82.5
203	772612	772621	2.27	13	15.4	203	171	9.65	66.5	167	393	229	95.5
254	772630	772649	2.72	16	20.4	305	305	12.7	70.0	203	464	273	111
305	772658	772667	3.63	19	34.0	305	305	12.7	70.0	241	473	330	116
356	772676	772685	4.54	22	45.4	305	305	12.7	70.0	273	524	381	122

4:1 Design Factor.

Copyright © 2023 The Crosby Group LLC All Rights Reserved

McKISSICK

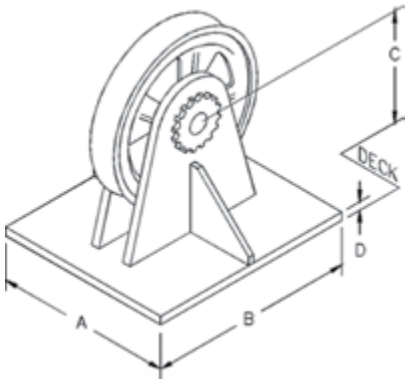

461 Vertical Lead Block

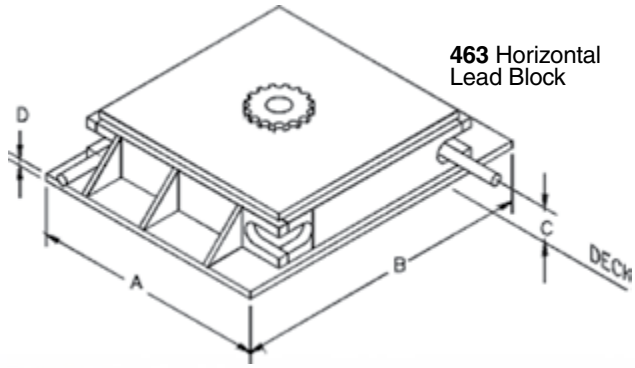

463 Horizontal Lead Block

Furnish the following important information when ordering:

- A,B and C dimensions.
- Line pull in pounds and degree of wrap.
- Line speed.
- Diameter of wire rope.
- Roller bearings, bronze bushings, or sealed double row tapered bearings.

- Guide and control your deck lines with McKissick's deck-mounted wire rope blocks. Built to your specific requirements.
- Extra heavy construction, built to withstand breaking strength of indicated rope (XIP, IWRC).
- Flame-hardened sheaves, machined grooves for proper rope size.
- For special requirements contact Crosby.

461 Vertical & 463 Horizontal Lead Blocks

Figure No.	Stock No.	Sheave Diameter (mm)	Wire Rope Diameter (mm)	Weight Each (kg)	Dimensions (mm)			
					A	B	C	D
461-18	239753	457	22	227	305	508	279	38.1
461-24	131574	610	32	227	381	660	356	38.1
461-26	238120	660	38	299	406	711	381	38.1
461-36	148389	914	42	386	508	914	495	50.8
461-40	136285	1016	50	910	584	1067	572	50.8
461-42	130753	1067	64	1814	711	1321	648	63.5
463-26	4440359	660	26	448	838	838	95.5	38.1
463-30	1404377	762	32	556	940	940	89.0	38.1
463-36	146522	914	38	862	1092	1092	89.0	38.1
463-42	1406525	1067	44	1350	1270	1270	111	51.0
463-48	131583	1219	50	1630	1397	1397	118	51.0
463-60	123164	1524	64	2900	1727	1727	146	51.0

For custom orders contact our Block Hotline, (1-800-727-1555).

ASEAN JSC.VN
ISO 9001:2015
Since 2006

Copyright © 2023 The Crosby Group LLC All Rights Reserved

OVAL PATTERN CONSTRUCTION BLOCKS

Q-681-Z

Q-682-Z

Q-683-Z

- All blocks are galvanized.
- Sheave lubricated through pressure lube fitting in center pin.
- Assembled with self lubricated bronze bushing.
- Combines weight of regular oval blocks with strength of extra heavy oval blocks.
- Assembled with bolt type anchor shackle.
- Side plates are rounded to provide additional stiffness and reduce wear and chaffing of the rope.

Q-681-Z / Q-682-Z / Q-683-Z

Block Size (in)	Stock No.Bronze Bushed Steel Sheaves		
	Q-681-Z	Q-682-Z	Q-683-Z
6	760441	760665	-
6	760452	760676	760812
8	760463	760687	760823
10	760474	760698	760834

Q-681-Z / Q-682-Z / Q-683-Z

Block Size (in)	Sheave Dimensions (mm)			Wire Rope Diameter (mm)	Working Load Limit (t)			Weight Each (kg)		
	Outside Diam.	Rim Thickness	Center Pin Dia.		Single	Double	Triple	Single	Double	Triple
6	152	25.4	19.1	10	2.70	3.63	-	6.8	12.7	14.5
6	152	25.4	19.1	13	2.70	3.63	4.50	7.3	12.7	14.5
8	203	31.8	25.4	16	3.63	5.44	-	13.2	20.4	28.1
10	254	31.8	25.4	16	3.63	6.35	7.25	17.2	27.7	36.3

4:1 Design Factor

Copyright © 2023 The Crosby Group LLC All Rights Reserved

Crosby

A NAME THAT ENCOMPASSES YEARS OF

ENGINEERING & MANUFACTURING EXCELLENCE

Whether you need a variation of a catalog item or a special designed solution for a challenging or unique application, The Crosby Group can help. By combining the experience of our technical support, research and development, engineering, and manufacturing teams, we are capable of designing and fabricating custom products for nearly any special application.

Copyright © 2023 The Crosby Group LLC All Rights Reserved

ENGINEERED SOLUTIONS

Special Request Forms

To submit a request for a custom product, please complete one of our special request forms online. Our Engineered Solutions group will review your request and follow up to discuss your project and next steps.

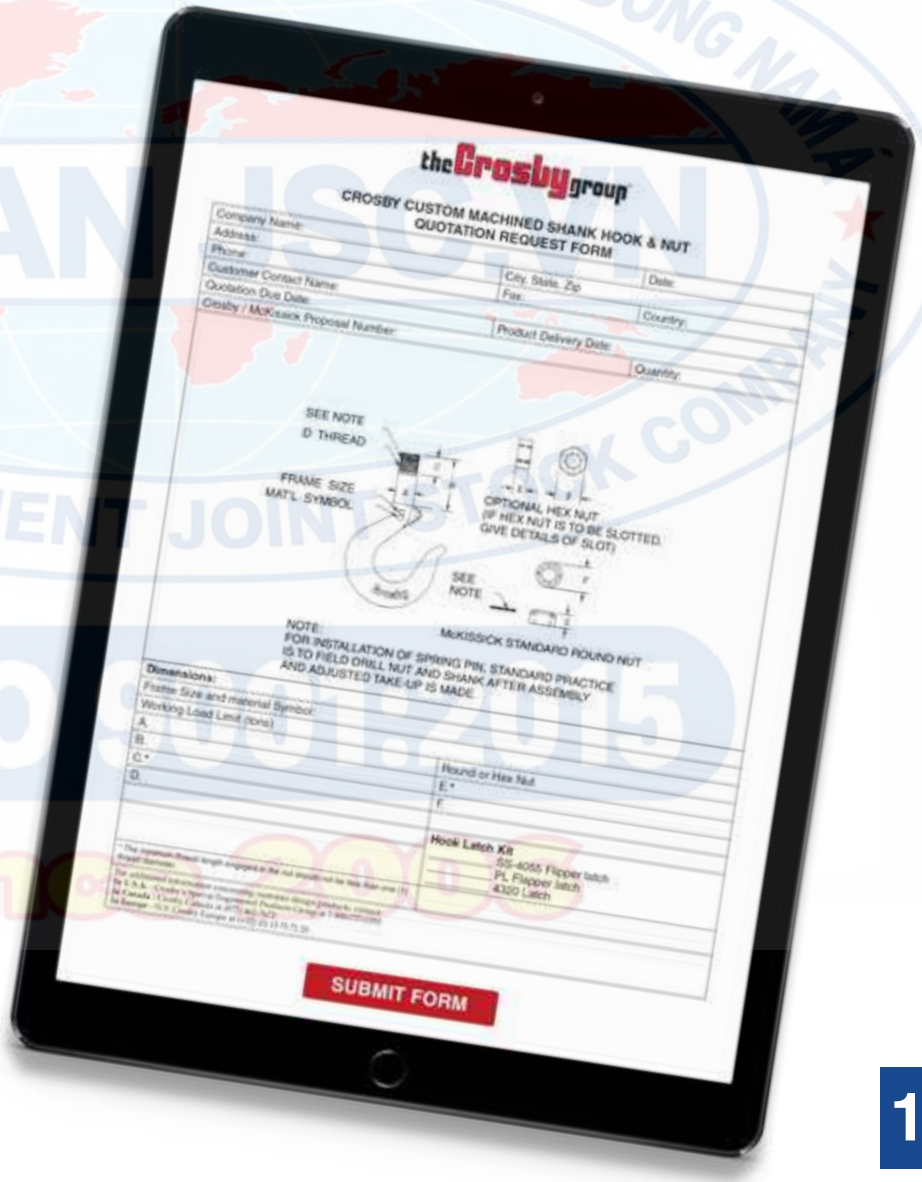

thecrosbygroup.com/engineeredsolutions

Copyright © 2023 The Crosby Group LLC All Rights Reserved

Superior sheaves to meet your most demanding applications

Every McKissick® Roll-Forged™ sheave starts as a single piece of AISI C-1035 carbon steel plate. Utilizing a time-proven proprietary roll forging process that adds extra strength to the critical groove section, the sheave is formed from a precision flame cut blank. The hub is then pressed into place with complete metal-to-metal contact and secured with a deep penetrating weld to ensure proper fit and longer life. Before the McKissick name is added, each sheave is thoroughly inspected to meet applicable industry and Crosby® quality standards.

	McKissick®	Cold-Formed Split-Steel
Smooth radius edge for better fit & less wear on rope	4	
Thicker fleet section for better support & stronger sheave groove	4	
Deep penetrating weld at hub for longer life	4	
Flame-hardened groove - Higher Rockwell C rating	35Rc	14Rc
Roll Forging process provides superior grain flow	4	

ELEMENTS OF A SUPERIOR SHEAVE

1 A smooth radius at the rim provides superior transition from outside diameter to groove, eliminating sharp corners that can damage rope. Cold-formed split-steel sheaves may contain a sharp transition radius at rim of sheave.

2 Size for size, McKissick Roll-Forged sheaves have a thicker section under the tread of the wire rope groove, providing more substantial support of the rope. Cold-formed split-steel sheaves are limited to a thinner section thickness under the groove, reducing sheave life in heavy service conditions. Thinner sections produce a sharp corner under the tread, resulting in potential stress risers.

3 Thicker web on the sheave provides required stiffness to support a stronger sheave that contains thicker flange sections. The thinner web on cold-formed split-steel sheaves, inherent to the process, does not support thicker flange sections. The sharp, pointed cutter used in forming the groove during the cold-formed split-steel process may produce a concealed crack in the bottom of the groove.

4 Heavier flange sections provide a much stronger wire rope groove and maintain proper consistent groove angles, ensuring long term wire rope performance. Cold-formed split-steel sheaves tend to have flange sections that are thinner as well as variations in thickness on the same sheave, resulting in less than desired performance during critical applications. Cold-formed split-steel sheaves are limited to a maximum flange thickness of 50% of web section.

5 Minimum 35Rc for higher hardness in the bottom of the groove results in less wear to the sheave, thus extending life of wire rope. Unless requested at time of order, cold-formed split-steel sheaves have a much lower hardness rating (approximately 14Rc). The standard material used in cold-formed split-steel process may not allow higher hardness in groove.

6 Precision alignment of hub with blank, then finished with a deep penetrating weld ensuring proper fit, longer life, and confidence during the most extreme of applications.

Additional important features: The grain flow associated with the McKissick Roll-Forged sheave process results in excellent performance properties, and each sheave is permanently marked with 'McKissick,' sheave outside diameter, wire rope size, and the Product Identification Code (PIC) to provide complete material traceability.

APPLICATIONS & WARNINGS

Read and understand these instructions before using products.

TABLE OF CONTENTS

SHACKLES ..... 362 - 366
HOOKS & SWIVELS ..... 367 - 382
CHAIN & ACCESSORIES ..... 383 - 396
WIRE ROPE END FITTINGS ..... 397 - 410
ROV ..... 411 - 412
SYNTHETIC SLING FITTINGS ..... 413 - 416
LIFTING POINTS ..... 417 - 432
LOAD SECUREMENT COMPONENTS ..... 433 - 436
BLOCKS ..... 437 - 444

Application Information

RIGGING PRACTICE SHACKLES

Screw pin shall be fully engaged. If designed for a cotter pin, it shall be used and maintained. Applied load should be centered in the bow to prevent side loading. Multiple sling legs should not be applied to the pin. If side loaded, the rated load shall be reduced according to Table 1 on the following page.

Screw Pin Shackles Pin Security

MOUSE SCREW PIN WHEN USED IN LONG-TERM OR HIGH-VIBRATION APPLICATIONS.
Mouse or Mousing (screw pin shackle) is a secondary securement method used to secure screw pin from rotation or loosening. Annealed iron wire is looped through hole in collar of pin and around adjacent leg of shackle body with wire ends securely twisted together.

Shackles

ROUND PIN
Do not side load, do not use as a collector ring, always use cotter pin.

SCREW PIN
Use when picking and placing a load, tighten pin prior to each lift.

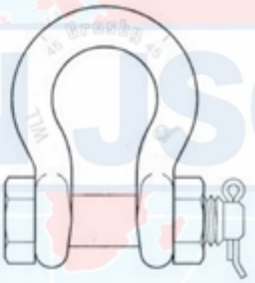

BOLT-TYPE
Use in permanent or long-term installations, always use nut and cotter.

Connection of Slings to Shackles

Diameter of shackle must be greater than wire rope diameter if no thimble in eye.

Shackle must be large enough to avoid pinching of synthetic slings.

Note that the effective width of the curved surface is only 75% of width.

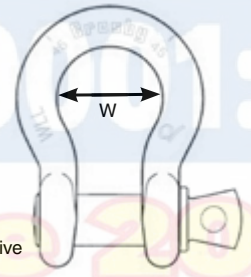

Effective Width = .75 x W

Bolt-Type Shackles

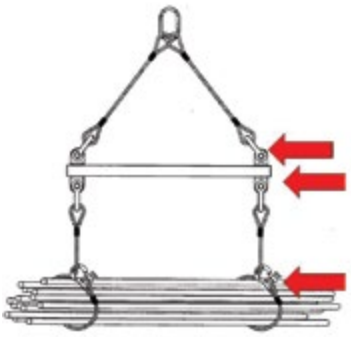

Use Bolt-Type Shackle for permanent or long-term connection.

Use Screw Pin Shackle for temporary connection.

Not necessary to tighten nut. Always use cotter pin.

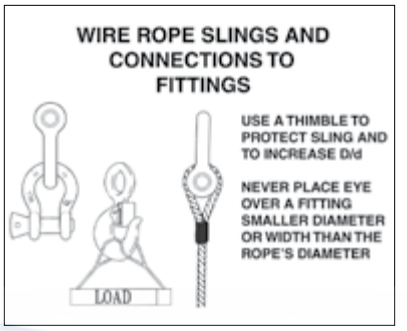

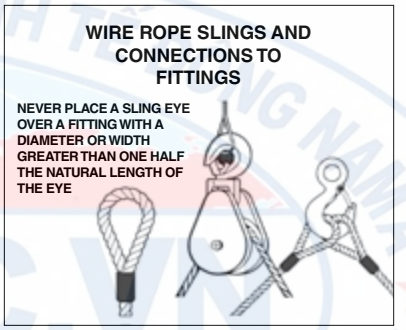

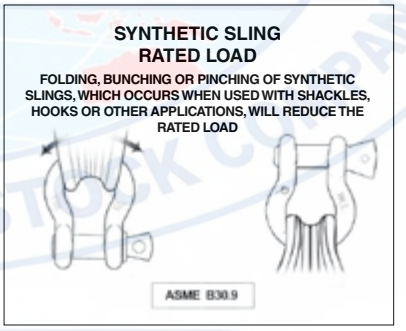

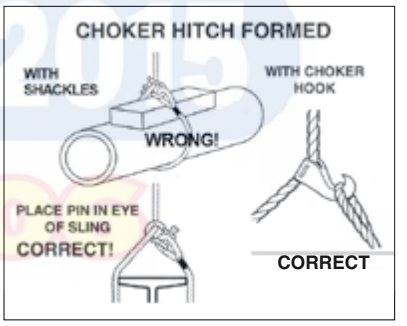

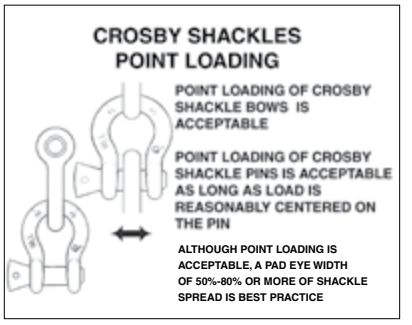

This application/warning information apply to Crosby products only.

© 2023 The Crosby Group LLC. All Rights Reserved.

Installation Guidelines

1. Extended prong cotter pins should be inserted into hole until the head is tangent to the bolt/pin, and oriented so the axis of the eye is parallel to the shank of the bolt/pin.
2. The prongs are to be bent in opposite directions around the bolt or pin as shown in Figure 1 below.
3. After installation, the cotter pin prongs should wrap around the bolt or pin by at least 60 degrees opposite directions of bolt or pin diameter.
4. The prongs may be bent with pliers or by gently tapping with a hammer. *Note: Avoid bending the prongs over sharp radii which may promote breakage. If a prong breaks off or becomes damaged during installation, replace the cotter pin.
5. The ends of the prongs may be curled to form a small loop to reduce the potential for snagging or puncture wounds.

Cotter Pin Sizes For Crosby Shackles

213 & 215 SHACKLES		2140 SHACKLES	
SHACKLE SIZE	COTTER PIN SIZE	SHACKLE SIZE	COTTER PIN SIZE
1/4”	3/32 x 3/4”	1 1/2”	5/16” x 2 1/4”
5/16”	3/32 x 1”	1 3/4”	5/16” x 2 3/4”
3/8”	1/8 x 1”	2”	3/8” x 3”
7/16”	1/8 x 1”	2 1/2”	7/16” x 4”
1/2”	1/8 x 1”	3”	3/8” x 4 1/2”
5/8”	3/16 x 1 1/4”	3 1/2”	3/8” x 4 1/2”
3/4”	3/16 x 1 1/4”	4”	3/8” x 4 1/2”
7/8”	5/16 x 1 1/2”	4 3/4”	3/8” x 7”
1”	5/16 x 1 3/4”	5”	3/8” x 8”
1 1/8”	5/16 x 1 3/4”	6”	3/8” x 8 1/2”
1 1/4”	5/16 x 2”	7”	3/8” x 10 1/2”
1 3/8”	5/16” x 2 1/4”	7 1/2”	3/8” x 10 1/2”
1 1/2”	5/16” x 2 1/4”	8”	3/8” x 13 1/2”
1 3/4”	5/16” x 2 3/4”		
2”	3/8 x 3”		

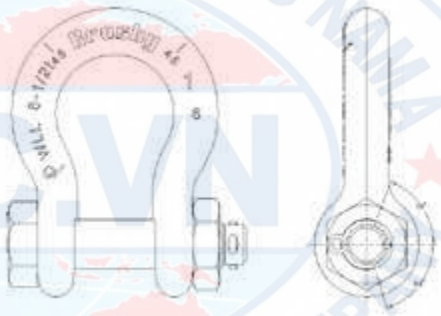

Figure 1
Cotter pin installation in a 1" bolt type shackle.

2130 & 2150 SHACKLES		2160 SHACKLES	
SHACKLE SIZE	COTTER PIN SIZE	SHACKLE WLL (t)	COTTER PIN SIZE
3/16”	3/32 x 3/4”	7	3/16” x 1 1/4”
1/4”	3/32 x 3/4”	12-1/2	1/4” x 1 3/4”
5/16”	3/32 x 1”	18	1/4” x 2”
3/8”	1/8 x 1”	30	5/16 x 2 1/4”
7/16”	1/8 x 1”	40	5/16” x 2 3/4”
1/2”	1/8 x 1”	55	3/8” x 3”
5/8”	3/16 x 1 1/4”	75	3/8” x 3”
3/4”	3/16 x 1 1/4”	125	3/8” x 4”
7/8”	1/4 x 1 1/2”	200	1/2” x 5 1/4”
1”	1/4 x 1 3/4”	300	5/8” x 6”
1 1/8”	1/4 x 1 3/4”	400	5/8” x 8”
1 1/4”	1/4 x 2”	500	3/4” x 9”
1 3/8”	5/16 x 2 1/4”	600	3/4” x 10”
1 1/2”	5/16 x 2 1/4”	700	3/4” x 11”
1 3/4”	5/16 x 2 3/4”	800	3/4 x 13” R3
2”	3/8 x 3”	900	3/4” x 13”
2 1/2”	7/16 x 4”	1000	3/4” x 14”
3”	3/8 x 4 1/2”	1250	3/4” x 15”
3 1/2”	3/8 x 4 1/2”	1500R3	3/4” x 17”
4”	3/8 x 4 1/2”	4	3/8 x 4 1/2”

© 2023 The Crosby Group LLC. All Rights Reserved.

Application Information

Point Loading of Crosby® Shackles

It has been determined that all Crosby® shackles can be point-to-point loaded to the Working Load Limit without bending of the pin/bolt. This loading can be bow-to-bow, bow-to-pin, or pin-to-pin (if there is not interference between the diameter of the shackle ears). However, caution should be given to maintain the load at the center of the span by spacers so the load will not slide over to one side, and overload that ear. See "Off Center Loading Of Crosby® Screw Pin & Bolt Type Shackles – 3/16" to 3" Sizes".

Angular Loading Of Crosby® Screw Pin & Bolt Type Shackles

Crosby® has made representative tests with smaller size shackles with the load applied at 90 degrees to the normal plane of loading (ie. in-line). The test results indicated that in order to maintain a proof load of 2 times the Working Load Limit (2 x WLL), the Working Load Limit should be reduced to 50% (ie. one-half the catalog working load rating). DO NOT SIDE LOAD G/S-213 OR G/S-215 ROUND PIN SHACKLES. Calculations based on the above test indicates the Working Load Limit should be reduced as shown below for loads applied at various angles to the normal plane of loading:

Angle loads must be applied in the plane of the bow.

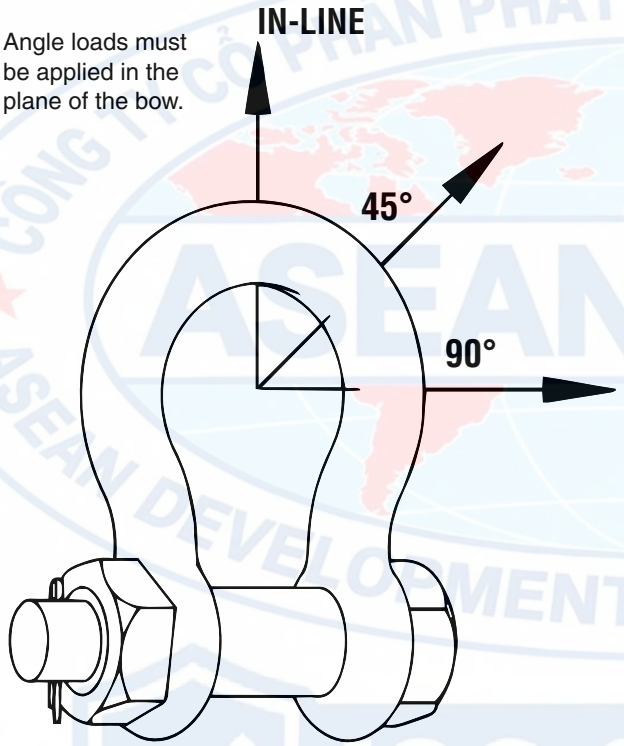

SIDE LOADED RATING REDUCTION TABLE FOR 3/16" - 3" (120 METRIC TONS)

Table 1

Side Loading Reduction Chart for Screw Pin and Bolt Type Shackles Only+

Angle of Side Load from Vertical In-Line of Shackle	Adjusted Working Load Limit
0° - 10° In-Line*	100% of Rated Working Load Limit
11°- 20° from In-Line*	85% of Rated Working Load Limit
21°- 30° from In-Line*	75% of Rated Working Load Limit
31°- 45° from In-Line*	70% of Rated Working Load Limit
46°- 55° from In-Line*	60% of Rated Working Load Limit
56°- 70° from In-Line*	55% of Rated Working Load Limit
71°- 90° from In-Line*	50% of Rated Working Load Limit

+ In-Line load is applied perpendicular to pin. *** DO NOT SIDE LOAD ROUND PIN SHACKLE.**

Table 1

SHACKLE SIZE GREATER THAN 3"
ANGLE FROM IN-LINE (DEGREES) REDUCTION IN WLL

0° - 5° In-Line*	0% of Rated Working Load Limit
6°- 10° from In-Line*	15% of Rated Working Load Limit
>10° from In-Line*	ANALYSIS REQ'D.

For shackles larger than 125 metric tons, where the angle of the side load is greater than 5 degrees, contact Crosby Engineering.

INCLUDED ANGLE - SHACKLES

Never exceed 120° included angle. Use Bolt Type and Screw Pin Shackles ONLY.

Shackles symmetrically loaded with two leg slings having a maximum included angle of 120° can be utilized to full Working Load Limit.

For shackles larger than 125 metric tons, the maximum included angle is 90 degrees for full working load limit. Contact Crosby Engineering if included angle is greater than 90 degrees.

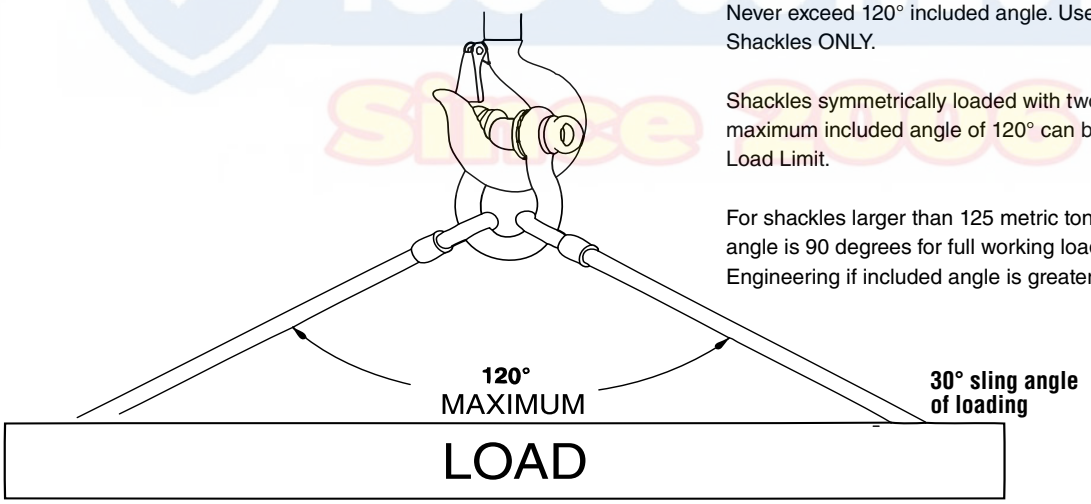

For shackles larger than 125 metric tons, the maximum included angle is 90 degrees for full working load limit. Contact Crosby Engineering if included angle is greater than 90 degrees.

This application/warning information apply to Crosby products only.

© 2023 The Crosby Group LLC. All Rights Reserved.

Application Information

Round Pin Shackles

G/S-213

G/S-215

Round Pin Shackles can be used in tie down, towing, suspension or lifting applications where the load is strictly applied in-line. Round pin shackles should never be used in rigging applications to gather multiple sling legs, or where side loading conditions may occur.

Bolt-Type Shackles

G/S-2130

G/S-2150

G/S-2140

G/S-2160

G-2140E

Screw Pin Shackles

G/S-209

S-209T

G-209A

G/S-210

S-253

G-2169

Screw Pin Shackles are used in Pick and Place* applications. For permanent or long-term installations, Crosby recommends the use of bolt type shackles.

If you choose to disregard Crosby's recommendation, the screw pin shall be secured from rotation or loosening .

Screw pin shackles can be used for applications involving side-loading circumstances. Reduced working load limits are required for side-loading applications. While in service, do not allow the screw pin to be rotated by a live line, such as a choker application.

* Pick and Place application: Pick (move) a load and place as required. Tighten screw pin before each pick.

Bolt-Type Shackles can be used in any application where round pin or screw pin shackles are used. In addition, they are recommended for permanent or long term installations and where the load may slide on the shackle pin causing the pin to rotate. The bolt-type shackle's secondary securement system, utilizing a nut and cotter, eliminates the requirement to tighten nut before each lift or movement of load.

QUIC-CHECK®

All Crosby Shackles, with the exception of 2160, 2169, 2170, 252 and 253 styles incorporate markings forged into the product that address an easy to use **QUIC-CHECK®** feature. Angle indicators are forged into the shackle bow at 45 degree** angles from vertical. These are utilized on screw pin and bolt type shackles to quickly check the approximate angle of a two-legged hitch, or quickly check the angle of a single leg hitch when the shackle pin is secured and the pull of the load is off vertical (side loaded), thus requiring a reduction in the working load limit of the shackle.

G-2130

** **Round Pin Shackles** utilize the 45 degree **QUIC-CHECK®** indicators to ensure load is applied strictly in-line.

© 2023 The Crosby Group LLC. All Rights Reserved.

Technical Information

2006/42/EC highlights the responsibility of the manufacturer, distributor and end user of lifting gear.
Gunnebo Industries shackles are specified, monitored and documented in compliance with the most stringent requirements for the product concerned. A certified ISO 9001:2008 to 9001:2015 system is an evidence of our quality standard. See website or user instructions for assembly instructions. Meets listed current specifications and standards at time of publication of this catalog.

Instructions For Safe Use

1. The user is obliged to keep a valid Test Certificate for any shackle being used in a lifting operation.
2. Before use each shackle should be inspected to ensure that:
   - all markings in the body and the pin of the shackle are legible and in compliance with the relevant Test Certificate.
   - the shackle pin is of the correct type.
   - the body and pin are not distorted or unduly worn.
   - The body and pin are free from nicks, cracks, grooves and corrosion.
   - If there is any doubt with regards to the above criteria being met, the shackle should not be used for a lifting operation.
3. It is important to ensure that the pin is safely locked after assembly. For repeated lifting between inspections of the gear, it is recommended to use a safety bolt type shackle with nut and split-pin - the user must ensure that the split-pin is fitted, to prevent the nut from unscrewing during use.
4. Incorrect seating of a pin may be due to a bent pin, damaged threads or misalignment of the holes. Do not use the shackle under these circumstances, but refer the matter to a competent person (i.e. dealer, manufacturer)
5. Shackles should be fitted to the load in a manner that allows the shackle body to take the load in a straight line along its centerline to avoid undue bending stresses which will reduce the load capacity of the shackle. When using shackles in conjunction with multi-leg slings, due consideration should be given to the effect of the angle between the sling legs. When a shackle is used to secure the top block of a set of block and tackle the load on this shackle is increased by the value of the hoisting effect.
6. To avoid eccentric loading of the shackle it is recommended to center load on pin. as far as possible over the total length of the pin or to use loose spacers.
7. Never modify, repair or reshape a shackle by welding, heating or bending as this will affect the nominal WLL.
8. Never heat treat a shackle as this may affect the WLL.

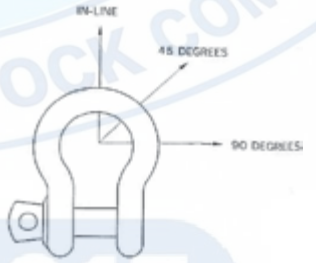

Side loads should be avoided as the products are not designed for this purpose. If side loads cannot be avoided, the following reduction factors must be taken into account:

Reduction for side loading

Load angle	New Working Load Limit
0°	100% of original WLL
45°	70% of original WLL
90°	50% of original WLL

Avoid applications where, due to load movement, the shackle pin can rotate

Shackle must be loaded in straight direction

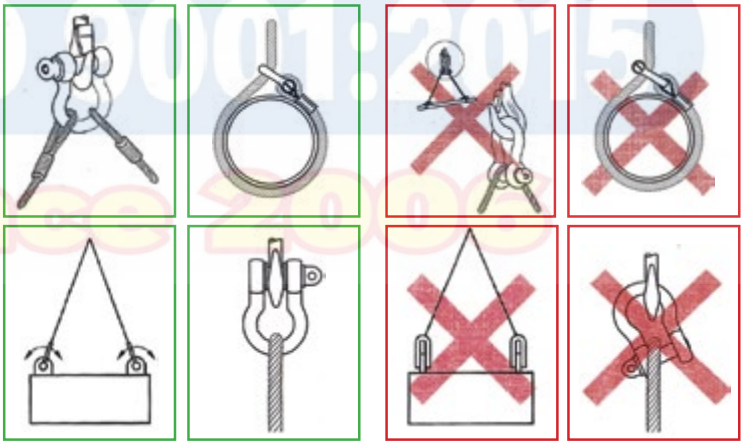

Temperature

If extreme temperature situations are applicable, the following load reductions must be taken into account.

Reduction for elevated temperatures

Temperature:	New Working Load Limit
-20 - 200° C	100% of original Working Load Limit
200 - 300° C	90% of original Working Load Limit
300 - 400° C	75% of original Working Load Limit
> 400° C	not allowed

This application/warning information apply to Gunnebo products only.

Copyright © 2023 The Crosby Group LLC All Rights Reserved

Crosby® HOIST HOOKS

WARNINGS & APPLICATION INSTRUCTIONS

S-3319 Series Positioning Only | S-319 Series | S-3316 Series | L-320N Series | L-322 Series Positioning Only | L-3322B

⚠ WARNING

- **Loads may disengage from hook if proper procedures are not followed.**
- **A falling load may cause serious injury or death.**
- **See OSHA Rule 1926.1431(g)(1)(i)(A) and 1926.1501(g)(4)(iv)(B) for personnel hoisting by cranes and derricks, and OSHA Directive CPL 2-1.36 - Interim Inspection Procedures During Communication Tower Construction Activities. A Crosby 319, L-320 or L-322 hook with a PL latch attached and secured with a bolt, nut and cotter pin (or toggle pin) may be used for lifting personnel. A Crosby 319N, L-320N or L-322N hook with an S-4320 latch attached and secured with cotter pin or bolt, nut and pin; or a PL-N latch attached and secured with toggle pin may be used for lifting personnel. A hook with a Crosby SS-4055 latch attached shall NOT be used for personnel lifting.**
- **See OSHA Directive CPL 2-1.36 - Crosby does not recommend the placement of lanyards directly into the positive locking Crosby hook when hoisting personnel. Crosby requires that all suspension systems (vertical lifelines / lanyard) shall be gathered at the positive locked load hook by use of a master link, or a bolt-type shackle secured with cotter pin.**
- **Threads may corrode and/or strip and drop the load.**
- **Remove securement nut to inspect or to replace L-322, S-3316, and S-3319 bearing washers (2).**
- **Hook must always support the load. The load must never be supported by the latch.**
- **Never apply more force than the hook's assigned Working Load Limit (WLL) rating.**
- **Read and understand these instructions before using hook.**

QUIC-CHECK® Hoist hooks incorporate markings forged into the product which address two (2) **QUIC-CHECK®** features:

1. **Deformation Indicators –** Two strategically placed marks, one just below the shank or eye and the other on the hook tip, which allows for a **QUIC-CHECK®** measurement to determine if the throat opening has changed, thus indicating abuse or overload.
2. **To check**, use a measuring device (i.e., tape measure) to measure the distance between the marks. The marks should align to either an inch or half-inch increment on the measuring device. If the measurement does not meet criteria, the hook should be inspected further for possible damage.
3. **Angle Indicators** – Indicates the maximum included angle which is allowed between two (2) sling legs in the hook. These indicators also provide the opportunity to approximate other included angles between two sling legs.

QUIC-CHECK®

IMPORTANT SAFETY INFORMATION - READ & FOLLOW

A visual periodic inspection for cracks, nicks, wear, gouges and deformation as part of a comprehensive documented inspection program, should be conducted by trained personnel in compliance with the schedule in ASME B30.10.

- For hooks used in frequent load cycles or pulsating loads, the hook and threads should be periodically inspected by Magnetic Particle or Dye Penetrant (Note: Some disassembly may be required).
- Never use a hook whose throat opening has been increased, or whose tip has been bent more than 10 degrees out of plane from the hook body, or is in any other way distorted or bent. Note: A latch will not work properly on a hook with a bent or worn tip.
- Never use a hook that is worn beyond the limits shown in Figure 1.
- Any crack in a hook is reason to take it out of service. Hooks with a nick or gouge can be repaired only by a qualified person by grinding lengthwise, following the contour of the hook, provided that the reduced dimension is within the limits shown in Figure 1. Contact Crosby Engineering to evaluate any crack.
- Never repair, alter, rework, or reshape a hook by welding, heating, burning, or bending.
- Never side load, back load, or tip load a hook.(Side loading, back loading and tip loading are conditions that damage and reduce the capacity of the hook.) (See Figure 2)
- Eye, Shank and Swivel hooks are designed to be used with wire rope or chain. Clevis hooks are design to be used with chain. Efficiency of assembly may be reduced when used with synthetic material.
- Do not swivel the L-322, S-3316, or S-3319 swivel hooks while supporting a load. These hooks are distinguishable by hex nuts and flat washers.
- The L-3322 swivel hook is designed to rotate under load. The L-3322 is distinguishable from the L-322 by use of a round nut designed to shield bearing.
- The frequency of bearing lubrication on the L-3322 depends upon frequency and period of product use as well as environmental conditions, which are contingent upon the user's good judgment.
- The use of a latch may be mandatory by regulations or safety codes; e.g., OSHA, MSHA, ANSI/ASME B30, Insurance, etc. (Note: When using latches, see instructions in "Understanding The Crosby Group Warnings" for further information.)
- Always make sure the hook supports the load (See Figure 3). The latch must never support the load (See Figure 4).
- When multileg slings are placed in the base (bowl/saddle) of the hook, the maximum included angle between sling legs shall be 90 deg. The maximum sling leg angle with respect to the hook centerline for any rigging arrangement shall be 45 degrees. A collector ring, such as a link or shackle, should be used to maintain in-line load when more than two legs are placed in a hook or for angles greater than 45 degrees with respect to hook centerline. When more than two legs are placed in the hook bunching of the legs shall be avoided.
- See ASME B30.10 "Hooks" for additional information.

Figure 1

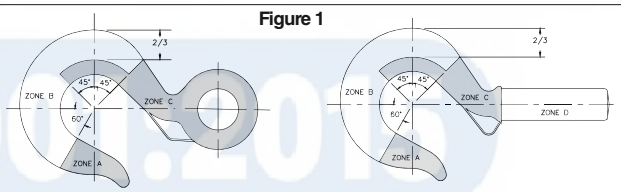

ZONE A: REPAIR NOT REQUIRED
ZONE B: 10% OF ORIGINAL DIMENSION
ZONE C: 5% OF ORIGINAL DIMENSION
ZONE: D: SEE MINIMUM THREAD SIZE CHART

Figure 2

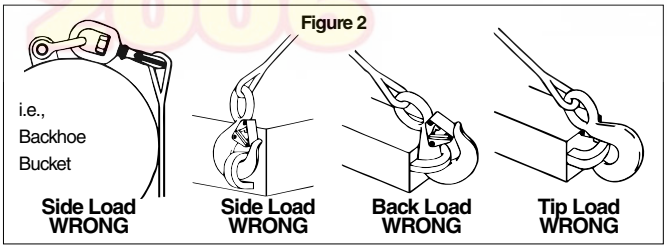

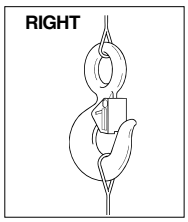

Figure 3

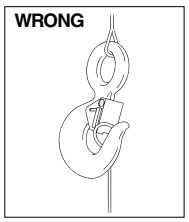

Figure 4

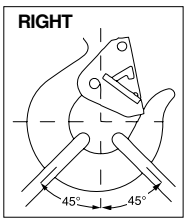

Figure 5

© 2023 The Crosby Group LLC. All Rights Reserved.

READ AND UNDERSTAND THESE INSTRUCTIONS BEFORE USING HOOKS
IMPORTANT – BASIC MACHINING AND THREAD INFORMATION

- Wrong thread and/or shank size can cause stripping and loss of load.
- The maximum diameter is the largest diameter, after cleanup, that could be expected after allowing for straightness, pits, etc.
- All threads must be Class 2 or better.
- The minimum thread length engaged in the nut should not be less than one (1) thread diameter. Install a properly sized retention device to secure the nut to the hook shank after the nut is properly adjusted at assembly. Nut retention devices such as set screws or roll pins are suitable for applications using anti-friction thrust bearings or bronze thrust washers. If the hook is intended for other applications that introduce a higher torque into the nut, a more substantial retaining device may be required.
- Hook shanks are not intended to be swaged on wire rope or rod.
- Hook shanks are not intended to be drilled (length of shank) and internally threaded.
- Crosby can not assume responsibility for, (A) the quality of machining, (B) the type of application, or (C) the means of attachment to the power source or load.
- Consult the Crosby Hook Identification & Working Load Limit Chart (See below) for the minimum thread size for assigned Working Load Limits (WLL).†
- Remove from service any Hook which has threads corroded more than 20% of the nut engaged length.

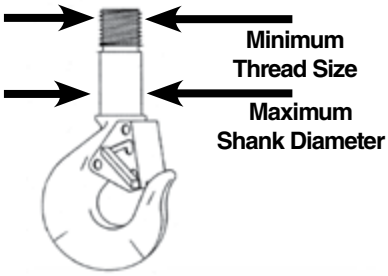

CROSBY HOOK IDENTIFICATION & WORKING LOAD LIMIT CHART†

Hook Identification			Working Load Limit (t)							Minimum Thread Size	
319C 319CN L-320C L-320CN L-322C L-322CN	319AN L-320A L-320AN L-322A L-322AN 3319 L-3322B	319BN	319C 319CN L-320C L-320CN L-322C L-322CN	319A 319AN L-320A L-320AN L-322A L-322AN L-3322B	319BN	S-3319	S-3316	Frame Size	Maximum Shank Diameter after Machining (mm)	319C 319CN (Carbon)	319A 319AN (Alloy)
DC	DA	DB	.75	1	.5	—	—	D	13.5	M12 x 1.25	M12 x 1.25
FC	FA	FB	1	1.5	.6	—	.45	F	15.7	M16 x 2	M16 x 2
GC	GA	GB	1.5	2	1	—	—	G	16.8	M16 x 2	M16 x 2
HC	HA	HB	2	3	1.4	1.63	.91	H	20.6	M18 x 1.5	M18 x 1.5
IC	IA	IB	3	*4.5 / 5	2.0	2.5	—	I	26.2	M22 x 2.5	M22 x 2.5
JC	JA	JB	5	7	3.5	4.5	—	J	32.3	M27 x 2	M27 x 2
KC	KA	KB	7.5	11	5.0	—	—	K	38.6	M30 x 1.5	M30 x 1.5
LC	LA	LB	10	15	6.5	—	—	L	44.5	M40 x 1.5	M40 x 1.5
NC	NA	NB	15	22	10	—	—	N	50.8	M50 x 1.5	M50 x 1.5
OC	OA	—	20	30	—	—	—	O	63.5	M56 x 2	M56 x 2
PC	PA	—	25	37	—	—	—	P	88.9	M70 x 1.5	M70 x 1.5
SC	SA	—	30	45	—	—	—	S	88.9	M75 x 1.5	M75 x 1.5
TC	TA	—	40	60	—	—	—	T	101.6	M85 x 2	M90 x 2
UC	UA	—	50	75	—	—	—	U	114.3	M95 x 2	M100 x 2
—	WA	—	—	100	—	—	—	W	155.4	—	M120 x 2
—	XA	—	—	150	—	—	—	X	162.1	—	M140 x 2
—	YA	—	—	200	—	—	—	Y	177.8	—	M160 x 2
—	ZA	—	—	300	—	—	—	Z	218.9	—	M190 x 2

* 319AN, L-320AN, L-3322 and L-322AN are rated at 5 tons.

† Working Load Limit - The maximum mass or force which the product is authorized to support in general service when the pull is applied in-line, unless noted otherwise, with respect to the centerline of the product. This term is used interchangeably with the following terms: 1. WLL, 2. Rated Load Value, 3. SWL, 4. Safe Working Load, 5. Resultant Safe Working Load.

Warning and Application Instructions For Crosby® Hook Latch Kit

IMPORTANT SAFETY INFORMATION - READ & FOLLOW

- Always inspect hook and latch before using.
- Never use a latch that is distorted or bent.
- Always make sure spring will force the latch against the tip of the hook.
- Always make sure hook supports the load. The latch must never support the load (See Figures 1 & 2).
- When placing two (2) sling legs in hooks, make sure the angle between the legs is less the 90° and if the hook or load is tilted, nothing bears against the bottom of this latch (See Figures 3 & 4).
- Latches are intended to retain loose sling or devices under slack conditions.
- Latches are not intended to be an anti-fouling device.

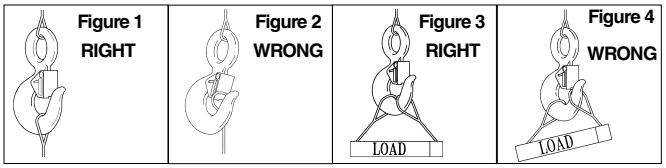

⚠ WARNING

- **Loads may disengage from hook if proper procedures are not followed.**
- **A falling load may cause serious injury or death.**
- **See OSHA Rule 1926.1431(g)(1)(i)(A) and 1926.1501(g)(4)(iv)(B) for personnel hoisting for cranes and derricks. Only a Crosby or McKissick hook with a PL Latch attached and secured with bolt, nut and cotter (or Crosby Toggle Pin) or a Crosby hook with a S-4320 Latch attached and secured with a cotter pin, or a Crosby SHUR-LOC® hook in the locked position may be used for any personnel hoisting. A hook with a Crosby SS-4055 latch attached shall NOT be used for personnel lifting.**
- **Hook must always support the load. The load must never be supported by the latch.**
- **DO NOT use this latch in applications requiring non-sparking.**
- **Read and understand these instructions before using hook and latch.**

This application/warning information apply to Crosby products only.

© 2023 The Crosby Group LLC. All Rights Reserved.

McKissick® HOIST HOOKS

WARNINGS & APPLICATION INSTRUCTIONS

L-320N Series | S-319 Series | L-322 Series Positioning Only | L-3322B Series

⚠ WARNING

- **Loads may disengage from hook if proper procedures are not followed.**
- **A falling load may cause serious injury or death.**
- **See OSHA Rule 1926.1431(g)(1)(i)(A) and 1926.1501(g)(4)(iv)(B) for personnel hoisting by cranes and derricks, and OSHA Directive CPL 2-1.36 - Interim Inspection Procedures During Communication Tower Construction Activities. A Crosby 319, L-320 or L-322 hook with a PL latch attached and secured with a bolt, nut and cotter pin (or toggle pin) may be used for lifting personnel. A Crosby 319N, L-320N or L-322N hook with an S-4320 latch attached and secured with cotter pin or bolt, nut and pin; or a PL-N latch attached and secured with toggle pin may be used for lifting personnel. A hook with a Crosby SS-4055 latch attached shall NOT be used for personnel lifting.**
- **See OSHA Directive CPL 2-1.36 - Crosby does not recommend the placement of lanyards directly into the positive locking Crosby hook when hoisting personnel. Crosby requires that all suspension systems (vertical lifelines / lanyard) shall be gathered at the positive locked load hook by use of a master link, or a bolt-type shackle secured with cotter pin.**
- **Threads or Split-Nut may corrode and/or strip and drop the load.**
- **Remove securement nut to inspect or to replace S-322 and S-3319 bearing washers (2).**
- **Hook must always support the load. The load must never be supported by the latch.**
- **Never apply more force than the hook's assigned Working Load Limit (WLL) rating.**
- **Read and understand these instructions before using hook.**

QUIC-CHECK® Hoist hooks incorporate markings forged into the product which address two (2) QUIC-CHECK® features:
Deformation Indicators - Two strategically placed marks, one just below the shank or eye and the other on the hook tip, which allows for a **QUIC-CHECK®** measurement to determine if the throat opening has changed, thus indicating abuse or overload.

QUIC-CHECK®

To check, use a measuring device (i.e., tape measure) to measure the distance between the marks. The marks should align to either an inch or half-inch increment on the measuring device. If the measurement does not meet criteria, the hook should be inspected further for possible damage.
Angle Indicators - Indicates the maximum included angle which is allowed between two (2) sling legs in the hook. These indicators also provide the opportunity to approximate other included angles between two sling legs.

IMPORTANT SAFETY INFORMATION - READ & FOLLOW

- A visual periodic inspection for cracks, nicks, wear, gouges and deformation as part of a comprehensive documented inspection program, should be conducted by trained personnel in compliance with the schedule in ASME B30.10.
- For hooks used in frequent load cycles or pulsating loads, the hook and threads should be periodically inspected by Magnetic Particle or Dye Penetrant. (Note: Some disassembly may be required.)
- Never use a hook whose throat opening has been increased, or whose tip has been bent more than 10 degrees out of plane from the hook body, or is in any other way distorted or bent.
- **Note: A latch will not work properly on a hook with a bent or worn tip.**
- Never use a hook that is worn beyond the limits shown in Figure 1.
- Any crack in a hook is reason to take it out of service. Hooks with a nick or gouge can be repaired only by a qualified person by grinding lengthwise, following the contour of the hook, provided that the reduced dimension is within the limits shown in Figure 1. Contact Crosby Engineering to evaluate any crack.
- Remove from service any hook which has threads corroded more than 20% of the nut engagement length.
- Never repair, alter, rework, or reshape a hook by welding, heating, burning, or bending.
- Never side load, back load, or tip load a hook.(Side loading, back loading and tip loading are conditions that damage and reduce the capacity of the hook.) (See Figure 2)
- Eye hooks, shank hooks and swivel hooks are designed to be used with wire rope or chain. Efficiency of assembly may be reduced when used with synthetic material.
- Do not swivel the L-322 or S-3319 swivel hooks while supporting a load. These hooks are distinguishable by hex nuts and flat washers.
- The L-3322 swivel hook is designed to rotate under load. The L-3322 is distinguishable from the L-322 by use of a round nut designed to shield bearing.
- The frequency of bearing lubrication on the L-3322 depends upon frequency and period of product use as well as environmental conditions, which are contingent upon the user's good judgment.
- The use of a latch may be mandatory by regulations or safety codes; e.g., OSHA, MSHA, ASME B30, Insurance, etc.. (Note: When using latches, see instructions in "Understanding: The Crosby Group Warnings" for further information.)
- Always make sure the hook supports the load (See Figure 3). The latch must never support the load (See Figure 4).
- When multileg slings are placed in the base (bowl/saddle) of the hook, the maximum included angle between sling legs shall be 90 deg. The maximum sling leg angle with respect to the hook centerline for any rigging arrangement shall be 45 degrees. A collector ring, such as a link or shackle, should be used to maintain in-line load when more than two legs are placed in a hook or for angles greater than 45 degrees with respect to hook centerline. When more than two legs are placed in the hook bunching of the legs shall be avoided.
- Reference Crosby's Hoist Hook Warning and Application Information for basic machining and minimum thread size.
- See ASME B30.10 "Hooks" for additional information.

Figure 1

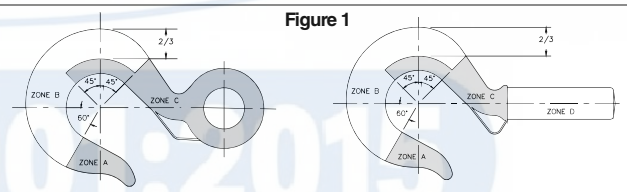

ZONE A: REPAIR NOT REQUIRED
ZONE B: 10% OF ORIGINAL DIMENSION
ZONE C: 5% OF ORIGINAL DIMENSION
ZONE: D: SEE MINIMUM THREAD SIZE CHART

Figure 2

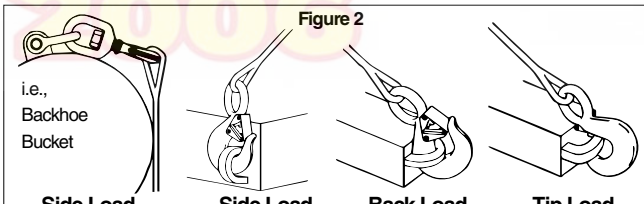

Side Load WRONG | Side Load WRONG | Back Load WRONG | Tip Load WRONG

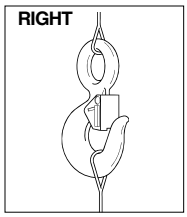

Figure 3

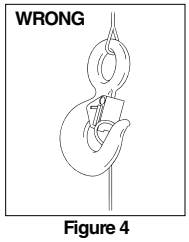

Figure 4

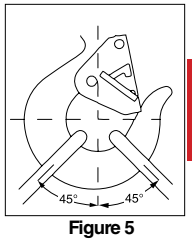

Figure 5

© 2023 The Crosby Group LLC. All Rights Reserved.

Removal of Split-Nut assembly (Reference Figure A):

- Remove vinyl cover.
- Remove spring retaining ring.
- Slide steel keeper ring off split nuts **⚠CAUTION** **Removal of keeper ring will allow split nut halves to fall from hook shank).**
- Remove split nut halves.

Inspection of split nut assembly and hook shank interface area (Reference Figure B):

- Inspect hook shank and split nut for signs of deformation on and adjacent to the load bearing surfaces.
- Inspect outside corner of hook shank load bearing surface to verify the corner is sharp.
- Verify retaining ring groove will allow proper seating of the retaining ring.
- Inspect retaining ring for corrosion or deformation. Remove from service any retaining ring that has excessive corrosion or is deformed.
- Use fine grit emery or crocus cloth to remove any corrosion from machined hook shank and split nut assembly.
- Follow inspection recommendations listed in this document under IMPORTANT SAFETY INFORMATION.
- If corrosion is present on the nut / shank interface area and deterioration or degradation of the metal components is evident, further inspection is required.
  - The use of a feeler gauge is required to properly measure the maximum allowable gap width between the split nut inside diameters and shank outside diameters.
  - With one split nut half seated against the hook shank, push the nut to one side and measure the maximum gaps as shown in Figure B. The hook should be measured in four places, 90-degrees apart.
  - Repeat above inspection procedure with other half of split nut.
  - Remove from service any hook and split nut assembly that exhibits a gap greater than 0.030".

Installation of split nut assembly (Reference Figure A):

- Coat hook shank and inside of split nut with an anti-seize compound or heavy grease.
- Install split nut halves onto shank. The flanged bottom of the split nut should be closest to the hook shoulder.
- Slide steel keeper ring over split nut halves. Verify the split nut halves properly seat against the load bearing surface of the hook shank and the steel keeper ring seats against the flange of the split nut.
- Install retaining ring onto split nut halves. Verify the retaining ring seats properly in the retaining ring groove on the outside diameter of the split nut assembly.
- Install vinyl cover over split nut and hook shank assembly.
- Verify all fasteners are correctly installed.
- Always use Genuine Crosby replacement parts.

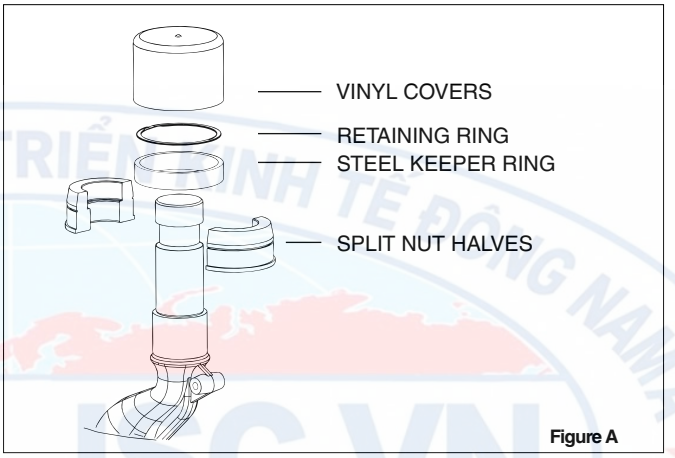

Figure A

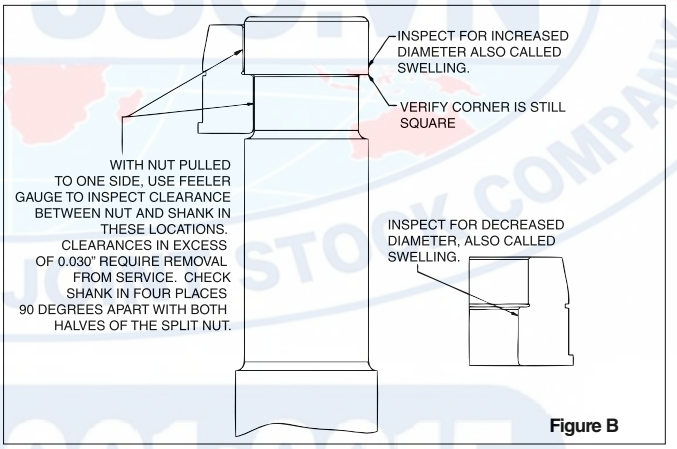

Figure B

Warning and Application Instructions For McKissick® Hook Latch Kit

IMPORTANT SAFETY INFORMATION - READ & FOLLOW

- Always inspect hook and latch before using.
- Never use a latch that is distorted or bent.
- Always make sure spring will force the latch against the tip of the hook.
- Always make sure hook supports the load. The latch must never support the load (See Figures 1 & 2).
- When placing two (2) sling legs in hooks, make sure the angle between the legs is less the 90° and if the hook or load is tilted, nothing bears against the bottom of this latch (See Figures 3 & 4).
- Latches are intended to retain loose sling or devices under slack conditions.
- Latches are not intended to be an anti-fouling device.

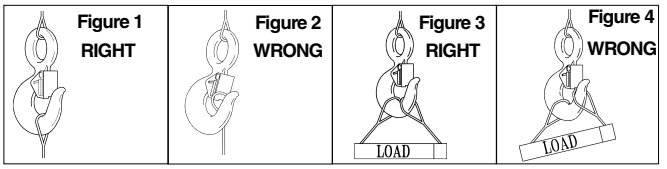

⚠ WARNING

- **Loads may disengage from hook if proper procedures are not followed.**
- **A falling load may cause serious injury or death.**
- **See OSHA Rule 1926.1431(g)(1)(i)(A) and 1926.1501(g)(4)(iv)(B) for personnel hoisting for cranes and derricks. Only a Crosby or McKissick hook with a PL Latch attached and secured with bolt, nut and cotter (or Crosby Toggle Pin) or a Crosby hook with a S-4320 Latch attached and secured with a cotter pin, or a Crosby SHUR-LOC® hook in the locked position may be used for any personnel hoisting. A hook with a Crosby SS-4055 latch attached shall NOT be used for personnel lifting.**
- **Hook must always support the load. The load must never be supported by the latch.**
- **Do not use this latch in applications requiring non-sparking.**
- **Read and understand these instructions before using hook and latch.**

This application/warning information apply to Crosby products only.

© 2023 The Crosby Group LLC. All Rights Reserved.

Crosby® / BULLARD® GOLDEN GATE® HOOKS

WARNINGS & APPLICATION INSTRUCTIONS

QUIC-CHECK® Hoist Hooks incorporate markings forged into the product which address two (2) **QUIC-CHECK®** features:
Deformation Indicators – Two strategically placed marks, one just below the shank or eye and the other on the hook tip, which allows for a **QUIC-CHECK®** measurement to determine if the throat opening has changed, thus indicating abuse or overload.

To check, use a measuring device (i.e., tape measure) to measure the distance between the marks. The marks should align to either an inch or half-inch increment on the measuring device. If the measurement does not meet criteria, the hook should be inspected further for possible damage.

Angle Indicators – Indicates the maximum included angle which is allowed between two (2) sling legs in the hook. These indicators also provide the opportunity to approximate other included angles between two sling legs.

IMPORTANT SAFETY INFORMATION - READ & FOLLOW

- A visual periodic inspection for cracks, nicks, wear, gouges and deformation as part of a comprehensive documented inspection program, should be conducted by trained personnel in compliance with the schedule in ANSI B 30.10.
- For hooks used in frequent load cycles or pulsating loads, the hook and threads should be periodically inspected by Magnetic Particle or Dye Penetrant. (Note: Some disassembly may be required.)
- See WARNING box and Figure 6 for special instructions for securing the nut to the shank at assembly.
- Never use a hook whose throat opening has been increased, or whose tip has been bent more than 10 degrees out of plane from the hook body, or is in any other way distorted or bent. **Note: A gate will not work properly on a hook with a bent or worn tip.**
- Manual - closing gates must be completely closed for the lock to work.
- Never use a hook that is worn beyond the limits shown in Figure 1.
- Remove from service any hook with a crack, nick, or gouge. Hooks with a nick or gouge shall be repaired by grinding lengthwise, following the contour of the hook, provided that the reduced dimension is within the limits shown in Figure 1. Contact Crosby Engineering to evaluate any crack.
- Never repair, alter, rework, or reshape a hook by welding, heating, burning, or bending.
- Never side load, back load, or tip load a hook. Side loading, back loading and tip loading are conditions that damage and reduce the capacity of the hook (See Figure 2).
- Eye hooks, shank hooks and swivel hooks are designed to be used with wire rope or chain. Efficiency of assembly may be reduced when used with synthetic material.

⚠ WARNING

- **Loads may disengage from hook if proper procedures are not followed.**
- **A falling load may cause serious injury or death.**
- **Before using, inspect the hook and gate daily to ensure it is in proper operating condition.**
- **Failure to properly insert the pin could result in the load falling.**
- **All Golden Gate® Hooks with threaded shanks require a pin to secure the nut to the shank. This pin prevents the nut from backing off or unscrewing from the threads and causing the load to drop.**
- **If the pin and nut are removed from the shank to replace any hook components, the pin and nut must be installed before use.**

  NOTE: 1. If a solid pin was used, the old pin "must"be discarded and a new pin inserted to secure the nut to the shank.

  2. If a spring pin (coil type) was used, it may be reused provided that the spring pin and / or the drill hole was not damaged.
- **The gate is not a load-bearing device. Do not allow the sling or other loads to bear against the gate.**
- **Threads may corrode and / or strip and drop the load.**
- **Hands, fingers and body should be kept away from the hook and load whenever possible.**
- **Never apply more force than the hook's assigned Working Load Limit (WLL) rating.**
- **Read and understand these instructions before using.**

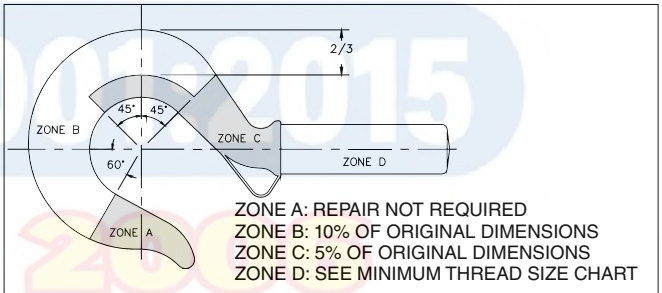

Figure 1

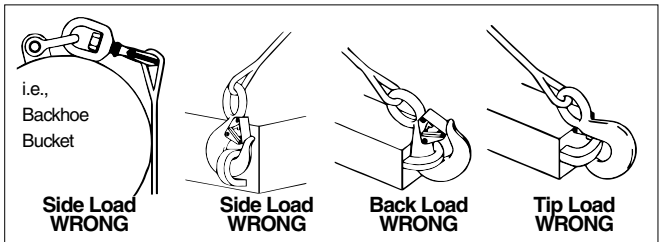

Figure 2

© 2023 The Crosby Group LLC. All Rights Reserved.

- The use of a latch may be mandatory by regulations or safety codes: e.g., OSHA, MSHA, ASME B30, Insurance etc.
- Always make sure the hook supports the load (See Figure 3). The gate must never support the load (See Figure 4).
- When multileg slings are placed in the base (bowl/saddle) of the hook, the maximum included angle between sling legs shall be 90 deg. The maximum sling leg angle with respect to the hook centerline for any rigging arrangement shall be 45 degrees. A collector ring, such as a link or shackle, should be used to maintain in-line load when more than two legs are placed in a hook or for angles greater than 45 degrees with respect to hook centerline. When more than two legs are placed in the hook bunching of the legs shall be avoided.
- See ASME B30.10 "Hooks" for additional information.
- If any of the following conditions exist, remove hook from service immediately and repair with genuine Crosby / Bullard Golden Gate® hook parts or replace the hook.
  - The gate does not lock in the closed position.
  - The gate is worn, deformed, inoperative, or fails to bridge the hook throat opening.
  - Load pins or bolts in the chain connectors are worn or bent.
- When hook is used to support a hoist, the weight of the hoist must be deducted from the assigned hook Working Load Limit.
- The rated capacity of chain connector hook assemblies must equal or exceed the capacity of the hoist.

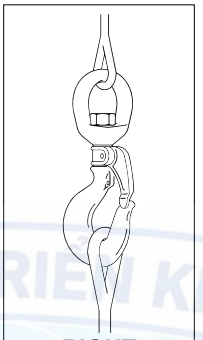

RIGHT
Figure 3

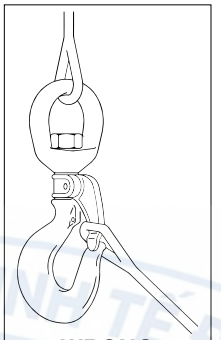

WRONG
Figure 4

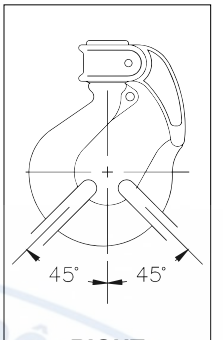

RIGHT
Figure 5

Important – Basic Machining and Thread Information – Read and Follow

- Wrong thread and/or shank size can cause stripping and loss of load.
- The maximum diameter is the largest diameter that will fit into the gate.
- All threads must be Class 2 or better.
- The minimum thread length engaged in the nut should not be less than one (1) thread diameter.
- All nuts must be secured to the shank by cross drilling the nut and threaded shank and inserting the appropriate coil type spring pin (See WARNING box and Figure 6 for special instructions).
- Coil type spring pin must be as long as the distance across the nut flats or diameter (See Figure 6).
- Consult the Crosby / Bullard Golden Gate® Hook Identification and Working Load Limit Chart (See below) for the coil type spring pin diameter.
- Remove any hook from service that requires a larger coil type spring than that shown in the chart below.
- Hook shanks are not intended to be swaged on wire rope or rod.
- Hook shanks are not intended to be drilled and internally threaded.
- Crosby cannot assume responsibility for:
  (A) the quality of machining,
  (B) the type of application, or
  (C) the means of attachment to the power source or load.

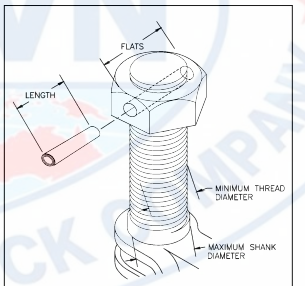

Figure 6

- Consult the Crosby/Bullard Golden Gate® Hook Identification & Working Load Limit Chart (below) for the minimum thread size for assigned Working Load Limits (WLL). +
- Remove from service any hook which has threads corroded more than 20% of the nut engaged length.

Crosby® / Bullard Golden Gate® Hook Identification and Working Load Limit Chart

Hook / Gate Size	Working Load Limit ** + (t)	Maximum Shank Diameter (mm)	Minimum Thread Size	Spring* Pin Size (mm)	Drilled Hole Size (mm)	Hook / Gate Size	Working Load Limit (t)	Maximum Shank Diameter (mm)	Minimum Thread Size	Spring* Pin Size (mm)	Drilled Hole Size (mm)
1	.45	—	—	—	—	11	8.35	38	1-1/2 - 6 UNC	7.9	7.8/8.10
2	.90	12.70	1/2 - 13 UNC	3.2	3.15/3.30	12	11.15	41.2	1-5/8 - 5-1/2 UNC	7.9	7.8/8.10
3	1.27	14.20	9/16 - 12 UNC	3.2	3.15/3.30	13	13.6	44.4	1-3/4 - 5 UNC	9.5	9.40/9.7
4	1.54	15.80	5/8 - 11 UNC	3.2	3.15/3.30	14	16.8	50.7	2 - 4-1/2 UNC	9.5	9.40/9.7
5	2.09	19.00	3/4 - 10 UNC	4.0	3.94/4.05	16	22.4	69.8	2-3/4 - 4 UNC	12.7	12.5/12.95
6	3.63	22.20	7/8 - 9 UNC	4.75	4.70/4.90	16-A	29.9	69.8	2-3/4 - 4 UNC	12.7	12.5/12.95
7	3.81	25.30	1 - 8 UNC	4.75	4.70/4.90	17	44.9	101.5	4 - 4 UNC	19.1	18.9/19.30
8	5.00	28.50	1-1/8 - 7 UNC	6.35	6.25/6.50	17-A	59.9	101.5	4 - 4 UNC	19.1	18.9/19.30
9	6.53	31.70	1-1/4 - 7 UNC	6.35	6.25/6.50	—	—	—	—	—	—

* Heavy Duty Coil Type Spring Pin.

** Minimum ultimate strength is 4 times the Working Load Limit.

\+ Working Load Limit - The maximum mass or force which the product is authorized to support in general service when the pull is applied in-line, unless noted otherwise with respect to centerline of the product. This term is used interchangeably with the following terms: 1. WLL, 2. Rated Load Value, 3. SWL, 4. Safe Working Load, 5. Resultant Safe Working Load. Ultimate Load is 4 times the Working Load.

This application/warning information apply to Crosby products only.

© 2023 The Crosby Group LLC. All Rights Reserved.

S-4320 HOOK LATCH KIT

WARNINGS & APPLICATION INSTRUCTIONS

(For Crosby 319N, 320N, and 322N, S-1327, and A-1339 Hooks)

Important Safety Information - Read & Follow

- Always inspect hook and latch before using.
- Never use a latch that is distorted or bent.
- Always make sure spring will force the latch against the tip of the hook.
- Always make sure hook supports the load. The latch must never support the load (See Figures 1 & 2).
- When placing two (2) sling legs in hook, make sure the angle between the legs is less than 90° and if the hook or load is tilted, nothing bears against the bottom of this latch (See Figures 3 & 4).
- Latches are intended to retain loose sling or devices under slack conditions.
- Latches are not intended to be an anti-fouling device.
- When using latch for personnel lifting, select proper cotter pin (See Figure 5). See Step 7 below for proper installation instructions.
  - Never reuse a bent cotter pin.
  - Never use a cotter pin with a smaller diameter or different length than recommended in Figure 5.
  - Never use a nail, a welding rod, wire, etc., in place of recommended cotter pin.
  - Always ensure cotter pin is bent so as not to interfere with sling operation.
  - Periodically inspect cotter pin for corrosion and general adequacy.

⚠ WARNING

- **Loads may disengage from hook if proper procedures are not followed.**
- **A falling load may cause serious injury or death.**
- **Hook must always support the load. The load must never be supported by the latch.**
- **See OSHA Rule 1926.1431(g)(1)(i)(A) and 1926.1501(g)(4)(iv)(B) for Personnel Hoisting by Crane or Derricks. A Crosby S-319N, S-320N, S-322N, S-1327, and A-1339 Hook with an S-4320 latch attached (when secured with cotter pin) may be used for lifting personnel.**
- **An S-4320 Latch is only to be used with a Crosby S-319N, S-320N, S-322N, S-1327, and A-1339 Hook.**
- **DO NOT use this latch in applications requiring non-sparking.**
- **Read and understand these instructions before using hook and latch.**

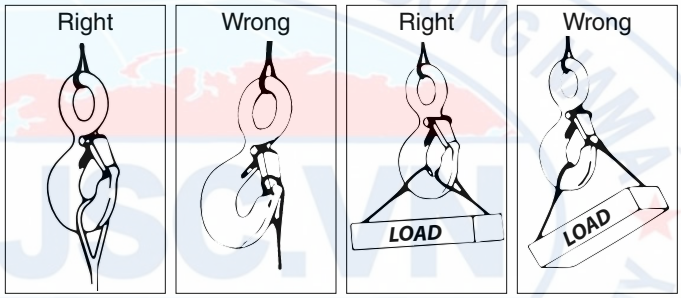

Figure 1 **Figure 2** **Figure 3** **Figure 4**

Hook Identification Code	Recommended Cotter Pin Dimensions (mm)	
	Diameter	Length
D	3.19	19.1
F	3.19	19.1
G	3.19	25.4
H	4.76	31.8
I	6.35	38.1
J	23.8	50.8
K	23.8	50.8
L	9.53	76.2
N	9.53	76.2

† The current SS-4055 latch kit and the PL latch will not fit new 319N, 320N, or 322N hooks. They will continue to be offered in both styles to service existing hooks. Important – The new S4320 latch kit will not fit the old 319, 320, or 322 hooks.

IMPORTANT – Instructions for Assembling S-4320 Latch on Crosby 320N Hooks

Step 1

1. Place hook at approximately a 45 degree angle with the cam up.

Step 2

2. Position coils of spring over cam with legs of spring pointing toward point of hook and loop of spring positioned down and lying against the hook.

Step 3

3. Position latch to side of hook points. Slide latch onto spring legs between lockplate and latch body until latch is partially over hook cam. Then depress latch and spring until latch clears point of hook.

Steps 4, 5, & 6

4. Line up holes in latch with hook cam.

5. Insert bolt through latch, spring, and cam.

6. Tighten self-locking nut on one end of bolt.

Step 7 – For Personnel Lifting

7. With latch in closed position and rigging resting in bowl of hook, insert cotter pin through hook tip and secure by bending prongs.

© 2023 The Crosby Group LLC. All Rights Reserved.

Crosby® HOOK LATCH KIT

WARNINGS & APPLICATION INSTRUCTIONS

SS-4055
(Stainless Steel)

⚠ WARNING

- **Loads may disengage from hook if proper procedures are not followed.**
- **A falling load may cause serious injury or death.**
- **See OSHA Rule 1926.1431(g)(1)(i)(A) and 1962.1501(g)(4)(iv)(B) A hook and this style latch must not be used for lifting personnel.**
- **Hook must always support the load. The load must never be supported by the latch.**
- **Read and understand these instructions before using hook and latch.**

IMPORTANT SAFETY INFORMATION - READ & FOLLOW

- Always inspect hook and latch before using.
- Never use a latch that is distorted or bent.
- Always make sure spring will force the latch against the tip of the hook.
- Always make sure hook supports the load. The latch must never support the load (See Figures 1 & 2).
- When placing two (2) sling legs in hook, make sure the angle between legs is small enough and the legs are not tilted so that nothing bears against the bottom of the latch (See Figures 3 & 4).
- Latches are intended to retain loose sling or devices under slack conditions.
- Latches are not intended to be an anti-fouling device.

RIGHT

Figure 1

WRONG

Figure 2

RIGHT

Figure 3

WRONG

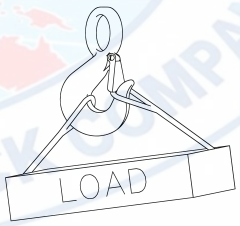

Figure 4

IMPORTANT – Instructions for Assembling Model SS-4055 Latch on Crosby Hooks

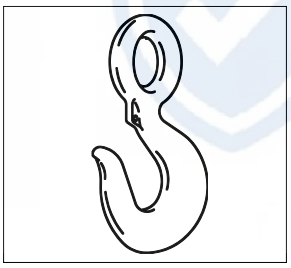

Step 1

1. Place hook at approximately a 45 degree angle with the cam up.

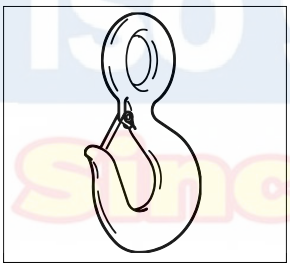

Step 2

2. Position coils of spring over cam with tines of spring pointing toward point of hook and loop of spring positioned down and lying against the hook.

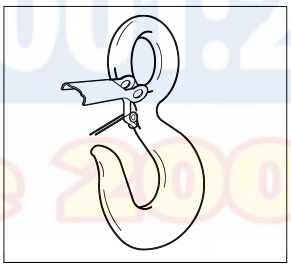

Step 3

3. Position latch over tines of spring with ears partially over hook cam. Swing latch to one side of hook, point and depress latch and spring until latch clears point of hook.

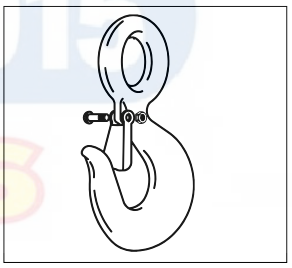

Steps 4, 5, & 6

4. Line up holes in latch with hook cam.
5. Insert bolt through latch, spring, and cam.
6. Tighten self-locking nut on one end of bolt.

This application/warning information apply to Crosby products only.

© 2023 The Crosby Group LLC. All Rights Reserved.

Crosby® MODEL PL HOOK LATCH KIT

WARNINGS & APPLICATION INSTRUCTIONS

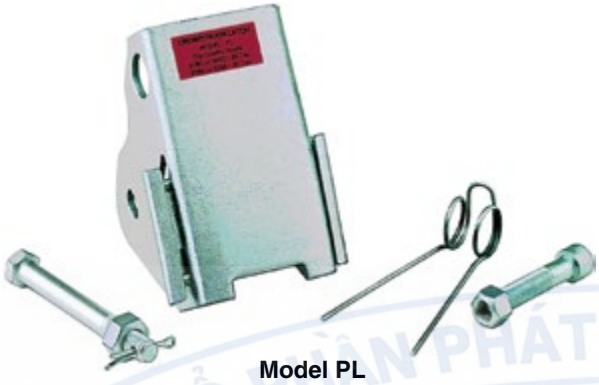

Model PL

IMPORTANT SAFETY INFORMATION - READ & FOLLOW

(Pat. USA & Canada)

- Always inspect hook and latch before using.
- Never use a latch that is distorted or bent.
- Always make sure spring will force the latch against the tip of the hook.
- Always make sure hook supports the load. The latch must never support the load (See Figures 1 & 2).
- When placing two (2) sling legs in hook, make sure the angle between the legs is less than 90° and if the hook or load is tilted, nothing bears against the bottom of this latch (See Figures 3 & 4).
- Latches are intended to retain loose sling or devices under slack conditions.
- Latches are not intended to be an anti-fouling device.

⚠ WARNING

- **Loads may disengage from hook if proper procedures are not followed.**
- **A falling load may cause serious injury or death.**
- **See OSHA Rule 1926.1431(g)(1)(i)(A) and 1926.1501(g)(4)(iv)(B) for Personnel Hoisting by Cranes or Derricks. A Crosby or McKissick Hook with a positive Locked PL or S-4320 Latch may be used to Lift Personnel.**
- **Hook must always support the load. The load must never be supported by the latch.**
- **DO NOT use this latch in applications requiring non-sparking.**
- **Read and understand these instructions before using hook and latch.**

Right

Figure 1

Wrong

Figure 2

Right

Figure 3

Wrong

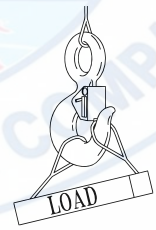

Figure 4

IMPORTANT - Instructions for Assembling Model PL Latch on Crosby or McKissick Hooks

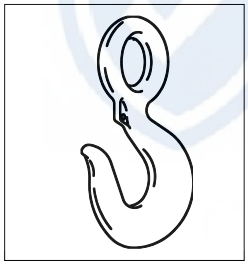

Step 1

1. Place hook at approximately a 45 degree angle with the cam up.

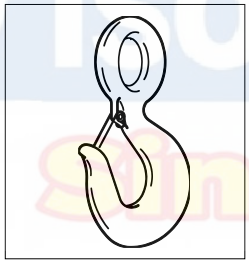

Step 2

2. Position coils of spring over cam with legs of spring pointing toward point of hook and loop of spring positioned down and lying against the hook.

Step 3

3. Position latch to side of hook points. Slide latch onto spring legs between lockplate and latch body until latch is partially over hook cam. Then depress latch and spring until latch clears point of hook.

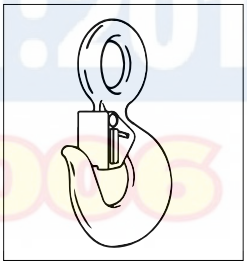

Steps 4, 5, & 6

4. Line up holes in latch with hook cam.
5. Insert bolt through latch, spring, and cam.
6. Tighten self-locking nut on one end of bolt.

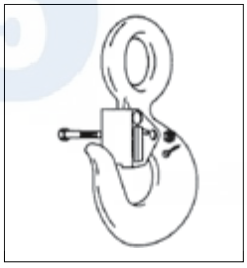

Step 7 — For Personnel Lifting

7. With latch in closed position and rigging resting in bowl of hook, insert bolt through latch and secure with nut and cotter pin. When bolt, nut and cotter pin are not being used, store them in a designated place upon the personnel platform.

© 2023 The Crosby Group LLC. All Rights Reserved.

Crosby® MODEL PL-N/O HOOK LATCH KIT

WARNINGS & APPLICATION INSTRUCTIONS

Model PL-N/O

IMPORTANT SAFETY INFORMATION - READ & FOLLOW

- Always inspect hook and latch before using.
- Never use a latch that is distorted or bent.
- Always make sure spring will force the latch against the tip of the hook.
- Always make sure hook supports the load. The latch must never support the load (See Figures 1 & 2).
- When placing two (2) sling legs in hook, make sure the angle between the legs is less than 90° and if the hook or load is tilted, nothing bears against the bottom of this latch (See Figures 3 & 4).
- Latches are intended to retain loose sling or devices under slack conditions.
- Latches are not intended to be an anti-fouling device.

⚠ WARNING

- **Loads may disengage from hook if proper procedures are not followed.**
- **A falling load may cause serious injury or death.**
- **See OSHA Rule 1926.1431(g)(1)(i)(A) and 1926.1501(g)(4)(iv)(B) for Personnel Hoisting by Crane or Derricks. A Crosby or McKissick Hook with a Positive Locked PL-N/O or S-4320 Latch may be used to lift personnel.**
- **Hook must always support the load. The load must never be supported by the latch.**
- **DO NOT use this latch in applications requiring non-sparking.**
- **Read and understand these instructions before using hook and latch.**

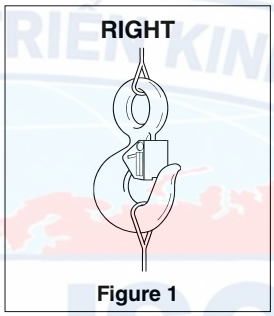

Figure 1

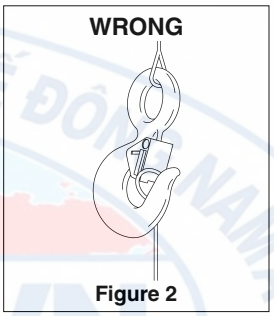

Figure 2

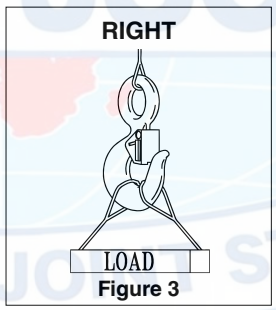

Figure 3

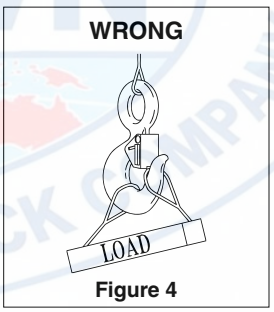

Figure 4

IMPORTANT - Instructions for Assembling Model PL-N/O Latch on Crosby or McKissick Hooks

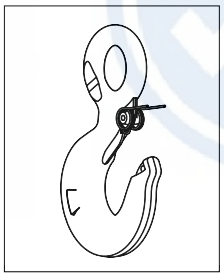

Step 1

1. Place hook in upright position. Position coils of spring over cam with legs of spring pointing toward tip of hook, and loop of spring positioned down and lying against the hook.

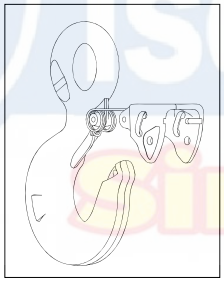

Step 2

2. Slip the latch over the spring until the two spring legs are positioned into the grooves located on the inside of the latch housing (legs of spring should fit between the gate and the housing).

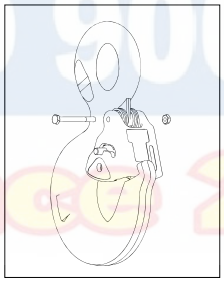

Step 3 4, 5, & 6

3. Slide latch housing up the spring legs until latch clears hook tip.

4. Resting latch on interlocking hook tip, line up holes in latch with hook cam.

5. Insert bolt through latch spring & cam.

6. Tighten self-locking nut on one end of bolt.

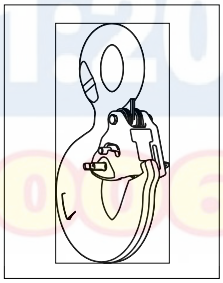

Step 7,8 - For Personnel Lifting

7. Rigging should be resting in bowl of hook, with latch in closed position and gate locked.

8. Insert toggle lock pin through hole and depress spring until toggle clears hole on other side of latch.

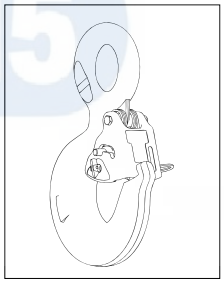

Step 9 - For Personnel Lifting

9. Rotate toggle 90 degrees to secure pin (ensure toggle is in closed position as shown).

This application/warning information apply to Crosby products only.

© 2023 The Crosby Group LLC. All Rights Reserved.

Crosby® SHUR-LOC® HOOKS

WARNING & APPLICATION INSTRUCTIONS

Important Safety Information - Read and Follow

- A visual periodic inspection for cracks, nicks, wear, gouges and deformation as part of a comprehensive documented inspection program, should be conducted by trained personnel in compliance with the schedule in ASME B30.10.
- For hooks used in frequent load cycles, pulsating loads, or severe duty as defined by ASME B30.10, the hook and threads should be periodically inspected by Magnetic Particle or Dye Penetrant (Note: Some disassembly may be required).
- Never use a hook whose throat opening has been increased 5%, not to exceed 1/4",(6mm) or shows any visible apparent bend or twist from the plane of the unbent hook, or is in any other way distorted or bent. **NOTE: A latch will not work properly on a hook with a bent or worn tip.**
- Never use a hook that is worn beyond the limits shown in Figure 1.
- Remove from service any hook with a crack, nick, or gouge. Hooks with a nick, or gouge shall be repaired by grinding lengthwise, following the contour of the hook, provided that the reduced dimension is within the limits shown in Figure 1. Contact Crosby Engineering to evaluate any crack.
- Never repair, alter, rework, or reshape a hook by welding, heating, burning, or bending.
- Never side load, back load or tip load a hook. Side loading, back loading and tip loading are conditions that damage and reduce the capacity of the hook (See Figure 2).
- S-1326A can be used for limited rotations under load (infrequent, noncontinuous).
- Efficiency of synthetic sling material may be reduced when used in eye or bowl of hook.
- Always make sure the hook supports the load (See Figure 3).

Do not use hook tip for lifting (See Figure 4).

⚠WARNING

- **Loads may disengage from hook if proper procedures are not followed.**
- **A falling load may cause serious injury or death.**
- **Positive locking latch will unlock when trigger is depressed. Never use hook unless hook and latch are fully closed and locked.**
- **Keep body parts clear of pinch point between hook tip and hook latch when closing.**
- **Keep hand(s) from between throat of hook and sling or other device.**
- **Do not use hook tip for lifting.**
- **Do not use hook handle for lifiting.**
- **Do not rig the finger pull open, place objects in the finger pull area, or in any way inhibit complete and full operation of the finger pull mechanism.**
- **Shank threads may corrode and/or strip and drop the load.**
- **Remove securement nut to inspect threads for corrosion or to replace S-1326A bearing washers (2) and or S-13326 thrust bearing.**
- **Never apply more force than the hook's assigned Working Load Limit (WLL) rating.**
- **See OSHA Rule 1926.1431(g) and 1926.1501(g) for personnel hoisting by cranes or derricks. A Crosby 1318A, 1326A, 13326, 1316A, or 1317A hook may be used for lifting personnel.**
- **Use only genuine Crosby parts as replacements.**
- **Read and understand these instructions before using hook.**

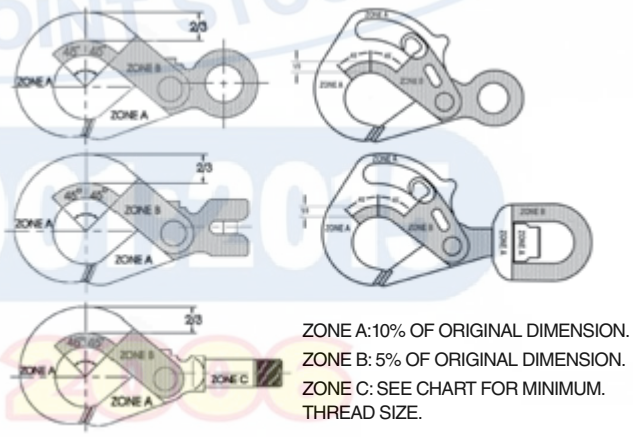

FIGURE 1

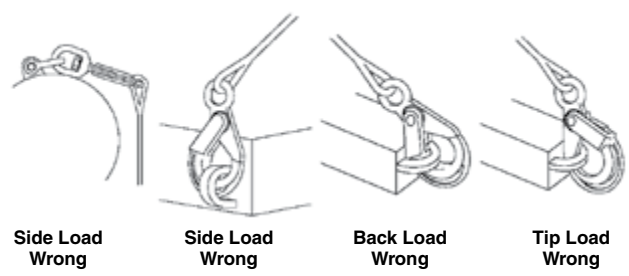

FIGURE 2

© 2023 The Crosby Group LLC. All Rights Reserved.

- When placing two (2) sling legs in hook, make sure the angle from vertical to the leg nearest the hook tip is not greater than 45 degrees, and the included angle between the legs does not exceed 90 degrees* (See Figure 5).
- See ASME B30.10 "Hooks" for additional information.

*For two legged slings with angles greater than 90°, use an intermediate link such as a master link or bolt type shackle to collect the legs of the slings. The intermediate link can then be placed over the hook to provide an en línea load on the hook. This approach must also be used when using slings with three or more legs.

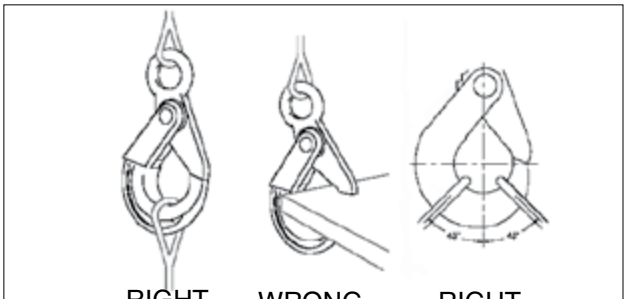

RIGHT **FIGURE 3** WRONG **FIGURE 4** RIGHT **FIGURE 5**

Important Basic Machining and Thread Information: Read and Follow

- Wrong thread and/or shank size can cause stripping and loss of load.
- The maximum diameter is the largest diameter, after cleanup, that could be expected after allowing for straightness, pits, etc.
- All threads must be Class 2 or better.
- The minimum thread length engaged in the nut should not be less than one (1) thread diameter.
- Hook shanks are not intended to be swaged on wire rope or rod.
- Hook shanks are not intended to be drilled (length of shank) and internally threaded.
- Crosby cannot assume responsibility for, (A) the quality of machining, (B) the type of application, or (C) the means of attachment to the power source or load.
- Consult the Crosby Hook Identification & Working Load Limit Chart (See below) for the minimum thread size for assigned Working Load Limits (WLL).†
- Remove from service any Hook which has threads corroded more than 20% of the nut engaged length.

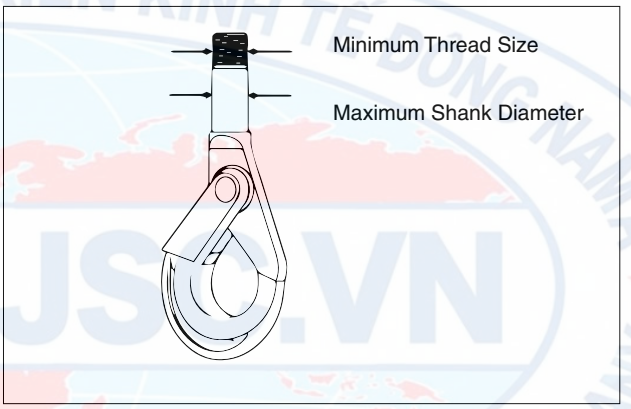

Crosby® Hook Identification & Working Load Limit Chart †

S-1316A & S-1317A Only Grade 100 Chain			S-1318A, S-1326A, S-13326						S-1318A Only		
Chain Size		Working Load Limit (t)** 4:1	Grade 100 Chain Chain Size		Working Load Limit (t)** 4:1	Wire Rope XXIP Mechanical Splice Wire Rope Size (mm)		Working Load Limit (t)* 5:1	Maximum Shank Diameter		Minimum Thread Size (in)
(mm)	(in)		(mm)	(in)		(mm)	(in)		(mm)	(in)	
6	—	1.45	6	—	1.45	8	5/16	1.00	18	.72	5/8 - 11 UNC
7	1/4	1.95	7 - 8	1/4	1.95	11	3/8	1.91	24	.94	5/8 - 11 UNC
8	5/16	2.60	8	5/16	2.59	11	1/2	1.91	24	.94	3/4 - 10 UNC
10	3/8	4.00	10	3/8	3.99	13	5/8	3.90	27	1.06	3/4 - 10 UNC
13	1/2	6.80	13	1/2	7	16	3/4	5.62	30	1.19	1-1/8 - 7 UNC
16	5/8	10.3	16	5/8	10	22	7/8	7.53	35	1.38	1-3/8 - 6 UNC
18/20	3/4	16.0	18-20	3/4	16	26	1	9.98	—	—	—
22	7/8	19.4	22	7/8	19	29	1-1/8	12.02	—	—	—
26	1	27.1	26	1	27	32	1-1/4	14.74	—	—	—

* Ultimate Load is 5 times the Working Load Limit based on XXIP Wire Rope.

** Ultimate Load is 4 times the Working Load Limit based on Grade 100 Chain.

† Working Load Limit - The maximum mass of force which the product is authorized to support in general service when the pull is applied in-line, unless noted otherwise, with respect to the centerline of the product. This term is used interchangeably with the following terms: 1. WLL, 2. Rated Load Value, 3. SWL, 4. Safe Working Load, 5. Resultant Safe Working Load. † † Based on minimum thread size for assigned WLL.

This application/warning information apply to Crosby products only.

© 2023 The Crosby Group LLC. All Rights Reserved.

Technical Information

The following information aims to give advice and explain the most common questions in order to ensure safe and proper use of lifting equipment.

It is of the utmost importance that this information is known to the user, and in accordance with the Machinery Directive 2006/42/EC this information must be delivered to the customer.

See website or user instructions for assembly instructions.

Meets listed current specifications and standards at time of publication of this catalog.

All G80 and G100 Alloy Chains, and Alloy components meet or exceed the safety standards as prescribed by ASME B30.9 and OSHA 1910-184 for slings. Always comply with applicable International, National, Federal and local regulations as they govern worksite activity. Understand all governing laws and safety standards before any products are used. Contact your International, National, Federal and local standards and regulations organizations for reference assistance.

Extreme Environments

The in-service temperature affects the WLL as follows:

Temperature (°C)	Reduction of WLL			
	Gunnebo Grade 10 (400) chain	Crosby Grade 10 & Gunnebo Grade 10 (200) chain	Crosby & Gunnebo Grade 10 components	Crosby & Gunnebo Grade 8 chain & components
-40 to +200 °C	0 %	0 %	0 %	0 %
+200 to +300 °C	10 %	Not allowed	10 %	10 %
+300 to +400 °C	25 %	Not allowed	25 %	25 %

Upon return to normal temperature, the sling reverts to its full capacity within the above temperature range. Chain slings should not be used above or below these temperatures. Note: A chain sling with Grade 10 (100) chain must not be used in temperatures above 200°C.

- Chain and components must not be used in alkaline (>pH10) or acidic conditions (<pH6).
- Comprehensive and regular examination must be carried out when used in severe or corrosive inducing environments.
- In uncertain situations consult your Gunnebo Industries dealer.

Surface Treatment

Note: Hot-dip galvanizing or plating is not allowed outside the control of the manufacturer.

Protect Yourself and Others

- Before each use the chain sling should be checked for obvious damage or deterioration.
- Know the weight of the load, the center of gravity and ensure it is ready to move and no obstacles will obstruct the lift.
- Check the conformity of the load with the WLL of the ID tag for the specific working configuration. Never use a sling without a legible valid ID tag!
- Prepare the landing site.
- Never overload a sling and avoid shock loading.
- Never use an improper sling configuration.
- Never use a worn out or damaged sling.
- Never ride on the load.
- Never walk or stand under a suspended load.
- Take into consideration that the load may swing or rotate.
- Watch your feet and fingers while loading/unloading.
- Always ensure that your back is clear.

General Advice

- Ensure that the sling is precisely as ordered.
- Ensure that the manufacturers certificate is in order.
- A metal I.D. Tag must always be attached to a chain sling, showing serial number, size, reach, rated capacity at angle of lift and manufacturer.
- Ensure that all details of the chain sling are recorded.
- Ensure that the staff using the chain sling has received the appropriate information and training.

Asymmetrical Loading Conditions

For unequally loaded chain legs we recommend that the WLL are determined as follows:

- 2-leg slings calculated as the corresponding 1-leg sling
- 3 and 4-leg slings calculated as the corresponding 1-leg sling. (If it is certain that 2-legs are equally carrying the major part of the load, it can be calculated as the corresponding 2-leg sling.)

© 2023 The Crosby Group LLC. All Rights Reserved.

Correct Use

Machining and threading specifications for BKT shank hook

- BKT self-locking hook shank machining limits are defined and are given in TABLE 2 and these limits are required for WLL's given. Failure to comply can result in stripped threads and loss of load. Hook shank threads shall end with a thread relief. Hook shank shall not be swaged to wire rope or rod. Hook shank shall not be drilled and internally threaded.
- Gunnebo Industries cannot assume responsibility for:
  1. Machining quality,
  2. Application,
  3. Attachment to power source or load

Table 2a

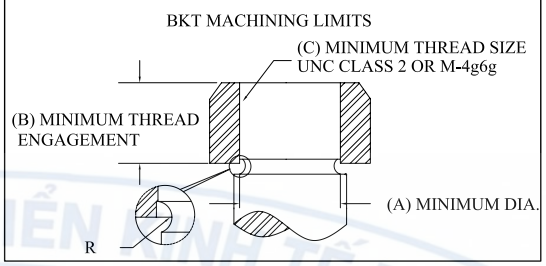

Table 2b				
English				
Trade Size		(A)	(B)	(C) Min. Thread
MM	IN	Dia.	Len.	Class 2
5/6	7/32	11	14	9/16-12 UNC
7/8	9/32	12	16	5/8-11 UNC
10	3/8	15	19	3/4-10 UNC
13	1/2	21	25	1-8 UNC
16	5/8	25	32	1-1/4-7 UNC

Table 2c				
Metric				
Table Size		(A)	(B)	(C) Min. Thread
MM	IN	Dia.	Len.	Class 4g6g
5/6	7/32	11	14	M14x2
7/8	9/32	13	16	M16x2
10	3/8	16	20	M20x2.5
13	1/2	20	24	M24x3
16	5/8	25	30	M30x3.5

Safe use of self-locking hook

- Alloy steel BK self-locking hooks may be used to rig personnel platforms when lift system is in full compliance with OSHA 1926.1501(g) and passing the applicable inspection criteria.
- Loads shall be centered in the base (bowl/ saddle) of hook to prevent point loading of the hook (See Figure 1a, 1b & 1c).
- Hooks shall not be used in such a manner as to place a side load or back load on the hook (See Figure 2a & 2b).
- When using a device to close the throat opening of the hook, care shall be taken that the load is not carried by the closing device (See Figure 3a & 3b).
- Hands, fingers and body shall be kept from between hook and load.
- The use of a hook with a latch does not preclude the inadvertent detachment of a slack sling or a load from the hook. Visual verification of proper hook engagement is required in all cases.
- Self-locking hooks shall be locked during use.
- When a hook is equipped with a latch, the latch should not be restrained from closing during use.
- Self-locking hooks shall not be rigged with more than two (2) sling legs in the hook saddle and sling leg angles shall not be greater than 45° from hook centerline (Figure 1b).
- Self-locking hooks shall be rigged with a master ring or shackle when three (3) or more sling legs are used or sling leg angles exceed 45° from hook centerline (Figure 1c).

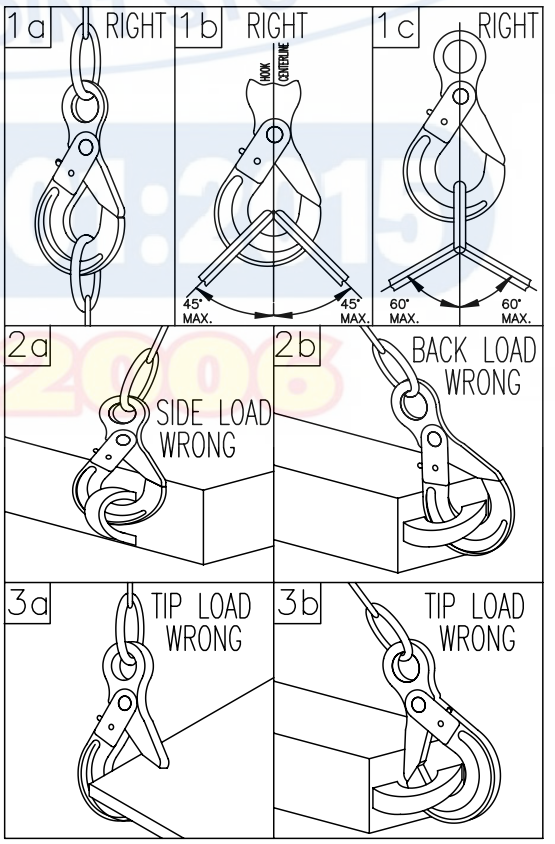

This application/warning information apply to Gunnebo products only.

© 2023 The Crosby Group LLC. All Rights Reserved.

Correct Use

A chain sling is usually attached to the load and the crane by means of terminal fittings such as hooks, links etc.

When frequently using a sling to it's maximum load, we recommend increasing the sling size by one dimension.

Chain should be without twists or knots, if the chain leg needs length adjustment use a shortening device. The lifting point should be seated well down in the terminal fitting, never on the point or wedged in the opening. The terminal fitting should be free to incline in any direction.

The chain may be passed under or through the load to form a choke hitch or basket hitch. The chain should be allowed to assume it's natural angle and should not be hammered down.

Where choke hitch is employed the WLL of the chain sling shall be reduced by 20%.

Endless chain slings shall be rated in the same way as a 2-legged sling.

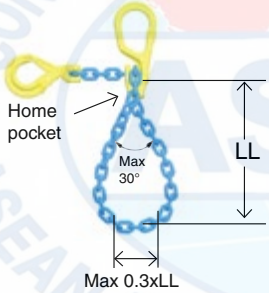

Home pocket loop shall have an internal loop top angle of max. 30°. Rule of thumb: Cross dimension of the load shall be max. 0.3 times the loop length (LL)

Definition: The home pocket is the shortening pocket of the top component directly above the clevis to which the chain is connected.

Sharp edges

Use edge protectors to prevent sharp edges from damaging the chain. If lifting over sharp edges reduce the working load with the following reduction tor.

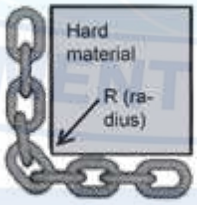

Edge load	R >2 x chain Ø	R > chain Ø	R < chain Ø
Reduction factor	1.0	0.7	0.5

- The angle of the edge must not be below 90°.
- Chain links shall be protected from being bent or deformed and from receiving cuts or gouges.
- Chain sling WLL is to be reduced when chain is rigged over an edge radius R less than two (2) x chain diameter (d).
- Reduced WLL equals chain sling WLL from identification tag x reduction factor.
- Slings shall be padded or protected from the edges of their loads when the edge radius is less than 0.5 of the chain diameter(d).
- Slings shall be rigged to prevent chain from sliding over a load edge radius while lifting.
- Slings used in basket hitch shall have the loads balanced to prevent slipping.

When lifting with chain directly on lugs the lug diameter > 3x the pitch of the chain, otherwise the WLL must be reduced by 50%.

Maintenance

Periodic thorough examination must be carried out at least every 12 months or more frequently according to local statutory regulations, type of use and past experience.

1. Overloaded chain slings must be taken out of service.
2. If the lifting equipment is more than 25 years old, it must be recorded in the inspection register. An investigation into both its previous operating history and its current use should be made, as there is a potentially significant risk of fatigue, environmental impact etc.
3. Chain and components including load pins which have been damaged, deformed, elongated, bent or showing signs of cracks or gouges shall be replaced. Carefully grind away small sharp cuts and burrs. Additional testing by magnetic particle inspection and/or proof loading at max. 2 x WLL may be carried out.
4. The maximum permissible increase in hook aperture must not exceed 10% of the products nominal dimension.
5. Check the function of latches, triggers and retaining pins / bushes, replace when necessary. Always use Gunnebo Industries original spare parts.
6. Max. clearance between hook and latch. Note: For a Griplatch hook measure the difference between dimension A with unloaded spring and dimension A when the latch is pressed against the hook. Clearance B not applicable.

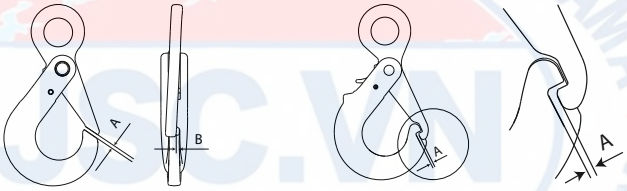

Trade size		Max. clearance (A)				Max. clearance (B)	
		Material handling		Personnel handling		(NA for griplatch hooks)	
mm	inch	mm	inch	mm	inch	mm	inch
6	7/32	2.2	0.09	1.5	0.06	3.5	0.14
7/8	9/32	2.7	0.11	1.9	0.07	4.5	0.18
7	9/32	2.7	0.11	1.9	0.07	4.5	0.18
8	5/16	2.7	0.11	1.9	0.07	4.5	0.18
10	3/8	3.0	0.12	2.1	0.08	6.0	0.24
13	1/2	3.3	0.13	2.3	0.09	7.0	0.28
16	5/8	4.0	0.16	2.8	0.11	9.0	0.35
18/20	3/4	5.5	0.22	3.9	0.15	10.0	0.39
22	7/8	6.0	0.24	4.2	0.17	11.0	0.43
26	1	6.5	0.26	4.6	0.18	12.0	0.47
32	1 1/4	7.0	0.28	4.9	0.19	13.0	0.51

7. The wear of the chain and component shall in no place exceed 10% of the products nominal dimension. The chain link wear is defined and measured as the reduction of the mean diameter measured in two perpendicular directions, see picture.

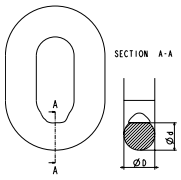

$$\frac{d_1 + d_2}{2} > 0.9d_{nn}$$

d_n = nominal diameter

© 2023 The Crosby Group LLC. All Rights Reserved.

Quality assurance

Type testing

In order to prove the design, material, heat treatment and method of manufacture, each size of component and chain has been type tested in the finished condition in order to demonstrate that the component and chain possesses the required mechanical properties. The following testing procedures are particularly relevant:

Test for deformation

The Manufacturing Proof Force (MPF) for the relevant size of the component is applied and removed. The dimensions after proof loading shall not alter from the original dimensions within the tolerances prescribed in our specifications and in the international standards.

Static tensile test

The Breaking Force (BF) for each component and size is verified. The verified value shall be at least equal to the Minimum Breaking Force (MBF) value. The MBF value is equal to the Working Load Limit (WLL) multiplied by the safety factor.

Fatigue test

By fatigue testing in pulsator testing machines the toughest conditions of service are simulated.

Manufacturing testing

During manufacture continuous process tests are carried out according to the requirements in our specifications and in the latest international standards. The following testing procedures are particularly relevant:

Non destructive test

3% of every production batch of forged components are subject to magnetic particle or dye penetrating examination.

Proof force / visual inspection

Each individual component and chain link is tested to the Manufacturing Proof Force (MPF) level before delivery. The MPF level is 2.5 times the WLL, equal to 62.5% of the Minimum Breaking Force. Visual inspection is carried out on each chain link and each forged component to detect defects.

Static tensile and ultimate elongation test

During chain manufacture, samples are tested and the Minimum Breaking Force (MBF) value and the total ultimate elongation are verified.

Bending deflection

During manufacturing, of chain and master links, samples are taken and the minimum bend deflection is verified.

Stress / elongation diagram

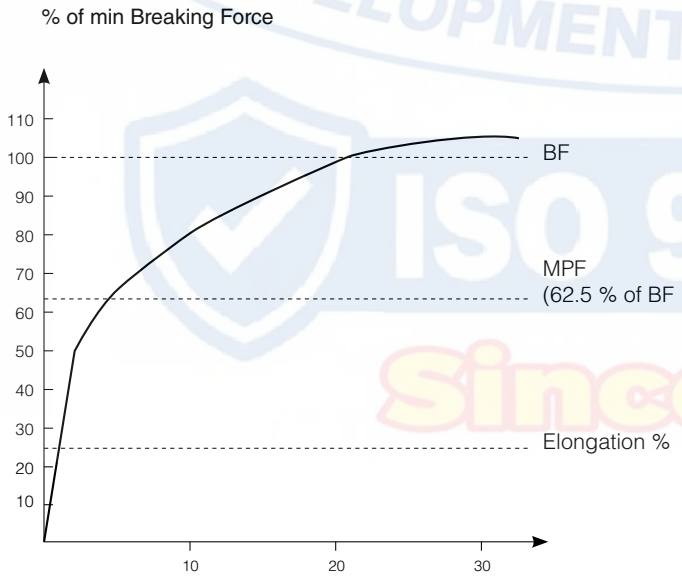

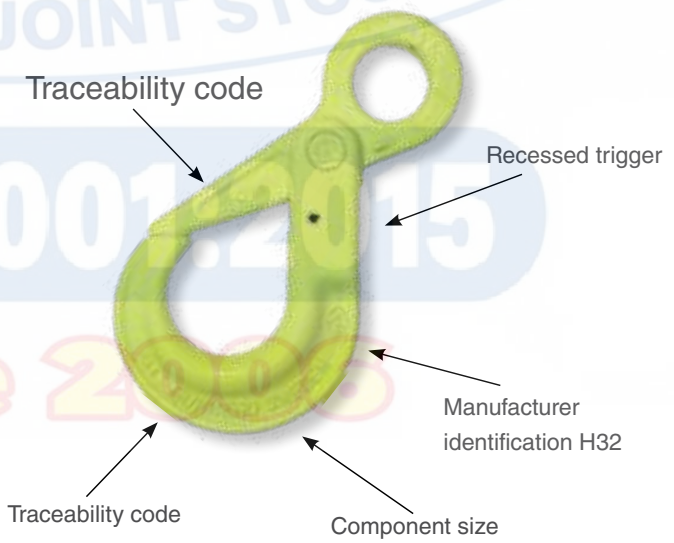

This application/warning information apply to Gunnebo products only.

© 2023 The Crosby Group LLC. All Rights Reserved.

Crosby® S-4338 Pin Latch

WARNING & APPLICATION INSTRUCTIONS

S-4338 Pin Latch

Important Safety Information Read and Follow

- Always inspect hook and pin latch before using.
- Never use a pin latch that is distorted or bent.
- Always make sure internal spring will force the pin latch forward closing throat opening of grab hook (See Figure 1).
- When a Pin Latch is provided, it is designed to retain loose chain under slack condition.
- Always make sure hook supports the load. The pin latch must never support the load (See Figure 1, 2, 3 and 4).
- Pin latch is not intended to be an anti-fouling device.
- Recommended for use with Crosby L-1338 or L-1358 Grab Hooks.

Important – Instructions for Assembling

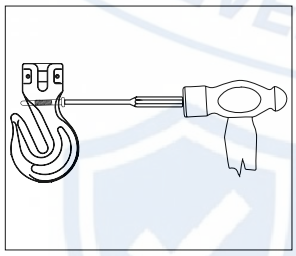

Step 1: Using a hammer and the correct roll-pin punch per chart on the right, drive the old latch pin assembly out of hook.

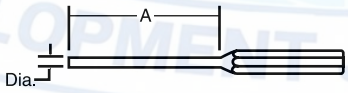

Hook Size (in)	Hook Size (mm)	Punch Dia. (mm)	A (mm)
1/4	7	5	75
5/16	8	5	75
3/8	10	5	75
1/2	13	8	100
5/8	16	10	100

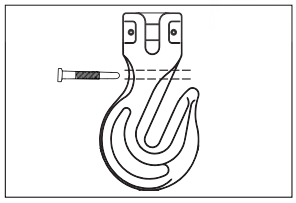

Step 2: Insert new S-4338 pin assembly into hook.

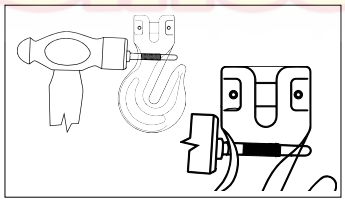

Step 3: Using hammer, tap lightly on latch pin head until guide bushing shoulder touches hook.

⚠ WARNING

- **Loads may disengage from hook if proper procedures are not followed.**
- **A falling load may cause serious injury or death.**
- **Hook must always support the load. The load must never be supported by the pin latch.**
- **See OSHA Rule 1926.1431(g)(1)(i)(A) and 1926.1501(g)(4)(iv)(B). A hook and this style latch must not be used for lifting personnel.**
- **Read and understand these instructions before using hook and pin latch.**

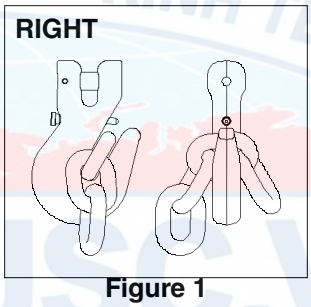

Figure 1

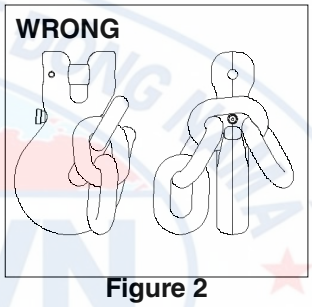

Figure 2

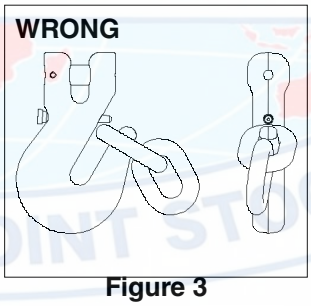

Figure 3

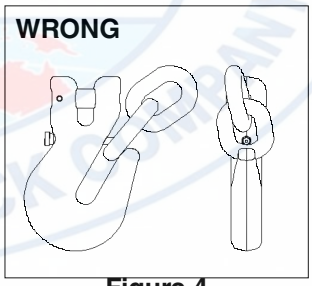

Figure 4

ASEAN JSC.VN
ISO 9001:2015
Since 2006

© 2023 The Crosby Group LLC. All Rights Reserved.

ALLOY STEEL CHAIN SLINGS AND CROSBY ELIMINATOR®

WARNING SELECTION, USE & APPLICATION INFORMATION

⚠ WARNING

- **Loads may disengage from sling if proper rigging procedures and inspection are not followed.**
- **A falling load may cause serious injury or death.**
- **Inspect sling for damage before each use.**
- **Do not attempt to use sling above rated load and angle upon which it is based.**
- **Consult sling load chart for capacity reduction due to sling angle or type of hitch used.**
- **Read and understand these instructions before using sling.**

IMPORTANT SAFETY INFORMATION

Read and Follow

These warnings and instructions are applicable to alloy chain slings produced from Crosby Grade 8 (80) and Grade 10 (100) chain and components.

- Only alloy chain, grade 80 (Crosby Spectrum 8®), or grade 100 (Crosby Spectrum 10®), should be used for overhead lifting applications.
- Working Load Limit (WLL) is the maximum load in pounds which should ever be applied to chain, when the chain is new or in "as new" condition, and when the load is uniformly applied in direct tension to a straight length of chain.
- Working Load Limit (WLL) is the maximum working load for a specific minimum sling angle, measured from the horizontal plane. The minimum sling angle and Working Load Limit is identified on the sling.
- The Working Load Limit or Design factor may be affected by wear, misuse, overloading, corrosion, deformation, intentional alterations, sharp corner cutting action diameter of curvature over which the sling is used (D/d) and other use conditions.
- Shock loading and extraordinary conditions must be taken into account when selecting alloy chain slings.
- See OSHA Regulation for Slings 1910.184, ASME B30.9-"SLINGS", ASME B30.10-"HOOKS", and ASME B30.26 "RIGGING HARDWARE" for additional information.

ASME B30.9 requires a designated person inspect each new sling and attachments prior to initial use, as well as the user or other designated person perform a visual inspection on a sling each day it is used. In addition, a periodic inspection shall be performed by a designated person at least annually, and shall maintain a record of the last inspection. For further inspection information, see Chain Inspection section of this document, or refer to ASME B30.9-1.9.

CAUSE FOR REMOVAL FROM SERVICE

A sling shall be removed from service if any of the following are visible on chain or attachments:

- Wear, nicks, cracks, breaks, gouges, stretch, bend, weld splatter, discoloration from excessive temperature, or throat openings of hooks.
- Chain links and attachments that do not hinge freely to adjacent links.
- Latches on hooks, if present, that do not hinge freely, seat properly or show evidence of permanent distortion.
- Excessive pitting or corrosion.
- Missing or illegible sling identification.
- Makeshift fasteners, hooks, or links formed from bolts, rods, etc.
- Mechanical coupling links in the body of the chain.
- Other damage that would cause a doubt as to the strength of the chain.

OPERATING PRACTICES

- The weight of the load must be known, calculated, estimated or measured. The loading on the slings will depend on where the center of gravity is located.
- Select sling having suitable characteristics for the type of load, hitch and environment.
- Slings shall not be loaded in excess of the rated capacity.
- Consideration shall be given to the sling load angle which affects rated capacity (See load chart Table 4 for Grade 100 (SPECTRUM 10®) and Table 5 for Grade 80 (SPECTRUM 8®).
- Never rig a sling with an angle less than 30 degrees to horizontal.
- Slings in a basket hitch should have the load balanced to prevent slippage.
- The sling shall be hitched in a manner providing control of the load.
- Never side load, back load, or tip load a hook.
- Always make sure the hook supports the load. The latch must never support the load.
- Read and understand Crosby hook and hook latch Warnings and Application Instructions.
- For two legged slings with angles greater than 90 degrees, use an intermediate link such as a master link or bolt type shackle to collect the legs of the slings. The intermediate link can be placed over the hook to provide an in-line load on the hook. This approach must also be used when using slings with three or more legs.
- When using chain slings in choker applications, the Working Load Limit must be reduced by 20%. Crosby recommends a minimum angle of choke of 120 degrees (see Figure 1). Consult the manufacturer when planning to use an angle of choke less than 120 degrees. If Crosby A-1338 Cradle Grab hooks are used at the minimum angle of choke of 120 degrees, the full sling rated WLL can be utilized.

Figure 1

- When using chain slings in basket applications where the D/d (see figure 2) is less than 6, the rated load must be reduced by the values given in Table 1. This reduction does not eliminate the need to protect chain slings against damage caused by contact with edges, corners, or protrusions. Do not use a chain sling with a D/d that is less than two.

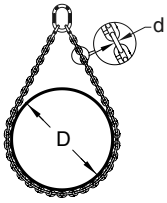

Figure 2

- In shortening applications, a 20% reduction of the Working Load Limit is required except when using the Crosby A-1338 Cradle Grab Hooks, S-1311 Chain Shortener Link, the A-1355 Chain Choker Hook in conjunction with the S-1325 Chain Coupler Link, or the Crosby ELIMINATOR® shortener link. They can be used without any reduction to the Working Load Limit.

This application/warning information apply to Crosby products only.

© 2023 The Crosby Group LLC. All Rights Reserved.

- Slings should always be protected from being damaged by sharp corners.
- Slings should not be dragged on the floor or over abrasive surfaces.
- Chain sling links should not be twisted or kinked.
- Slings should not be pulled from under loads if the load is nesting on the sling.
- Slings that appear to be damaged should not be used unless inspected and accepted by designated person.
- All portions of the human body should be kept from between the sling and the load, and from between the sling and the crane hook or hoist hook.
- Personnel shall stand clear of the suspended load.
- Personnel shall not ride the sling.
- Shock loading should be avoided.
- Twisting or kinking the legs (branches) should be avoided.
- During lifting, with or without the load, personnel should be alert for possible snagging.
- When using a basket hitch, the legs of the sling should contain or support the load from the sides, above the center of gravity, so that the load remains under control.
- Sling shall be long enough so that the rated capacity of the sling is adequate when the angle of the legs (branches) is taken into consideration (See Table 4 for Grade 100 Chain and Table 5 for Grade 80 Chain).

General Usage

It must be recognized that certain factors in the usage of chain and attachments can be abusive and lessen the load that the chain or attachments can withstand. Some examples are twisting of the chain; disfigurement; deterioration by straining, usage, weathering and corrosion; rapid application of load or jerking; applying excessive loads; sharp corner cutting, D/d, action and non-symmetrical loading effects.

Environmental Effects

- Excessive high or low temperatures or exposure to chemically active environments such as acid or corrosive liquids or fumes can reduce the performance of the chain and components.
- Extreme temperature will reduce the performance of alloy steel chain slings.
- Normal operating temperature is -40°C to 200°C (–40°F to 400°F).
- Reference temperature exposure chart to determine reduction of WLL due to operating at, and after exposure to, elevated temperatures (see Table 2 for Grade 80 Chain and Table 3 for Grade 100 chain).
- Chemically active environments can have detrimental affects on the performance of chain. The effects can be both visible loss of material and undetectable material degradation causing significant loss of strength.

Special Surface Coating/Plating/Galvanizing

- Chain should not be subjected to galvanizing, or any plating process. If it is suspected the chain has been exposed to chemically active environment, remove from service.

Table 1
Use of Crosby Chain with Diameter of Curvature Less Than 6

D/d	Reduction of Basket Hitch Rated Load
2	40%
3	30%
4	20%
5	10%
6 and above	none

Table 2
Grade 80 Crosby & Gunnebo Chain At Elevated Temperatures

Temperature of Chain (F°)	Temperature of Chain (C°)	Temporary Reduction of Rated Load at Elevated Temperature*	Permanent Reduction of Rated Load After Exposure to Temperature**
Below 400	Below 200	None	None
400	200	10%	None
500	260	15%	None
600	316	20%	5%
700	371	30%	10%
800	427	40%	15%
900	482	50%	20%
1000	538	60%	25%
Over 1000	Over 538	OSHA 1910.184 requires all slings exposed to temperatures over 1000° F to be removed from service.	

* The Crosby Group does not recommend the use of alloy chain slings at temperatures above 800° F.
** When chain slings are used at normal operating temperature after being heated to temperatures shown in the first column.

Table 3
Grade 100 Crosby & Gunnebo Chain At Elevated Temperatures

Temperature (F°)	Temperature (C°)	Temporary Reduction of Rated Load at Elevated Temperature*	Permanent Reduction of Rated Load After Exposure to Temperature**
Below 400	Below 200	None	None
400	200	15%	None
500	260	25%	5%
600	316	30%	15%
700	371	40%	20%
800	427	50%	25%
900	482	60%	30%
1000	538	70%	35%
Over 1000	Over 538	OSHA 1910.184 requires all slings exposed to temperatures over 1000 F to be removed from service.	

* The Crosby Group does not recommend the use of alloy chain slings at temperatures above 800° F.
** When chain slings are used at normal operating temperature after being heated to temperatures shown in the first column.

CHAIN INSPECTION
INSPECTION AND REMOVAL FROM SERVICE PER ASME B30.9

Refer to ASME B30.9-1.9 for further information

Frequent Inspection

a. A visual inspection for damage shall be performed by the user or designated person each day the sling is used.
b. Conditions such as those listed in ASME B30.9-1.9.4 Removal Criteria, or any other condition that may result in a hazard, shall cause the sling to be removed from service. Slings shall not be returned to service until approved by a qualified person.
c. Written records are not required for frequent inspections.

Periodic Inspection

a. A complete inspection for damage of sling shall be periodically performed by a designated person. Each link and component shall be examined individually, taking care to expose and examine all surfaces including the inner link surface. The sling shall be examined for conditions such as those listed in ASME B30.9-1.9.4 Removal Criteria, and a determination made as to whether they constitute a hazard.
b. Periodic Inspection Frequency: Periodic inspection intervals shall not exceed one year. The frequency of periodic inspections should be based on:
   1. Frequency of sling use.
   2. Severity of service conditions.
   3. Nature of lifts being made.
   4. Experience gained on the service life of slings used in similar circumstances.

© 2023 The Crosby Group LLC. All Rights Reserved.

Guidelines for the interval are:
1. Normal Service – yearly
2. Severe Service – monthly to quarterly
3. Special Service – as recommended by a qualified person

c. Written records of the most recent periodic inspection shall be maintained, and shall include the condition of the sling.

Removal Criteria

An alloy sling chain shall be removed from service if conditions such as the following are present:

a. Missing or illegible sling identification.
b. Cracks or breaks.
c. Excessive wear, nicks, or gouges. Minimum thickness on chain link shall not be below the values listed in Table 6.
d. Stretched chain links or components.
e. Bent, twisted, or deformed chain links or components
f. Evidence of heat damage.
g. Excessive pitting or corrosion.
h. Lack of ability of chain or components to hinge (articulate) freely.
i. Weld spatter.
j. For hooks, removal criteria as stated in ASME B30.10.
k. Other conditions, including visible damage, that cause doubt as to the continued use of the sling.

Repair

a. Slings shall be repaired only by the sling manufacturer or a qualified person.
b. A repaired sling shall be marked to identify the repairing agency per ASME B30.9 Section 9-1.7.
c. Chain and components used for sling repair shall comply with the provisions of ASME B30.9.
d. Repair of hooks shall comply with ASME B30.10.
e. Cracked, broken or bent chain links or components other than hooks shall not be repaired; they shall be replaced.
f. Mechanical coupling links shall not be used within the body of an alloy chain sling to connect two pieces of chain.
g. Modifications or alterations to the sling or components shall be considered as repairs and shall conform to all other provisions of ASME B30.9.
h. All repairs shall comply with the proof test requirements of ASME B30.9 Section 9-1.6.

Table 6
Minimum Allowable Chain Link Thickness at Any Point

Nominal Chain Size		Minimum Thickness	
(in)	(mm)	(in)	(mm)
7/32	5.5	0.189	4.80
9/32	7	0.239	6.07
5/16	8	0.273	6.93
3/8	10	0.342	8.69
1/2	13	0.443	11.26
5/8	16	0.546	13.87
3/4	20	0.687	17.45
7/8	22	0.750	19.05
1	26	0.887	22.53
1-1/4	32	1.091	27.71
Refer to ASME B30.9			

Table 4
Grade 100 (Spectrum 10®) Alloy Chain Working Load Limit – 4 to 1 Design Factor

Nominal Size of Sling			Two Leg Slings		Triple and Four-Leg Slings		
(mm)	(in)	Single Leg t	0°<ß≤45° t	45°<ß≤60° t	0°<ß≤45° t	45°<ß≤60° t	Choker Hitch *t
6	7/32	1,40	2,00	1,40	3,00	2,12	1,12
7	1/4 (9/32)	2,00	2,80	2,00	4,20	3,00	1,60
8	5/16	2,50	3,55	2,50	5,30	3,75	2,00
10	3/8	4,00	5,60	4,00	8,00	6,00	3,20
13	1/2	6,70	9,50	6,70	14,0	10,0	5,35
16	5/8	10,0	14,0	10,0	21,2	15,0	8,00
19	3/4	14,0	20,0	14,0	30,0	21,0	11,2
22	7/8	18,8	26,5	18,8	39,4	28,0	15,0
23	7/8	21,0	29,5	21,0	44,4	31,5	16,8
26	1	27,0	38,0	27,0	57,0	40,0	21,2
32	1-1/4	40,0	56,0	40,0	85,0	60,0	32,5

* For choker applications, the Working Load Limit must be reduced by 20%. The Crosby A-1338 cradle grab hook and S1311N chain shortener link do not require any reduction of the Working Load Limit. The design factor of 4 to 1 on Spectrum® 10 Alloy Chain agrees with the design factor used by the International Standards Organization (I.S.O.) and ASME B30.9 and is the preferred set of Working Load Limit values to be used. Do not use sling angles of less than 30°.

Table 5
Grade 80 (Spectrum 8®) Alloy Chain Working Load Limit – 4 to 1 Design Factor

Nominal Size of Sling			Two Leg Slings		Triple and Four-Leg Slings		
(in)	(in)	Single Leg t	0°<ß≤45° t	45°<ß≤60° t	0°<ß≤45° t	45°<ß≤60° t	Choker Hitch * t
6	7/32	1,12	1,60	1,12	2,36	1,70	0,90
7	1/4 (9/32)	1,50	2,12	1,50	3,15	2,24	1,20
8	5/16	2	2,80	2	4,25	3	1,60
10	3/8	3,15	4,25	3,15	6,70	4,75	2,50
13	1/2	5,30	7,50	5,30	11,20	8	4,25
16	5/8	8	11,20	8	17	11,80	6,40
19-20	3/4	11,20	16	11,20	23,60	17	9
22	7/8	15	21,20	15	31,50	22,40	12
26	1	21,20	30	21,20	45	31,50	17
32	1-1/4	31,50	45	31,50	67	47,50	25,20

* For choker applications, the Working Load Limit must be reduced by 20%. The Crosby A-1338 cradle grab hook and S1311N chain shortener link do not require any reduction of the Working Load Limit. The design factor of 4 to 1 on Spectrum® 8 Alloy Chain agrees with the design factor used by the International Standards Organization (I.S.O.) and ASME B30.9 and is the preferred set of Working Load Limit values to be used. Do not use sling angles of less than 30°.

This application/warning information apply to Crosby products only.
© 2023 The Crosby Group LLC. All Rights Reserved.

CROSBY ELIMINATOR®

WARNING & APPLICATION INSTRUCTIONS

⚠ WARNING

- **Failure to read, understand, and follow these instructions may cause death or serious injury.**
- **Read and understand these instructions before using the Crosby ELIMINATOR®.**
- **Incorrectly rigging or terminating exerts additional force or loading, which the Crosby ELIMINATOR® is not designed to accommodate.**

Crosby ELIMINATOR® Definitions

The **Crosby ELIMINATOR®** consists of a bail, hinge bolt, latch pin, and lower body with cradle slot/slots.

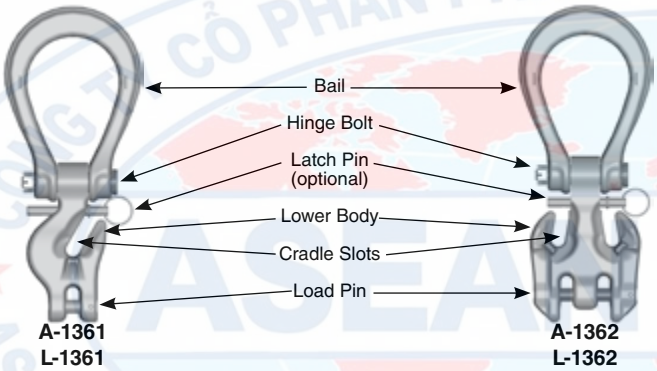

The **Crosby ELIMINATOR®** incorporates markings forged into the product which address a **QUIC-CHECK®** feature:

Deformation Indicators – Two strategically placed marks on each leg of the bail, which allows for a **QUIC-CHECK®** measurement to determine if the bail opening has changed, thus indicating abuse or overload. To check, use a measuring device (i.e. tape measure) to measure the distance between the marks. The marks should align to either an inch or half-inch increment on the measuring device. If the measurement does not meet criteria, the **Crosby ELIMINATOR®** bail should be inspected further for possible damage.

Important Safety Information Read and Follow

- A visual periodic inspection for cracks, nicks wear, gouges and deformation as part of a comprehensive documented inspection program, should be conducted by trained personnel in compliance with ANSI B30.9.
- Remove from service any **Crosby ELIMINATOR®** components with a crack, nick, or gouge. The bail and body of a **Crosby ELIMINATOR®** with nick or gouge shall be repaired by a qualified person. The qualified person shall repair by grinding longitudinally following the contour of the forging, provided that the reduced dimension is within the limits shown in (Fig. A).

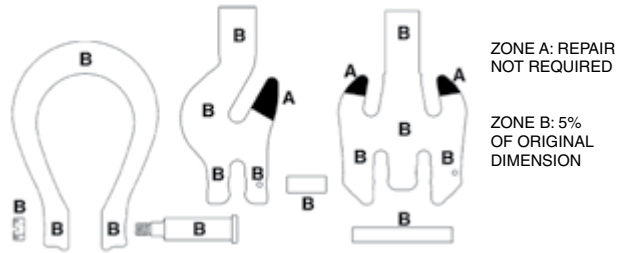

Figure A

- Never repair, alter, rework, or reshape a **Crosby ELIMINATOR®** by welding, heating, burning, or bending.
- **Crosby ELIMINATOR®** combination master link and chain shortener shall not be used in a manner other than that for which it is intended.
- The sling may be shortened by use of the cradle slot/slots (see Fig. C).
- In shortening applications, the **Crosby ELIMINATOR®** can be used without any reduction to the Working Load Limit.
- Never terminate (i.e. place a load bearing chain sling hook), or reeve load bearing chain through **Crosby ELIMINATOR®** bail (see Fig. B).
- Never exceed the rated capacity shown on sling's identification tag.
- Attach lifting device to ensure free fit of **Crosby ELIMINATOR®** bail (see Fig. D). Never allow lifting device to apply forces on side of bail (see Fig. E), as this condition will damage and reduce the capacity of the **Crosby ELIMINATOR®.**
- The **Crosby ELIMINATOR®** is intended for tension or pull. Side loading must be avoided, as it exerts additional force or loading which the product is not designed to accommodate (see Fig. F).

Figure B

Figure C

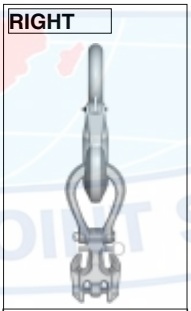

Figure D

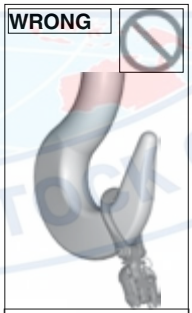

Figure E

Figure F

- Never use a **Crosby ELIMINATOR®** where the bail shows signs of deformation or overloading (see Table 1).
- Read and understand the other sections of the ALLOY STEEL CHAIN SLINGS Warning, Selection, Use & Maintenance Information.

TABLE 1
Crosby ELIMINATOR® Bail Dimensions

Chain Size (in)	Chain Size (mm)	Frame I.D. Code	Inside Length (mm)	Inside Width (mm)	Jaw Width (mm)	QUIC-CHECK® Dim (mm)
1/4 - 5/16	7 - 8	2	98.6	76.2	23.9	88.9
3/8	10	3	122	88.9	28.7	102
1/2	13	4	152	105	33.3	127
5/8	16	5	174	121	41.4	152

- A **Crosby ELIMINATOR®** under load shall be allowed to self-align itself about the hinge pin.
- The use of a latch may be mandatory by regulations or safety codes; e.g. OSHA, MSHA, ASME B30.10 and B30.9.
- If Crosby latch pin is present, it should fit and function properly, and show no signs of distortion or bending.
- Always make sure the chain is seated in the cradle slot, and the cradle supports the load. The latch pin must never support the load.
- Latch pins are not intended to be an anti-fouling device.
- Use only genuine Crosby repair and latch pins parts.

© 2023 The Crosby Group LLC. All Rights Reserved.

A-1361 Single Leg Crosby ELIMINATOR®

- The A-1361 single leg **Crosby ELIMINATOR®** is designed to support a single leg vertical load. The cradle slot may be used to make a loop in the leg (see Fig. G). However, the Working Load Limit is still limited to the single leg values shown in Table 4 (Grade 100) and Table 5 (Grade 80).
- To produce a single basket hitch and achieve the full Working Load Limit, use only one length of chain with both ends terminated into the load pins of two A-1361 single leg **Crosby ELIMINATOR®** fittings (see Fig. H). Basket may be shortened with cradle slot.
- Never exceed the single leg Working Load Limit shown in Table 4 (Grade 100) and Table 5 (Grade 80) for an individual A-1361 **Crosby ELIMINATOR®** fitting.

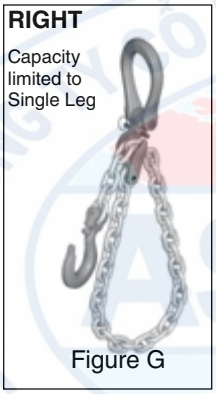

Figure G

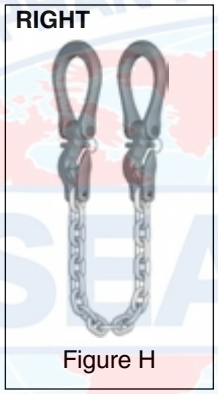

Figure H

A-1362 Double Leg Crosby ELIMINATOR®

- The A-1362 double leg **Crosby ELIMINATOR®** is designed to support symmetrically loaded double leg slings at 60, 45, and 30 degree horizontal angles. The cradle slots may be used to make loops in the legs (see Fig. J). However, the Working Load Limit is limited to the double leg values shown in Table 4 (Grade 100) and Table 5 (Grade 80).
- To produce a single basket hitch, and achieve the full Working Load Limit, use only one length of chain with both ends terminated into the load pin (see Fig. K). Basket may be shortened with the cradle slot or slots.
- To produce a double basket hitch and achieve the full Working Load Limit, two A-1362 double leg **Crosby ELIMINATOR®** fittings must be used, with both being terminated at their load pin (see Fig. L).
- Never exceed the double leg / single basket Working Load Limit on an individual A-1362 **Crosby ELIMINATOR®** fitting.

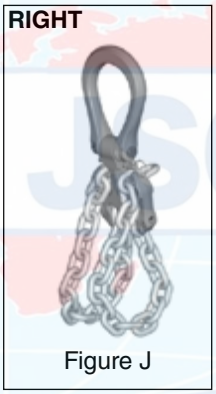

Figure J

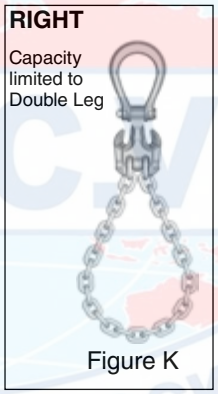

Figure K

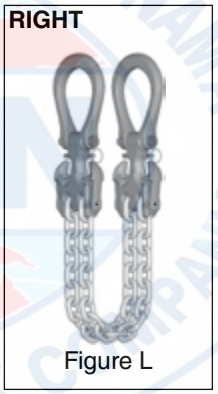

Figure L

This application/warning information apply to Crosby products only.

© 2023 The Crosby Group LLC. All Rights Reserved.

Alloy Fittings Application and Information

HOW TO ASSEMBLE AN S-1325 COUPLER LINK ONTO MASTER LINK

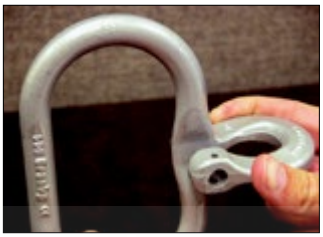

1. Slide Coupler Link over Engineered Flat of Master Link.

2. Rotate Coupler Link so that clevis fitting is to the outside of Master Link and attach to chain sling.

HOW TO ASSEMBLE A CROSBY CLEVIS TYPE FITTING

1. Place chain link into clevis of chain coupler. Insert pin fully into the clevis ears.

2. Place the coupler link on its side and using a hammer, drive the locking pin into the clevis ear until it is flush with the outside surface.

HOW TO ASSEMBLE A LOK-A-LOY® CONNECTING LINK

1. Place the locking sleeve between the assembled half link forgings.

2. Drive the pin through the assembled link ends and sleeve until the end of the pin is flush with the outside of the connecting link halves.

HOW TO ASSEMBLE LOAD PIN IN CROSBY ELIMINATOR® FITTINGS

1. Place both chain links into clevis slots of fitting, insert pin fully into the two-leg clevis.

2. Place Eliminator assembly on a firm surface. Using a hammer, drive the locking pin into the two-leg clevis until it is flush with the top of the hole.

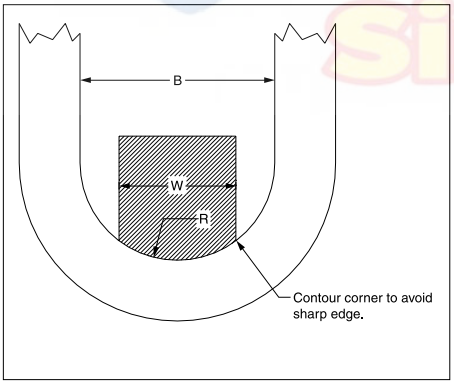

Figure 1

Crosby master links and master link assemblies are proof tested with special fixtures in accordance with ASTM A952 and EN-1677-4. The purpose of the special fixture is to prevent localized point loading during the proof test. Point loading at the proof test load may result in permanent deformation. ASTM A952 allows for a maximum proof test fixture width (W) of 60% of the inside width (B) of the master link. EN 1677-4 allows for a maximum proof test fixture width (W) of 70% of the inside width (B) of the master link. The radius of the fixture (R) is one-half of inside width of the master link. A sketch showing an example of the special fixture is shown in Figure 1. Note that the corner of the fixture should be contoured so that a sharp edge does not make contact with the master link during the loaded condition.

Over the years some master links and master link assemblies have changed dimensions and working load limits. Special consideration should be given to the actual inside width of the master link being tested and its correct allowable proof load value. If the correct allowable proof load value is in question, then Crosby Engineering should be consulted for the appropriate proof load value.

© 2023 The Crosby Group LLC. All Rights Reserved.

Grade 80 & 100 Alloy Chain

WORKING LOAD LIMIT

The "Working Load Limit" is the maximum load in pounds which should ever be applied to chain, when the chain is new or in as-new condition, and when the load is uniformly applied in direct tension to a straight length of chain.

PROOF TEST

The "Proof Test" is a term designating the tensile test applied to new chain for the sole purpose of detecting injurious defects in the material or manufacture. It is the load that the chain has withstood under a test in which the load has been applied in direct tension to a straight length of chain.

MINIMUM ULTIMATE LOAD

The "Minimum Ultimate Load" is the minimum load at which new chain will break when tested by applying direct tension to a straight length of chain at a uniform rate of speed in a testing machine.

ATTACHMENTS

Any attachments, such as hooks or links, should have a rated "Working Load Limit" at least equal to the chain with which it is used.

SYMMETRICAL LOADING

Rated Working Load Limit assumes symmetrical loading of all sling legs.

SPECIFICATIONS: ASME B30.9 2006

Paragraph 9-1.6.1 "Prior to initial use, all new and repaired chain and components of an alloy steel chain sling, either individually or as an assembly, shall be proof tested by the sling manufacturer or qualified person."

CAUTION

Only Crosby Alloy chain, Spectrum 8® or Spectrum 10®, should be used for overhead lifting applications.

General Usage – It must be recognized that certain factors in the usage of chain and attachments can be abusive and lessen the load that the chain or attachments can withstand. Some examples are twisting of the chain; disfigurement; deterioration by straining, usage, weathering and corrosion; rapid application of load or jerking; applying excessive loads; sharp corner cutting action and non-symmetrical loading effects.

When using chain slings in choker applications, the Working Load Limit must be reduced by 20%. Crosby recommends a minimum angle of choke of 120 degrees. Consult Crosby when planning to use an angle of choke of less than 120 degrees. If Crosby A-1338 cradle grab hooks are used at a minimum angle of choke of 120 degrees, the full sling rated WLL can be utilized.

In shortening applications, a 20% reduction of the Working Load Limit is required except when using the Crosby A-1338 Cradle Grab Hooks, S-1311 Chain Shortener Link, the A-1355 Chain Choker Hook in conjunction with the S-1325 Chain Coupler Link, or the Crosby ELIMINATOR® shortener link. They can be used without any reduction to the Working Load Limit.

Care should be taken to observe these derated applications or chain may fracture or permanently stretch at loads less than the advertised chain ultimate strength and proof load respectively.

Environmental Effects – Excessive high or low temperatures, or exposure to chemically active environments such as acids or corrosive liquids or fumes, can reduce the performance of the chain.

Temperature

- Extreme temperatures will reduce the performance of alloy steel chain slings.
- Normal operating temperature is -40° C to 204° C (-40° F to 400° F).
- See the temperature exposure chart (Table 1) to determine reduction of WLL due to operation at, and exposure to, elevated temperatures.

Chemically Active Environments can have detrimental effects on the performance of chain. The effects can be both visible loss of material and undetectable material degradation causing significant loss of strength.

- Usage Exposure – Exposure to chemically active environments such as acids or corrosive liquids or fumes can reduce the performance of the chain.
- Special Surface Coating/Plating/Galvanizing – Chain should not be subjected to galvanizing, or any plating process.
- If it is suspected that the chain has been exposed to chemically active environment, remove from service.

TABLE 1
Use of Crosby Alloy Chain at Elevated Temperatures

Temperature of Chain		Grade 8 (80) Chain		Grade 10 (100) Chain	
(F°)	(C°)	Temporary Reduction of Rated Load at Elevated Temperature*	Permanent Reduction of Rated Load After Exposure to Temperature**	Temporary Reduction of Rated Load at Elevated Temperature*	Permanent Reduction of Rated Load After Exposure to Temperature**
Below 400	Below 200	None	None	None	None
400	200	10%	None	15%	None
500	260	15%	None	25%	5%
600	316	20%	5%	30%	15%
700	371	30%	10%	40%	20%
800	427	40%	15%	50%	25%
900	482	50%	20%	60%	30%
1000	538	60%	25%	70%	35%
Over 1000	Over 538	OSHA 1910.184 and ASME B30.9 requires all slings exposed to temperatures over 1000° F to be removed from service.			

* Crosby does not recommend the use of Alloy Chain at temperatures above 800° F.

** When chain is used at room temperature after being heated to temperatures shown in the first column.

This application/warning information apply to Crosby products only.

© 2023 The Crosby Group LLC. All Rights Reserved.

Working load limits - Europe

Based on EN 818-4:2008 WLL+25%

WLL tonnes Grade 10 GrabiQ

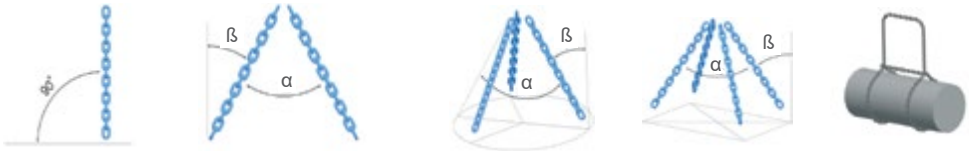

Sling type	1-leg	2-leg		3- and 4-leg		Choke Hitch
Condition of use	Straight	ß 0-45° α 0-90°	ß 45-60° α 90-120°	ß 0-45° α 0-90°	ß 45-60° α 90-120°	Endless sling in choke hitch
Load factor	1	1.4	1	2.1	1.5	1.6
Chain size						
6	1.4	2	1.4	3	2.12	2.24
7	1.9	2.65	1.9	4	2.8	3
8	2.5	3.55	2.5	5.3	3.75	4
10	4	5.6	4	8	6	6.3
13	6.7	9.5	6.7	14	10	10.6
16	10	14	10	21.2	15	16
18	12.5	18	12.5	26.5	19	20
19	14	20	14	30	21.2	22.4
20	16	22.4	16	33.5	23.6	25
22	19	26.5	19	40	28	30
23	21.2	28	21.2	42.5	31.5	33.5
26	26.2	37.5	26.5	56	40	42.5
28	31.5	42.5	31.5	63	45	50
32	40	56	40	85	60	63

Safety factor 4:1. Working load limits are based upon equally loaded and disposed sling legs.

WLL tonnes Grade 8 Classic

EN 818-4:2008

Sling type	1-leg	2 -leg		3- and 4-leg		Choke Hitch
Condition of use	Straight	ß 0-45° α 0-90°	ß 45-60° α 90-120°	ß 0-45° α 0-90°	ß 45-60° α 90-120°	Endless sling in choke hitch
Load factor	1	1.4	1	2.1	1.5	1.6
Chain size						
6	1.12	1.6	1.12	2.36	1.7	1.8
7	1.5	2.12	1.5	3.15	2.24	2.5
8	2	2.8	2	4.25	3	3.15
10	3.15	4.25	3.15	6.7	4.75	5
13	5.3	7.5	5.3	11.2	8	8.5
16	8	11.2	8	17	11.8	12.5
18	10	14	10	21.2	15	16
19	11.2	16	11.2	23.6	17	18
20	12.5	17	12.5	26.5	19	20
22	15	21.2	15	31.5	22.4	23.6
23	16	23.6	16	35.5	25	26.5
26	21.2	30.0	21.2	45	31.5	33.5
28	25	33.5	25	50	37.5	40
32	31.5	45.0	31.5	67	47.5	50

Safety factor 4:1. Working load limits are based upon equally loaded and disposed sling legs.

Rules for correct WLL

Where choke hitch is employed, the WLL of the chain sling should be reduced by 20 % (unless the LK choker hook is used).

Asymmetrical loading conditions

For unequally loaded chain slings, the following is recommended:

- A two-legged system is treated as a single-legged system.
- A three- or four-legged system is treated as a two-legged system.

© 2023 The Crosby Group LLC. All Rights Reserved.

Working Load Limits - United States

WLL t Grade 10 GrabiQ

Working Load Limits in pounds for chain slings grade 10, according to NACM

Based on A 906/A 906M-2

		1-leg	2-leg			3- and 4-leg		
Chain size (mm)	Chain size (in)	WLL (t)	α 60°	α 45°	α 30°	α 60°	α 45°	α 30°
6	-	1.40	2.42	3.43	3.43	3.64	2.97	2.10
7	9/32"	1.95	3.40	2.75	1.95	5.05	4.15	2.95
8	5/16"	2.60	4.50	3.70	2.60	6.75	5.50	3.90
10	3/8"	4.00	6.95	5.65	4.00	10.40	8.50	6.00
13	1/2"	6.80	11.80	9.60	6.80	17.65	14.45	10.20
16	5/8"	10.30	17.75	14.50	10.30	26.65	21.75	15.40
20	3/4"	16.00	27.70	22.60	16.00	41.55	33.95	24.00
22	7/8"	19.40	33.50	27.35	19.40	50.25	41.05	29.05
26	1"	27.10	46.94	38.33	27.10	70.41	57.49	40.65
32	1-1/4"	40.00	69.28	56.57	40.00	103.90	84.90	60.00

Note 1: α is sling angle defined as angle measured between the horizontal plane and the legs of the sling.
Note 2: WLL based upon equally loaded and disposed sling legs.

WLL t Grade 8 Classic

Working Load Limits in pounds for chain slings grade 8, according to NACM

Based on A 906/A 906M-2

		1-leg	2-leg			3- and 4-leg		
Chain size (mm)	Chain size (in)	WLL (t)	α 60°	α 45°	α 30°	α 60°	α 45°	α 30°
6	-	1.12	1.94	1.58	1.12	2.91	2.38	1.68
7	9/32"	1.60	2.75	2.25	1.60	4.15	3.40	2.40
8	5/16"	2.00	3.55	2.90	2.00	5.35	4.35	3.10
10	3/8"	3.20	5.50	4.50	3.20	8.30	6.80	4.80
13	1/2"	5.40	9.45	7.70	5.40	14.15	11.55	8.20
16	5/8"	8.20	14.20	11.60	8.20	21.30	17.40	12.30
19	3/4"	11.20	19.40	15.84	11.20	29.10	23.76	16.80
20	3/4"	12.80	22.25	18.15	12.80	33.40	27.25	19.30
22	7/8"	15.50	26.85	21.90	15.50	40.25	32.90	23.25
26	1"	21.60	37.50	30.60	21.60	56.25	45.95	32.50
32	1-1/4"	32.80	56.80	46.40	32.80	85.20	69.60	49.20

Note 1: α is sling angle defined as angle measured between the horizontal plane and the legs of the sling.
Note 2: WLL based upon equally loaded and disposed sling legs.

This application/warning information apply to Gunnebo products only.

© 2023 The Crosby Group LLC. All Rights Reserved.

Working load limits - Australia

WLL tonnes Grade 10 GrabiQ

Based on AS 3775.2:2014

Sling type	1-leg			2-, 3- and 4-leg				Basket Slings		GrabiQ home pocket loop		
Condition of use	Straight	Adjustable with no deration	Reeved sling (Choke)	Straight 60°	Straight 90°	Straight 120°	Reeved (Choke) Max angle 60°	1-leg	2-leg	1-leg α max 30°	2-,3- and 4-leg 60° α max 30°	2-,3- and 4-leg 90° α max 30°
Load factor	1	1	0.75	1.73	1.41	1	1.3	1.3	2.25	1	1.73	1.41
Chain size												
6	1.4	1.4	1.1	2.4	2	1.4	1.8	1.8	3.4	1.5	2.6	2.1
7	1.9	1.9	1.4	3.3	2.7	1.9	2.5	2.5	4.3	2	3.3	2.7
8	2.5	2.5	1.9	4.3	3.5	2.5	3.3	3.3	5.9	2.6	4.5	3.7
10	4	4	3	6.9	5.6	4	5.2	5.2	9	4	6.9	5.6
13	6.7	6.7	5	11.6	9.4	6.7	8.8	8.8	15.3	6.8	11.8	9.6
16	10	10	7.5	17.3	14.1	10	13	13	23.2	10.3	17.8	14.5
20	16	16	12	27.7	22.6	16	20.8	20.8	36	-	-	-
22	19	19	14.3	32.9	26.8	19	24.7	24.7	45	-	-	-
26	26.5	26.5	19.9	45.8	37.4	26.5	34.5	34.5	60.7	-	-	-
32	40	40	30	69.2	56.4	40	52	52	90	-	-	-

Note 1: Advice regarding the appropriate deration should be sought by the manufacturer
Note 2: The determination of the angle of the multi-leg sling is the largest angle at the apex of the configuration
Note 3: Reeved (choke) slings and basket slings, in a two leg configuration have a maximum angle for us of 60°
Note 4: In the 2-leg basket sling, the master link to be used shall be of an appropriate WLL and with intermediate links. This ensures that the factor 2,25 can be accommodated and that there is no overcrowding with back hooking.
Note 5: For engineered lifts, see Clause 7.2.2 in AS 3775.2:2014

WLL tonnes Grade 8 Classic in Australia

Based on AS 3775.2:2014

Sling type	1-leg			2-, 3- and 4-leg				2-leg
Condition of use	Straight	Adjustable with no deration	Reeved sling (Choke)	Straight β 60°	Straight β 90°	Straight β 120°	Reeved (Choke) Max angle 60°	Basket
Load factor	1	1	0.75	1.73	1.41	1	1.3	2.25
Chain size								
6	1.1	1.1	0.8	1.9	1.6	1.1	1.5	2.5
7	1.5	1.5	1.1	2.6	2.1	1.5	2	3.4
8	2	2	1.5	3.5	2.8	2	2.6	4.5
10	3.2	3.2	2.4	5.5	4.5	3.2	4.1	7.2
13	5.3	5.3	4	9.2	7.5	5.3	6.9	11.9
16	8	8	6	13.8	11.3	8	10.4	18
19	11.2	11.2	8.4	19.4	15.8	11.2	14.6	25.2
20	12.5	12.5	9.4	21.6	17.6	12.5	16.3	28.1
22	15	15	11.3	26	21.2	15	19.5	33.8
26	21.2	21.2	15.9	36.7	29.9	21.2	27.6	47.7
32	31.5	31.5	23.6	54.5	44.4	31.5	41	70.9

Note 1: Advice regarding the appropriate deration should be sought by the manufacturer
Note 2: The determination of the angle of the multi-leg sling is the largest angle at the apex of the configuration
Note 3: Reeved (choke) slings and basket slings, in a two leg configuration have a maximum angle for us of 60°
Note 4: In the 2-leg basket sling, the master link to be used shall be of an appropriate WLL and with intermediate links. This ensures that the factor 2,25 can be accommodated and that there is no overcrowding with back hooking.
Note 5: For engineered lifts, see Clause 7.2.2 in AS 3775.2:2014

© 2023 The Crosby Group LLC. All Rights Reserved.

Tips for chain sling assembly

General

1. The reach of the sling is the length measured from the load bearing surface of the master link to the load bearing surface of the hook or lower terminal (as shown in illustrations).
2. A metal ID tag must always be attached to a chain sling, showing serial number, size, reach, Working Load Limit at angle of lift and manufacturer.
3. Each sling manufactured shall have a completed certificate of test provided to user.

Classic chain slings

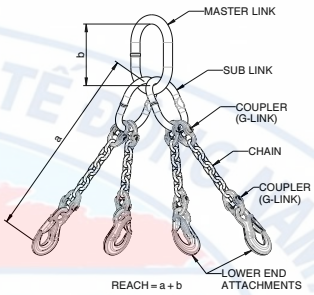

4. Single Leg Sling
   If the required measurement falls in the middle of a link, the next link is cut.
5. Double Leg Sling (clevis system)
   Cut chain to length and count the links. You must have an even number of links so hooks hang in the correct plane. Hooks should always point out, as shown in diagram.
6. Triple or Quadruple Leg Sling (clevis system)
   Cut chain to length and count the links. You must have an odd number of links so hooks hang in the correct plane. Hooks should always point out, as shown in diagram. If the measurement falls in the middle of a link, the next link that produce an odd number is cut.

GrabiQ chain slings

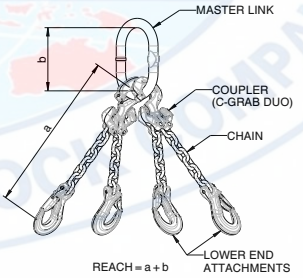

7. It is a common practice, when possible, to keep all hooks in the same plane as the master link. This is easily accomplished on 1, 2, & 4 leg slings. It is not possible with 3-leg GrabiQ slings when single and dual fittings are mixed.
8. It is a common practice, when possible, to attach hooks so that latches point away from the master link.
9. Mixing GrabiQ fittings: Adding two additional chain links to the CL & CLD gives the same effective reach as CG & CGD. The MG & MGD have the same effective reach.
10. Normally, the master link will have a maximum of two connecting links, CG, CGD, CL, or CLD. The maximum number of connecting links that can ever be mounted on a single master link is three, when constructing a double leg basket.
11. A GrabiQ sling can never have more than four independent legs or two basket legs.
12. Attaching CG, CGD, CL, & CLD connectors to MF and MFX Master Links: Insert the connector onto the master link at the engineered flat. C-Connecting links are normally attached to the master link using the Dismountable Connecting Set type CS or the Permanent Connecting Set type CP. Each C-Connector includes one solid retainer pin, 1 larger rolled spring keeper pin and 1 smaller rolled spring keeper pin. When the dismountable connecting set is used the sling can be disassembled for repair. The permanent connecting set cannot be disassembled for repair.
    a. CS – First install the solid retainer pin. Second drive the smaller rolled spring keeper pin through the hole provided at a right angle to the solid retainer pin. The fit should be very snug.
    b. CP – First install the solid retainer pin. Second drive the larger rolled spring keeper pin into the same hole, directly behind solid retainer pin. The fit should be very snug.

This application/warning information apply to Gunnebo products only.
© 2023 The Crosby Group LLC. All Rights Reserved.

Technical Information

Chain Manufacturing - Quality and Strength Requirements

Chains are divided into grades based on minimum nominal breaking stress.

Chain Grade	Surface treatment	Code	Minimum breaking stress N/mm²	Load factors			Typical use
				WLL	MPF	Breaking force	
8	Yellow U Black B Hot Dipped Galvenized Z	KL	800	1	2.5	4	General lifting (KL), Container lashing (LL). Extra heavy towing (ML), Lashing (KL, LL). Fishing (KL, ML, LL)
		ML	800	-	1	4	
		LL	800	-	1	4	
10	Blue A	KL	1000	1	2.5	4	General lifting

Testing and Quality Control- GrabiQ & Classic Chain (Grade 10 & 8)

In each step of the manufacturing of the chain, our systematic quality monitoring will ensure the highest safety and the longest life span in the product. Here are some especially important aspects of quality:

Material

The incoming material is supplied with test certificates only from qualified manufacturers and according to our stated material specifications.

Manufacturing

During forming and welding, the operators continuously control that the links meet the specified dimensions both before and after welding.

Single link samples are continuously mandrel tested on the weld. Shape, dimensions and deburring are then inspected visually.

Sample lengths are heat treated and then destruction load tested. Following these tests, the chain is heat treated.

Hardening and tempering is carried out continuously in computer controlled induction furnaces with regular samplings.

Proof Force

The entire chain is test loaded. The manufacturing proof force for short link chain is 2.5 times the permitted working load limit. This gives the chain high safety in use. The chain is then visually inspected and cut into delivery lengths. A sample is taken from every length and tested to destruction. Dimensions and shape are also checked. All results are documented.

Marking and Traceability

The international standards for lifting chain require that the chain is marked with Grade and Manufacturers ID. On our chain we stamp “SWE - 10G - H - 10G - 4”, where the “H” and the “4” is the combination for the traceability code. In case of the unlikely event of chain failure, we can trace the specific chain link back to the very batch and raw material as well as the year and place of manufacture. Each individual delivery length also has its unique batch number.

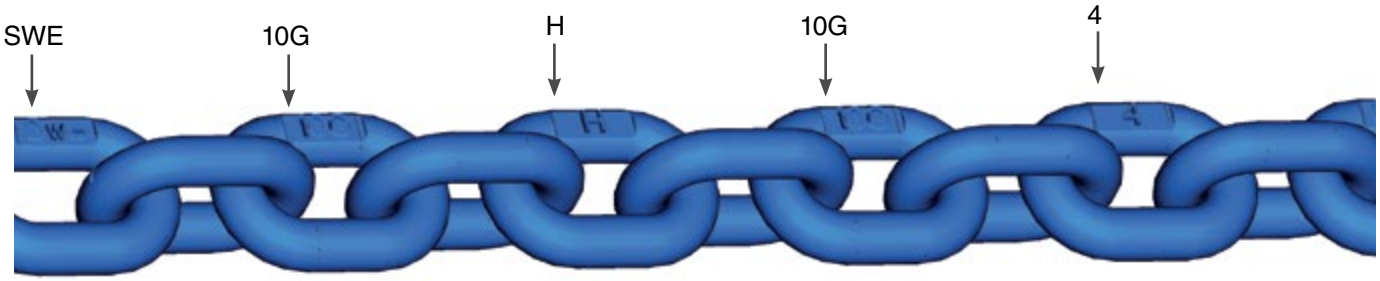

© 2023 The Crosby Group LLC. All Rights Reserved.

Use

- Never lift with a twisted chain.
- Use shortening hooks, knotting is not allowed.
- Use edge protectors to prevent sharp edges from damaging the chain.

See website or user instructions for assembly instructions.

Meets listed current specifications and standards at time of publication of this catalog.

Maintenance

Periodic thorough examination must be carried out at least every 12 months or more frequently according to local statutory regulations, type of use and past experience.

1. Overloaded chain slings must be taken out of service.
2. Chain and components including load pins which have been damaged, deformed, elongated, bent or showing signs of cracks
   or gouges shall be replaced. Carefully grind away small nicks and burrs.
3. Additional testing by magnetic particle inspection and/or proof loading at max. 2 x WLL may be carried out. The wear of the chain and component shall in no place exceed 10% of the original dimensions.
4. The chain link wear - max. 10% - is defined as the reduction of the mean diameter measured in two directions.

Severe Environment

Chain and components must not be used in alkaline (>pH10) or acidic conditions (<pH6). Comprehensive and regular examination must be carried out when used in severe or corrosive inducing environments. In uncertain situations consult your Gunnebo Industries dealer.

Extreme Temperature Conditions

The in service temperature effects the WLL as following :

Temperature (°C)	Reduction of WLL			
	Grade 10 chain (400)	Grade 10 chain (200)	Grade 10 components	Grade 8 chain & components
-40 to +200 °C	0 %	0 %	0 %	0 %
+200 to +300 °C	10 %	Not allowed	10 %	10 %
+300 to +400 °C	25 %	Not allowed	25 %	25 %

After short heat exposure, maximum one hour, the sling reverts to its full capacity. Upon return to normal temperature, the sling reverts to its full capacity within the above temperature range. Chain slings should not be used above or below these temperatures. **For chain grade 10(200) the maximum in service temperature is 200° C.**

Definitions

Proof force:
Each individual chain link is tested to the Manufacturing Proof Force (MPF) level before delivery. The MPF level is 2.5 times the WLL, equal to 62.5% of the Minimum Breaking Force.

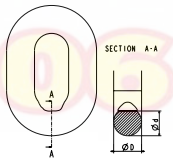

$$\frac{D+d}{2} > 0.9d_n$$

Breaking force (BF):
The highest static force a chain is exposed to during test loading before breaking.

Working load limit (WLL):
The maximum permitted load on a lifting chain under normal (vertical) lifting conditions.

Total ultimate elongation:
The elongation of the test item, relative to the original length, at the moment of breaking.

This application/warning information apply to Gunnebo products only.

© 2023 The Crosby Group LLC. All Rights Reserved.

Scope

This procedure is provided to give instructions for installation of wire rope into the Crosby® SB-427B Spelter Button using WIRELOCK® socketing material, or zinc socketing material. **Additionally, instructions regarding the reuse of spelter buttons are included.** The spelter button is part of a socket assembly that includes a socket basket, pin, cotter pin and button. If there are any questions regarding these instructions, please contact The Crosby Group LLC at (918) 834-4611 and request technical assistance.

NOTE: Many high performance ropes require special attention to prevent rope damage during cutting, seizing and brooming in preparation for the speltering operation. Attention to the special instructions is required to ensure proper termination efficiency. Consult rope manufacturer for specific details.

Installation

Install button on the rope so that the live end of the rope extends out of small inside diameter of the button. Broomed end of rope should be pulled into button and placed completely to the "MAX FILL" line marked on the button to ensure correct length of engagement with socketing material.

Socketing using WIRELOCK® Resin Material

Seizing, cleaning, brooming and preparation of wire rope and pouring of WIRELOCK® is to be carried out per instructions provided in the *Wire Rope End Terminations User's Manual,* and *WIRELOCK® Warnings and Application Instructions* located on the WIRELOCK® Product or in the Crosby General Catalog.

Socketing Using Zinc Spelter Material

Seizing, cleaning, brooming and preparation of the wire rope, and pouring of zinc is to be carried out in accordance with recommendations of the Crosby® *Wire Rope End Terminations Manual* or other approved procedures.

Note: Before operation of the wire rope assembly, it is recommended that all poured sockets, whether with zinc or resin, be proof loaded to seat the cone.

Reuse Of Crosby® Spelter Buttons

The following are general guidelines for the reuse of a Crosby® SB-427B Button. The use and inspection of used buttons are the responsibility of the user.

Procedure For Removing Spelter Cone

- Cut the rope close (½") to the nose end of the button and press the cone out of the button.
- For metallurgical, medical and environmental reasons, we do not recommend the use of heat to remove the spelter cone.
- However, if this is the only means available for removing the zinc cone, care should be taken not to exceed 450˚C (850˚F) surface temperature. The preferred method would be a slow heat in a temperature controlled oven. If a torch (rosebud)is used, the heated area shall be monitored with a Tempil stick or a temperature indicator to prevent localized heating from exceeding the 450˚C (850˚F) limit.
- To remove a WIRELOCK® cone, heat the surface of the button to 177˚C (350˚F) (do not exceed the 450˚C (850˚F) limit for any localized hot spot). Leave for 5-10 minutes, then drive the cone out with a hammer and drift.

Selection Of Buttons For Reuse

- Use only buttons that:
- Do not show discoloration from excessive heating.
- Do not show any signs of welding.
- Select only buttons that have been cleaned and have passed a Magnetic Particle Inspection by a qualified technician (level II ASNT-SNT-TC-1A-88) per ASTM E709. Acceptance criteria shall be per ASTM E125, Types II-VIII, Degree 1. No cracks are acceptable.
- Select only buttons that do not show any signs of overloading or wear.
- Select buttons that are free from nicks, gouges and abrasions. Indications may be repaired by lightly grinding until surfaces are smooth, provided they do not reduce the dimensions by more then 10% of the nominal catalog dimension.
- Select buttons that are not distorted, bent or deformed.

NOTE: Buttons having any of the indications as outlined above shall not be reused.

© 2023 The Crosby Group LLC. All Rights Reserved.

CROSBY® FORGED WIRE ROPE CLIP WARNINGS & APPLICATION INSTRUCTIONS

G-450
(Red-U-Bolt®)

⚠ WARNING

- **Failure to read, understand, and follow these instructions may cause death or serious injury.**
- **Read and understand these instructions before using clips.**
- **Match the same size clip to the same size wire rope.**
- **Prepare wire rope end termination only as instructed.**
- **Do not use with plastic coated wire rope.**
- **Apply first load to test the assembly. This load should be of equal or greater weight than loads expected in use. Next, check and retighten nuts to recommended torque (See Table 1).**
- **The reuse of clips is discouraged. As recommended by Crosby, have qualified personnel inspect product before use.**

Efficiency ratings for wire rope end terminations are based upon the minimum breaking force of wire rope. The efficiency rating of a properly prepared loop or thimble-eye termination for clip sizes 1/8" through 7/8" is 80%, and for sizes 1" through 3-1/2" is 90%.

The number of clips shown (see Table 1) is based upon using RRL or RLL wire rope, 6 x 19 or 6 x 37 Class, FC or IWRC; IPS or XIP, XXIP. If Seale construction or similar large outer wire type construction in the 6 x 19 Class is to be used for sizes 1 inch and larger, add one additional clip. If a pulley (sheave) is used for turning back the wire rope, add one additional clip.

The number of clips shown also applies to rotation-resistant RRL wire rope, 8 x 19 Class, IPS, XIP, XXIP sizes 1-1/2 inch and smaller; and to rotation-resistant RRL wire rope, 19 x 7 Class, IPS, XIP, XXIP sizes 1-1/2 inch and smaller.

For other wire rope manufacture designs not mentioned above, we recommend contacting Crosby Engineering at the address or telephone number on the back cover to ensure the desired efficiency rating.

The style of wire rope termination used for any application is the obligation of the user.

For OSHA (Construction) applications, see OSHA 1926.251.

1. Refer to Table 1 following these instructions. Turn back specified amount of rope from thimble or loop. Apply first clip one base width from dead end of rope. Apply U-Bolt over dead end of wire rope – live end rests in saddle (Never saddle a dead horse!). Use torque wrench to tighten nuts evenly, alternate from one nut to the other until reaching the recommended torque (See Figure 1).

Figure 1

2. When two clips are required, apply the second clip as near the loop or thimble as possible. Use torque wrench to tighten nuts evenly, alternating until reaching the recommended torque. When more than two clips are required, apply the second clip as near the loop or thimble as possible, turn nuts on second clip firmly, but do not tighten. (See Figure 2)

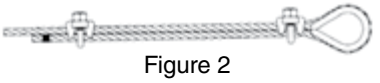

Figure 2

3. When three or more clips are required, space additional clips equally between first two – take up rope slack – use torque wrench to tighten nuts on each clip evenly, alternating from one nut to the other until reaching recommended torque (See Figure 3).

Figure 3

4. If a pulley (sheave) is used in place of a thimble, add one additional clip. Clip spacing should be as shown.

(See Figure 4)

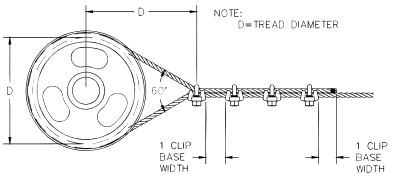

Figure 4

5. WIRE ROPE SPLICING PROCEDURES:

The preferred method of splicing two wire ropes together is to use inter-locking turnback eyes with thimbles, using the recommended number of clips on each eye (See Figure 5).

Figure 5

An alternate method is to use twice the number of clips as used for a turnback termination. The rope ends are placed parallel to each other, overlapping by twice the turnback amount shown in the application instructions. The minimum number of clips should be installed on each dead end (See Figure 6). Spacing, installation torque, and other instructions still apply.

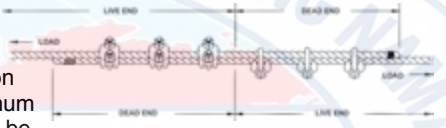

Figure 6

6. IMPORTANT

Apply first load to test the assembly. This load should be of equal or greater weight than loads expected in use. Next, check and use torque wrench to retighten nuts to recommended torque.

In accordance with good rigging and maintenance practices, the wire rope end termination should be inspected periodically for wear, abuse, and general adequacy.

Table 1

Rope Size (in)	Rope Size (mm)	Minimum No. of Clips	Amount of Rope to Turn Back in mm	* Torque in Nm
1/8	3-4	2	85	6.1
3/16	5	2	95	10.2
1/4	6-7	2	120	20.3
5/16	8	2	133	40.7
3/8	9-10	2	165	61.0
7/16	11-12	2	178	88
1/2	13	3	292	88
9/16	14-15	3	305	129
5/8	16	3	305	129
3/4	18-20	4	460	176
7/8	22	4	480	305
1	24-25	5	660	305
1-1/8	28-30	6	860	305
1-1/4	33-34	7	1120	488
1-3/8	36	7	1120	488
1-1/2	38-40	8	1370	488
1-5/8	41-42	8	1470	583
1-3/4	44-46	8	1550	800
2	48-52	8	1800	1017
2-1/4	56-58	8	1850	1017
2-1/2	62-65	9	2130	1017
2-3/4	68-72	10	2540	1017
3	75-78	10	2690	1627
3-1/2	85-90	12	3780	1627

If a pulley (sheave) is used for turning back the wire rope, add one additional clip. See Figure 4.

If a greater number of clips are used than shown in the table, the amount of turnback should be increased proportionately.

*The tightening torque values shown are based upon the threads being clean, dry, and free of lubrication.

This application/warning information apply to Crosby products only.

© 2023 The Crosby Group LLC. All Rights Reserved.

CROSBY® FIST GRIP® CLIPS

WARNINGS & APPLICATION INSTRUCTIONS

New Style Fist Grip®
3/16" - 5/8"

Fist Grip® Clips
3/4" - 1-1/2"

⚠ WARNING

- **Failure to read, understand, and follow these instructions may cause death or serious injury.**
- **Read and understand these instructions before using clips.**
- **Match the same size clip to the same size wire rope.**
- **Do not mismatch Crosby clips with other manufacturer's clips.**
- **Prepare wire rope end termination only as instructed.**
- **Do not use with plastic coated wire rope.**
- **Apply first load to test the assembly. This load should be of equal or greater weight than loads expected in use. Next, check and retighten nuts to recommended torque (See Table 1).**
- **The reuse of clips is discouraged. As recommended by Crosby, have qualified personnel inspect product before use.**

Efficiency ratings for wire rope end terminations are based upon the minimum breaking force of wire rope. The efficiency rating of a properly prepared loop or thimble-eye termination for clip sizes 1/8" through 7/8" is 80%, and for sizes 1" through 3-1/2" is 90%.

The number of clips shown (see Table 1) is based upon using RRL or RLL wire rope, 6 x 19 or 6 x 37 Class, FC or IWRC; IPS or XIP, XXIP. If Seale construction or similar large outer wire type construction in the 6 x 19 Class is to be used for sizes 1 inch and larger, add one additional clip. If a pulley (sheave) is used for turning back the wire rope, add one additional clip.

The number of clips shown also applies to rotation-resistant RRL wire rope, 8 x 19 Class, IPS, XIP, XXIP sizes 1-1/2 inch and smaller; and to rotation-resistant RRL wire rope, 19 x 7 Class, IPS, XIP, XXIP sizes 1-1/2 inch and smaller.

For other wire rope manufacture designs not mentioned above, we recommend contacting Crosby Engineering at the address or telephone number on the back cover to ensure the desired efficiency rating.

The style of wire rope termination used for any application is the obligation of the user.

For OSHA (Construction) applications, see OSHA 1926.251.

1. Refer to Table 1 in following these instructions. Turn back specified amount of rope from thimble or loop.

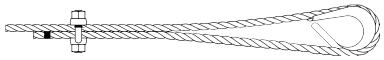

Figure 1

Apply first clip one base width from dead end of rope. Use torque wrench to tighten nuts evenly, alternating from one nut to the other until reaching the recommended torque (See Figure1).

2. When two clips are required, apply the second clip as near the loop or thimble as possible. Use torque wrench to tighten nuts evenly, alternating until reaching the recommended torque. When more than two clips are required, apply the second clip as near the loop or thimble as possible, turn nuts on second clip firmly, but do not tighten. (See Figure 2)

Figure 2

3. When three or more clips are required, space additional clips equally between first two – take up rope slack – use torque wrench to tighten nuts on each clip evenly, alternating from one nut to the other until reaching recommended torque (See Figure 3).

Figure 3

4. If a pulley (sheave) is used in place of a thimble, add one additional Fist Grip. Fist Grip spacing should be as shown. (See Figure 4)

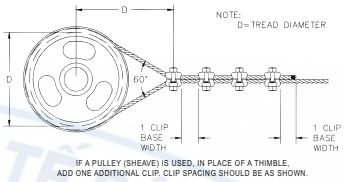

Figure 4

5. WIRE ROPE SPLICING PROCEDURES:

The preferred method of splicing two wire ropes together is to use inter-locking turnback eyes with thimbles, using the recommended number of clips on each eye (See Figure 5).

Figure 5

An alternate method is to use twice the number of clips as used for a turnback termination. The rope ends are placed parallel to each other, overlapping by twice the turnback amount shown in the application instructions. The minimum number of clips should be installed on each dead end (See Figure 6). Spacing, installation torque, and other instructions still apply.

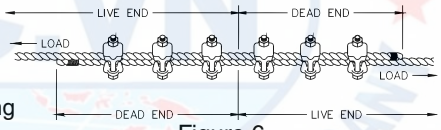

Figure 6

6. IMPORTANT

Apply first load to test the assembly. This load should be of equal or greater weight than loads expected in use. Next, check and use torque wrench to retighten nuts to recommended torque.

In accordance with good rigging and maintenance practices, the wire rope end termination should be inspected periodically for wear, abuse, and general adequacy.

Table 1

Clip Size/ Rope Size (in)	(mm)	Minimum No. of Clips	Amount of Rope to Turn Back in mm	* Torque in Nm
3/16	5	2	100	40.7
1/4	6-7	2	100	40.7
5/16	8	2	127	40.7
3/8	9-10	2	133	61.0
7/16	11-12	2	165	88.1
1/2	13	3	279	88.1
9/16	14-15	3	323	176
5/8	16	3	342	176
3/4	18-20	3	406	305
7/8	22	4	660	305
1	24-25	5	940	305
1-1/8	28-30	5	1040	488
1-1/4	32-34	6	1400	488
1-3/8	36	6	1400	488
1-1/2	38-40	7	1980	678

If a pulley (sheave) is used for turning back the wire rope, add one additional clip. See Figure 4.

If a greater number of clips are used than shown in the table, the amount of turnback should be increased proportionately.

*The tightening torque values shown are based upon the threads being clean, dry, and free of lubrication.

© 2023 The Crosby Group LLC. All Rights Reserved.

CROSBY TERMINATOR
WARNINGS & APPLICATION INSTRUCTIONS

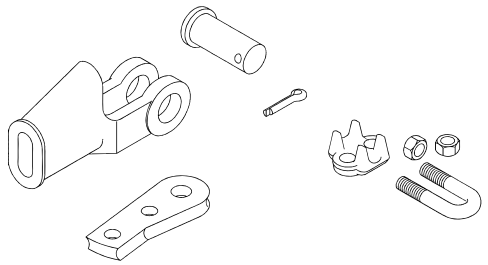

S-421T / US-422T
"TERMINATOR"

NOTE: The design of the basket for the S-421T 1-1/4" TERMINATOR Wedge Socket does not allow proper fit to the old style Crosby S-421W wedge (see Fig. 1). **Do not assemble or use.** The design of the basket for each US-422T TERMINATOR® Wedge Socket does not allow proper fit to the old style UWO-422 wedge (See Fig. 1). **Do not assemble or use.** All S-421T and US-422T TERMINATOR baskets are marked with a capital "T" or TERMINATOR.

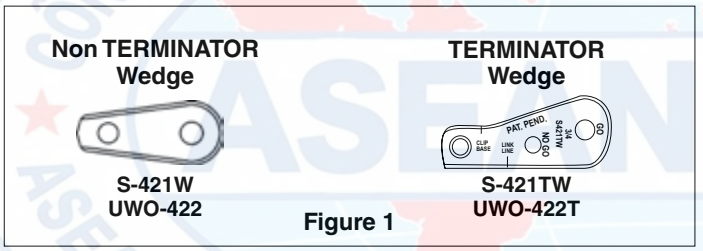

Figure 1

QUIC-CHECK® "Go" and "No-Go" features cast into wedge. The proper size wire rope is determined when the following criteria are met:
1. The wire rope shall pass thru the "Go" hole in the wedge.
2. The wire rope shall NOT pass thru the "No-Go" hole in the wedge.

QUIC-CHECK®

Important Safety Information – Read and Follow Inspection/Maintenance Safety

- Always inspect socket, wedge and pin before using.
- Do not use part showing cracks.
- Do not use modified or substitute parts.
- Repair minor nicks or gouges to socket or pin by lightly grinding until surfaces are smooth. Do not reduce original dimension more than 10%. Do not repair by welding.
- Inspect permanent assemblies annually, or more often in severe operating conditions.
- Do not mix and match wedges or pins between models or sizes.
- Always select the proper wedge and socket for the wire rope size.

Assembly Safety

- Use only with standard 6 to 8 strand wire rope of designated size. For intermediate size rope, use next larger size socket. For example: When using 9/16" diameter wire rope use a 5/8" size Wedge Socket Assembly. Welding of the tail on standard wire rope is not recommended. Seizing of the tail is preferred following the recommended practices of the wire rope manufacturer. The tail length of the dead end should be a minimum of 6 rope diameters but not less than 150 mm (See Figure 2).
- **To use with Rotation Resistant wire rope** (special wire rope constructions with 8 or more outer strands), ensure that the dead end is welded, brazed or seized before inserting the wire rope into the wedge socket to prevent core slippage or loss of rope lay. Seizing of the tail is preferred following the recommended practices of the wire rope manufacturer. The tail length of the dead end should be a minimum of 20 rope diameters but not less than 150 mm (See Figure 2).
- Properly match socket, wedge and clip (See Table 1) to wire rope size.
- Align live end of rope, with center line of pin.(See Figure 2)
- Secure dead end section of rope. (See Figure 2)
- Tighten nuts on clip to recommended torque. (See Table 1)
- Do not attach dead end to live end or install wedge backwards (See Fig. 3).
- Use a hammer to seat Wedge and Rope as deep into socket as possible before applying first load.

⚠ WARNING

- **Loads may slip or fall if the Wedge Socket is not properly installed.**
- **Load misapplied in direct contact with the wedge can dislodge the wedge and cause loss of load.**
- **A falling load can seriously injure or kill.**
- **Read and understand these instructions before installing the Wedge Socket.**
- **Do not side load the Wedge Socket.**
- **Apply first load to fully seat the Wedge and Wire Rope in the socket. This load should be of equal or greater weight than loads expected in use.**
- **Do not interchange wedges between S-421T and US422T or between sizes.**
- **Do not assemble an old style 30-32mm (1-1/4") S-421W wedge into an S-421T 30-32mm (1-1/4") TERMINATOR basket.**
- **Do not assemble an old style UWO-422 wedge into a US-422T TERMINATOR basket.**
- **The reuse of clips is discouraged. As recommended by Crosby, have qualified personnel inspect product before use.**

Figure 2

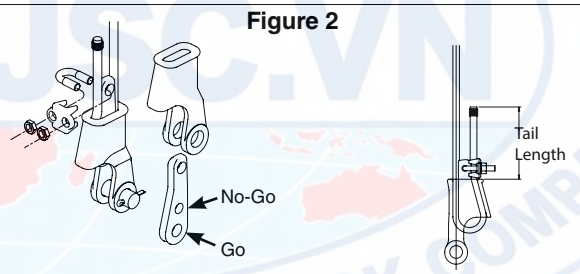

*Tail Length	
Standard 6 to 8 Strand Wire Rope	**Rotation Resistant Wire Rope**
A minimum of 6 rope diameters, but not less than 150mm.	A minimum of 20 rope diameters, but not less than 150mm.

TABLE 1

Rope Size (mm)	9-10	11-13	14-16	18-19	20-22	24-26	28	32
Clip Size (in)	3/8	1/2	5/8	3/4	7/8	1	1-1/8	1-1/4
* Torque NM	61	88	129	176	305	305	305	488

* The tightening torque values shown are based upon the threads being clean, dry, and free of lubrication.

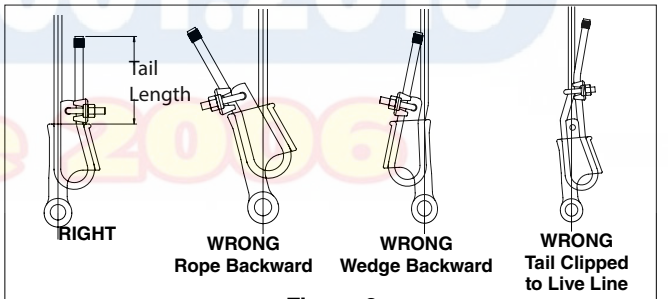

Figure 3

Operating Safety

- Apply first load to fully seat the Wedge and Wire Rope in the socket. This load should be of equal or greater weight than loads expected in use.
- Efficiency rating of the Wedge Socket termination is based upon the catalog breaking strength of Wire Rope. The efficiency of a properly assembled Wedge Socket is 80%.
- During use, do not strike the dead end section or wedge with any other elements of the rigging (Called two blocking).
- Do not allow a direct load to contact the wedge.

This application/warning information apply to Crosby products only.

© 2023 The Crosby Group LLC. All Rights Reserved.

SUPER TERMINATOR WEDGE SOCKET

WARNINGS & APPLICATION INSTRUCTIONS

US Patented 6,898,827.

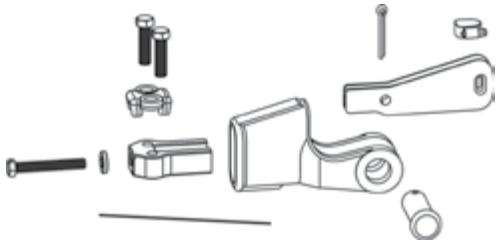

S-423T SUPER TERMINATOR

The intended purpose of the SUPER TERMINATOR is to offer a Wedge Socket termination, which when assembled properly with high performance, high strength, compacted strand, rotation resistant wire rope will achieve an 80% termination efficiency. Due to the unique construction of these ropes, Crosby cannot make a broad general statement that all current and future designed ropes, when properly assembled with a SUPER TERMINATOR, will achieve a minimum 80% termination efficiency. (To determine the efficiency rating for a specific rope, contact Crosby Engineering at 918-834-4611.)

The SUPER TERMINATOR may be purchased as a complete Wedge Socket assembly or the Wedge assembly may be purchased for retrofit onto your Crosby S-421TW wedge socket basket.

The Crosby S-423TW SUPER TERMINATOR Wedge is designed to be assembled only into the Crosby S-421T socket basket. For the 30-32mm S-423T, assemble only on to S-421T basket marked TERMINATOR.

Important Safety Information - Read and Understand

Inspection/Maintenance Safety

- Always inspect socket, wedge and pin before using.
- Do not use part showing cracks.
- Do not use modified or substitute parts.
- Repair minor nicks or gouges to socket or pin by lightly grinding until surfaces are smooth. Do not reduce original dimension more than 10%. Do not repair by welding.
- Inspect permanent assemblies annually, or more often in severe operating conditions.
- Do not mix and match wedges or pins between models or sizes.
- Always select the proper wedge and socket for the wire rope size.

Assembly Safety

- Properly match socket and wedge assembly to wire rope size.
- Ensure the dead end is properly seized before inserting the wire rope into the wedge socket basket. High performance, high strength, compacted strand, rotation resistant wire ropes are sensitive to seizing methods. For specific seizing procedures, contact the wire rope manufacturer.
- The tail length of the dead end should be a minimum of 20 rope diameters but not less than 254mm (See Figure 1).
- Mount wedge socket basket in vice.
- Insert live end of wire rope into wedge basket, aligning live end of rope with center line of pin. Make a loop and return. (See Figure 2).
- Pull on live line to remove excess out of loop, leaving enough room to properly insert wedge into basket. (See Figure 3).
- Secure rope to SUPER TERMINATOR Wedge with clamp (See Figure 4).
- Pull Wedge and rope into basket until tensioner bolt, with washers properly applied, can engage threads in nose of wedge. Auxillary power may be required to fully pull wedge and rope into basket. (See Figure 5).
- Use torque wrench to tighten tensioner bolt to recommended torque value, properly seating wedge and rope into basket. Reference Table 1 for recommended Torque in N-m.
- Secure dead end section of rope with clip base. Tighten bolts to recommended torque values (See Table 1).
- Properly install wire to securely lock tensioner bolt to tensioner. (See Figure 6).
- Do not attach dead end to live end or install wedge backwards. (See Figure 7).

Operating Safety

- Proper application of the Super TERMINATOR eliminates the "first load" requirement of conventional wedge socket terminations.
- Efficiency rating of the Wedge Socket termination is based upon the catalog breaking strength of Wire Rope. The efficiency of a properly assembled Super Terminator on most high performance, high strength, compacted strand, rotation resistant ropes will achieve 80% of catalog breaking strength of rope, depending on the unique construction of these ropes. (To determine the efficiency rating for a specific rope, contact Crosby Engineering at 918-834-4611.)
- During use, do not strike the dead end section or wedge with any other elements of the rigging (Called two blocking).
- The SUPER TERMINATOR wedge socket may also be used with standard 6 to 8 strand and rotation resistant wire rope (special wire rope constructions with 8 or more strands).
- Do not allow direct load to contact the wedge.

⚠ WARNING

- **Loads may slip or fall if the Wedge Socket is not properly installed.**
- **A falling load can seriously injure or kill.**
- **Load misapplied in direct contact with the wedge can dislodge the wedge and cause loss of load.**
- **Read and understand these instructions before installing the Wedge Socket.**
- **Do not side load the Wedge Socket.**
- **Apply recommended torque to tensioner and clip bolts, and properly install wire to securely lock tensioner bolt to tensioner.**
- **Do not assemble the S-423 Wedge in any brand or model socket basket other than the Crosby S-421T TERMINATOR.**
- **The size is marked on the socket basket and wedge, do not interchange wedge between sizes.**
- **The reuse of clips is discouraged. As recommended by Crosby, have qualified personnel inspect product before use.**

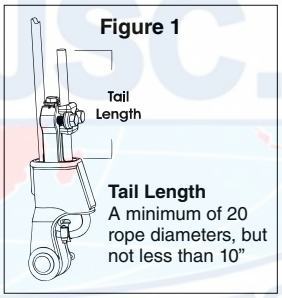

Figure 1

Tail Length
A minimum of 20 rope diameters, but not less than 10"

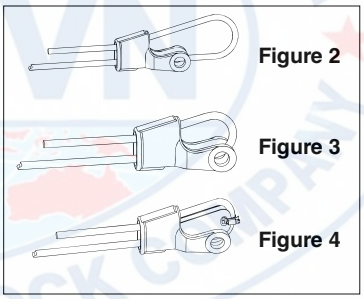

Figure 2

Figure 3

Figure 4

TABLE 1
S-423T Torque Value Table

Wedge Size (mm)	Tensioner Bolt Torque Nm*	Clip Bolts Torque Nm*
15.9	149	129
19.1	203	176
22.2	515	305
25.4	515	305
28.6	814	305
31.8	1220	488

* The tightening torque values shown are based upon the threads being clean, dry, and free of lubrication.

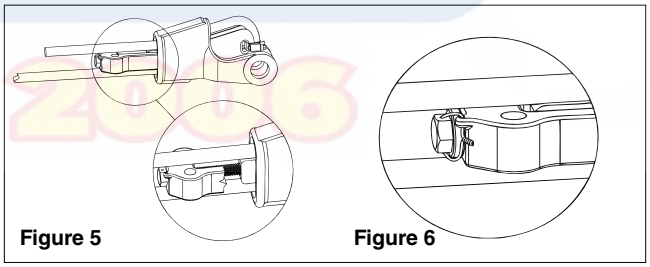

Figure 5 Figure 6

Figure 7

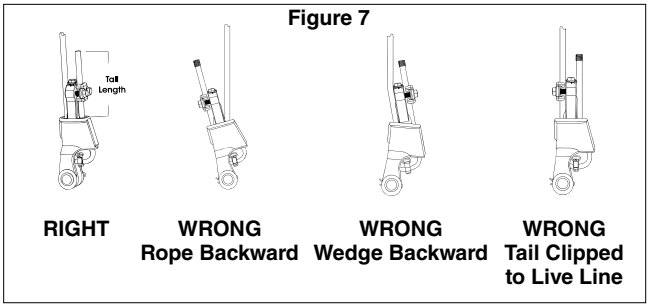

© 2023 The Crosby Group LLC. All Rights Reserved.

WEDGE SOCKET

WARNINGS & APPLICATION INSTRUCTIONS

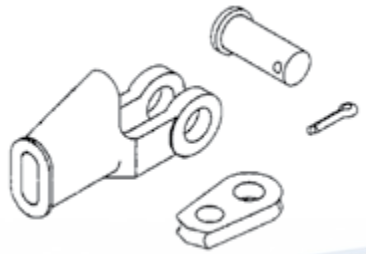

S-421 / US-422

Important Safety Information - Read and Follow Inspection/Maintenance Safety

- Always inspect socket, wedge and pin before using.
- Do not use part showing cracks.
- Do not modify or substitute parts.
- Repair minor nicks or gouges to socket or pin by lightly grinding until surface are smooth. Do not reduce original dimension more than 10%. Do not repair by welding.
- Inspect permanent assemblies annually, or more often in severe operating conditions.
- Do not mix and match wedges or pins between models or sizes.
- Always select the wedge and socket for the wire rope size.

Assembly Safety

- Use only with standard 6 to 8 strand wire rope of designated size. For intermediate size rope, use next larger size socket. For example: When using 14 mm diameter wire rope use a 16 mm size Wedge Socket Assembly. Welding of the tail on standard wire rope is not recommended. Seizing of the tail is preferred following the recommended practices of the wire rope manufacturer. The tail length of the dead end should be a minimum of 6 rope diameters but not less than 150 mm.
- Align live end of rope, with center line of pin. (See Figure 1)
- Secure dead end section of rope. (See Figure 1)
- DO NOT ATTACH DEAD END TO LIVE END. (See Figure 1)
- Use a hammer to seat Wedge and Rope as deep into socket as possible before applying first load.
- To use with Rotation Resistant wire rope (special wire rope constructions with 8 or more outer strands) ensure that the dead end is welded, brazed or seized before inserting the wire rope into wedge socket to prevent core slippage or loss of rope lay. The tail length of the dead end should be a minimum of 20 rope diameters but not less than 150mm. (Figure 1)

⚠ WARNING

- **Loads may slip or fall if the Wedge Socket is not properly installed.**
- **Load misapplied in direct contact with the wedge can dislodge the wedge and cause loss of load.**
- **A falling load can seriously injure or kill.**
- **Read and understand these instructions before installing the Wedge Socket.**
- **Do not side load the Wedge Socket.**
- **Do not interchange Crosby wedge socket, wedge or pin with non Crosby Wedge socket, wedge or pin.**
- **Apply first load to fully seat the Wedge and Wire Rope in the socket. This load should be of equal or greater weight than loads expected in use.**
- **Do not interchange wedge between S-421 and US-422 or between sizes.**
- **The reuse of clips is discouraged. As recommended by Crosby, have qualified personnel inspect product before use.**

Figure 1

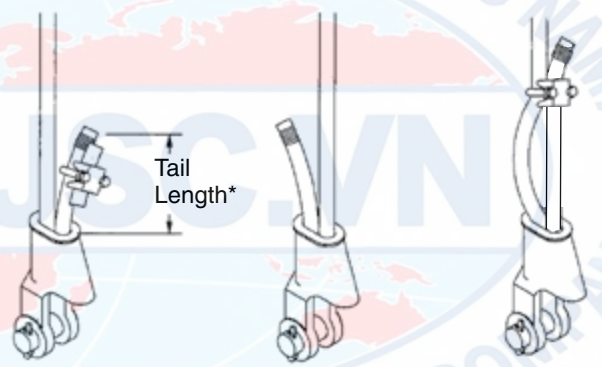

RIGHT **WRONG** **WRONG**

*Tail Length
Standard 6 to 8 strand wire rope
A minimum of 6 rope diameters, but not less than 150mm
(i.e. - For 25mm rope: Tail Length = 25mm x 6 = 150mm)

Rotation Resistant Wire Rope
A minimum of 20 rope diameters, but not less than 150mm
(i.e. - For 25mm rope: Tail Length = 25mm x 20 = 500mm)

Operating Safety

- Apply first load to fully seat the Wedge and Wire Rope in the socket. This load should be of equal or greater weight than loads expected in use.
- Efficiency rating of the Wedge Socket termination is based upon the catalog breaking strength of Wire Rope. The efficiency of properly assembled Wedge Socket is 80%.
- During use, do not strike the dead end section with any other elements of the rigging (Called two-blocking).
- Do not allow a direct load to contact the wedge.

This application/warning information apply to Crosby products only.

© 2023 The Crosby Group LLC. All Rights Reserved.

WIRELOCK®

WARNINGS & APPLICATION INSTRUCTIONS

⚠ WARNING

- **WIRELOCK® should be stored in a cool dry place (10°C to 24°C/ 50°F to 75°F)**
- **Incorrect use of WIRELOCK® can result in an unsafe termination which may lead to serious injury, death, or property damage.**
- **Do not use WIRELOCK® with stainless steel rope in salt water environment applications.**
- **Use only soft annealed iron wire for seizing.**
- **Do not use any other wire (copper, brass, stainless, etc.) for seizing.**
- **Never use an assembly until the WIRELOCK® has gelled and cured.**
- **Remove any non-metallic coating from the broomed area.**
- **Non Crosby sockets with large grooves need to have those grooves filled before use with WIRELOCK®.**
- **Read, understand, and follow these instructions and those on product containers before using WIRELOCK®.**

The following simplified, step-by-step instructions should be used only as a guide for experienced, trained users. ***For full information, consult the Wire Rope End Terminations Manual, API (American Petroleum Institute) Recommended Practice 9B, ISO Standards, Wire Rope Manufacturers Catalogs, and Wire Rope Sling Users Manual.***

STEP 1 – SOCKET SELECTION

1. **WIRELOCK®** is recommended for use with Crosby 416-417 Spelter Sockets. Structural strand requires a socket with the basket length approximately 5 times the strand diameter or fifty (50) times the wire diameter, whichever is greater, to achieve 100% efficiency. Consult The Wire Rope End Terminations Manual for proper selection of Wire Rope or Structural Strand sockets.
2. For use with sockets other than Crosby 416-417 consult the socket manufacturer or Crosby Engineering.
3. Sockets used with **WIRELOCK®** shall comply with Federal or International (CEN, ISO) Standards.
4. **WIRELOCK®**, as with all socketing media, depends upon the wedging action of the cone within the socket basket to develop full efficiency. A rough finish inside the socket may increase the load at which seating will occur. Seating is required to develop the wedging action.

STEP 2 – MEASURE AND SEIZE

The rope ends to be socketed should be of sufficient length so that the end of the unlaid wires (from the strands) will be at the top of the socket basket. Seizing should be placed at a distance from the end equal to the length of the basket of the socket.

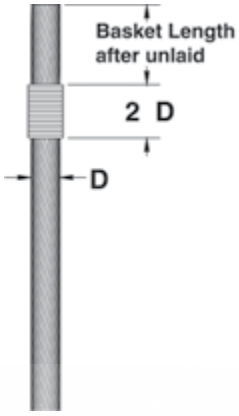

STEP 3 – BROOMING

1. Unlay the individual strands and fully broom out the wires of the wire rope and IWRC as far as the seizing. The wires should be separated but not straightened.
2. Cut out any fiber core.
3. Unlay the individual wires from each strand, including the IWRC, completely, down to the seizing.
4. Remove any plastic material from broomed area.

STEP 4 – CLEANING

1. The method of cleaning will depend on the lubriant and/or coating on the wire.
2. The methods and materials used for cleaning should comply with the current EPA or local regulations.
3. Consult your Wire Rope supplier or Wire Rope manufacturer for recommended material and methods. Follow the solvent supplier's recommendations for cleaning the broomed end.
4. Allow the broom to dry thoroughly.

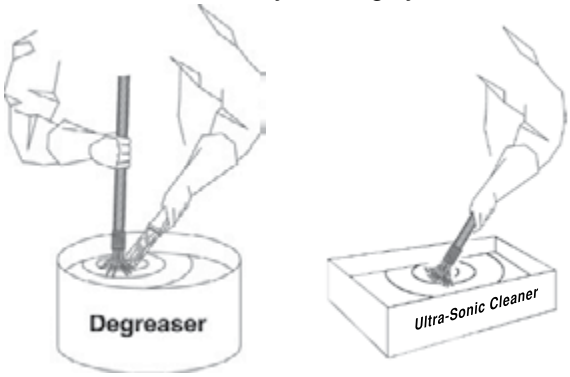

© 2023 The Crosby Group LLC. All Rights Reserved.

STEP 5 – POSITIONING OF SOCKET

1. Position socket over the broom until it reaches the seizing on the wire rope. The wires should be LEVEL with the top of the socket basket.
2. Clamp rope and socket vertically ensuring alignment of their axes.
3. **CAUTION: DO NOT USE OVERSIZED SOCKETS FOR WIRE ROPE.**

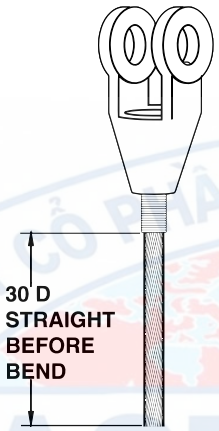

STEP 6 – SEAL SOCKET

Seal the base of the socket with putty or plasticine to prevent leakage of the **WIRELOCK®**.

STEP 7 – WIRELOCK® KITS

1. **WIRELOCK®** kits are pre-measured and consist of two (2) containers – one (1) with resin and one (1) with granular compound.
2. Use the complete kit – **NEVER MIX LESS THAN THE TOTAL CONTENTS OF BOTH CONTAINERS.**
3. Each kit has a shelf life clearly marked on each container and this must be observed. **NEVER USE OUT-OF-DATE KITS.**

⚠ CAUTION

- **WIRELOCK® resin, in liquid state, is flammable.**
- **Chemicals used in this product can give off toxic fumes and can burn eyes and skin.**
- **Never use out-of-date material.**
- **Use only in well-ventilated work areas.**
- **Never breathe fumes directly or for extended time.**
- **Always wear safety glasses to protect eyes.**
- **Always wear gloves to protect hands.**
- **Avoid direct contact with skin anywhere.**

STEP 8 – MIXING AND POURING

1. Mix and pour **WIRELOCK®** within the temperature range of 48° to 110° F. Booster kits are available for reduced temperatures.
2. Wirelock is set up to gel in 20 minutes at 65° F. For every 18° F rise in temperature the gel time willl halve. At 83° F the gel time will be 10 minutes and at 101° F it will be 5 minutes. To give extra working time of pot life it is worth considering refrigerating the kits for two hours prior to mixing and pouring. The socket should also be as cool as possible - out of direct sunlight, as an example.
3. Pour all the resin into a container containing all the granular compound and mix thoroughly for two (2) minutes with a flat paddle.
4. The **WIRELOCK®** will turn a green blue color. If it does not turn a green blue after mixing, DO NOT USE.
5. Immediately after mixing, slowly pour the mixture down one side of the socket until the socket basket is full.
6. Check for leakage at nose of socket, add putty if required.

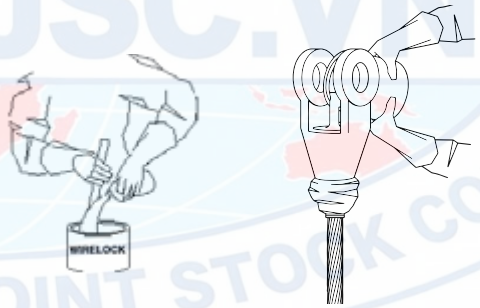

STEP 9 – CURING

1. **WIRELOCK®** will gel in approximately 20 minutes, in a temperature range 65° F (18° C) to 75° F (24° C).
2. The socket must remain undisturbed in the vertical position for an additional ten (10) minutes after gel is complete.
3. The socket will be ready for service 60 minutes after gelling.
4. Never heat sockets to accelerate gel or curing.

STEP 10 – RE-LUBRICATION

Re-lubricate wire rope as required.

STEP 11 – PROOF LOADING

Whenever possible, the assembly should be proof loaded. In accordance with ASME B30.9.

ALTERNATE SEIZING AND BROOMING METHOD

Reference the ***Wire Rope End Terminations User's Manual*** from Crosby for an alternative socketing method.

This application/warning information apply to Crosby products only.

© 2023 The Crosby Group LLC. All Rights Reserved.

NATIONAL DIE INFORMATION

⚠ CAUTION

- **Improper die selection could result in significant loss of efficiency in the termination.**

National dies and die holders are made solely for swaging properly designed fittings on wire rope, and any other uses are prohibited.

The swaging operation results in a high degree of cold metal flow. The movement that occurs between the fitting and the dies will cause wear of the dies. Therefore, to prolong the life of the dies, it is important to always lubricate die faces and cavities between each pass with a light weight oil or high pressure grease.

When scores appear in the die cavities, the dies should be removed from service.

NEVER EXCEED THE WORKING LOAD LIMIT OF DIES OR DIE HOLDERS.

All National Standard dies 1/4" through 1" include an open channel die cavity and a tapered die cavity in the same die block.

Dies for S-505 Standard Steel Sleeves (Flemish Eyes)

Die sizes for 1/4" through 1"

Swaging 1/4" through 1" Standard Steel S-505 sleeves on Flemish Eye terminations requires the use of the taper cavity only. Refer to page 24 of the *Wire Rope End Termination User's Manual* for proper die selection.

Die sizes for 1-1/8" and above

Swaging 1-1/8" and larger Standard Steel S-505 sleeves on Flemish Eye terminations requires using 2 sets of open channel dies (1st stage and 2nd stage) for each size. Beginning with the 1st stage die and finishing with the 2nd stage die will achieve proper after swage dimensions. Dies for S-505 Sleeves 1-1/8" and larger are single cavity with open channel. Refer to page 24 of the *Wire Rope End Termination User's Manual* for proper die selection.

Using S-505 Sleeves with Metric Ropes

Although Crosby National S-505 Standard Steel sleeves are designed to be used with most metric ropes, there are selected "intermediate" sizes of metric ropes that when swaged in standard National dies utilizing Crosby National S-505 sleeves do not achieve required after swage dimensions and efficiencies. To ensure all 505 sleeves achieve the required efficiency when used with metric ropes, Crosby provides special National swaging dies to be used in conjunction with selected size metric ropes. These new dies will produce the required efficiencies and after swage dimensions.

The table found on pge 46 of this catalog or page 25 of the *Wire Rope End Termination User's Manual* identifies the new dies that are required to properly swage the selected intermediate size wire ropes not covered in the standard product offering found on page 45 of this catalog or page 24 of the manual.

Dies for 6mm through 26mm (except 12mm, 20mm and 24mm)

Swaging on 6mm through 26mm metric ropes for Flemish Eye slings requires the selection of the proper S-505 Standard Steel sleeve and the use of the tapered cavity only. Refer to page 24 of the *Wire Rope End Termination User's Manual* for proper sleeve and die selection.

Dies for 12mm, 20mm and 24mm

Swaging on 12mm, 20mm and 24mm metric ropes for Flemish Eye slings requires the selection of the proper S-505 Standard Steel sleeve and the use of both the open cavity and tapered cavity in special dies. Refer to page 25 of the *Wire Rope End Termination User's Manual* for proper sleeve and die selection.

Dies for 28mm and larger

Swaging on 28mm and larger metric ropes for Flemish Eye slings requires the selection of the proper S-505 Standard Steel sleeve and the use of 2 sets of open channel dies (1st stage and 2nd stage) for each size. Beginning with the 1st stage die and finishing with the 2nd stage die will achieve proper after swage dimensions. Dies for S-505 sleeves 28mm and larger are single cavity with open channel. Refer to page 24 of the *Wire Rope End Termination User's Manual* for proper sleeve and die selection.

Important: If the specific size metric rope required is not listed on page 24 of the *Wire Rope End Termination User's Manual* refer to Intermediate Metric Die Chart on page 25 of the manual for proper sleeve and die selection.

Dies for QUIC-PASS® Swaging System – 1/4" through 1-1/2"

The *QUIC-PASS®* swaging system allows "Flemish style" wire rope terminations to be swaged in only two passes. This is accomplished while maintaining currently published efficiency ratings and utilizing National Swage S-505 Standard "COLD TUFF"® Steel Sleeves.

The special design of the *QUIC-PASS®* dies allows the swaging process to be completed in just two passes, resulting in a 50-75% reduction in the number of passes required with conventional swaging systems. Unlike standard round dies, the *QUIC-PASS®* dies close completely with each pass, resulting in an increase in overall swaging process efficiencies (the job can be performed quicker), a reduction in the complexity of swaging (the concern for excess flashing between dies has been eliminated) and a reduction in training time needed for operators (more user friendly).

The finished sleeve has a "Hex" appearance that provides a *QUIC-CHECK®* look to determine if the termination has been swaged and provides a flat surface that allows for ease of I.D. stamping on the finished sleeve. Refer to page 24 of the *Wire Rope End Termination User's Manual* for proper die selection.

© 2023 The Crosby Group LLC. All Rights Reserved.

Dies for S-501 & S-502 Swage Sockets

Swaging all S-501 & S-502 Swage Sockets requires the use of single cavity die. This is a special die designed with a relief for swage sockets and extra length to swage the full length of the shank. Refer to pages 36 and 37 of the *Wire Rope End Termination User's Manual* for proper die selection.

Swage Sockets for Spiral Strand Rope
Our tests indicate that if the spiral strand is 1 x 19 or greater, and the ultimate strength does not exceed Table 1 of ASTM A586, you can use dies for size swage sockets up to the 1-1/4". For sizes greater than 1-1/4" the following will apply:

1. Closed S-502 Sockets: One (1) socket size larger with shank modified for actual strand diameter 1-3/8" through 2".
2. Open S-501 Sockets: One (1) socket size larger with shank modified for actual strand diameter 1-3/8" through 2".
3. If the strand is of greater strength than Table 1 of ASTM A586 or has less metallic area, we must recalculate the design and test for adequacy.

Dies for S-506 Turnback Sleeves

Turnback eye terminations using 5/16" through 1" S-506 Sleeves utilize the S-505 Standard Steel Sleeve die (1st Stage open channel die only). The 1-1/4" S-506 Sleeve utilizes the 1-3/8" socket (S-501 and S-502) die. Refer to page 46 of the *Wire Rope End Termination User's Manual* for proper die selection.

Dies for S-409 Buttons

Buttons are swaged in open channel dies. Refer to page 42 of the *Wire Rope End Termination User's Manual* or on page 47 of this catalog for proper die selection.

Specific recommended swaging practices can be found in each product section of this catalog. The proper die selection and the recommended maximum after swage dimensions are referenced in the section of this catalog that contains the product you are swaging. This information can also be found in the National Swage Die Guide, or by referring to the National Swage Die Chart.

Dies and die adapters to fit other type swaging machines are available upon request (Refer to page 19 of the *Wire Rope End Termination User's Manual*).

Single Cavity Die

Two Cavity Die

Never use dies that are cracked, worn or abraided (galled).

This application/warning information apply to Crosby products only.

© 2023 The Crosby Group LLC. All Rights Reserved.

After Swage Inspection Procedures

⚠ WARNING

- **Read, understand, and follow these instructions before using the National QUIC-PASS® Swaging System.**
- **Improper after swage dimensions can result in sling failure resulting in property damage, serious injury or death.**
- **Always gauge or measure the after swage dimensions to ensure proper sling performance.**
- **Using National Swaging System with ropes and termination styles other than shown in these procedures may reduce the performance of the termination and lead to premature failure.**
- **When using rope constructions other than shown in this procedure, the termination must be destructive tested and documented to prove adequacy of the assembly to be manufactured.**
- **The QUIC-PASS® Swaging System is designed only for "Flemish Eye" terminations using National S-505 Standard Steel Sleeves.**
- **The QUIC-PASS® Swaging System is not designed for Cable-Laid wire rope slings.**

Checking Swaging Dimensions

One of the important considerations in producing a quality termination is the overall diameter of the fitting after the swaging process is complete. Since all dies wear, and the swaged fitting used in terminations has spring back, the results of swaging should be checked periodically to determine the wear condition of the die as well as to ensure the fitting is swaged to proper dimensions.

Key Facts About After Swage Dimensions:

1. In addition to worn dies, not achieving the proper after swage dimension can also be due to the die not being fully closed during swaging. Dies showing excessive wear should be replaced.
2. The effective swaging that dies can accomplish stops when the die lands touch each other. Any continued swaging adds needless wear and strain on the dies and swaging machine.
3. By placing a light oil on the die faces and in the cavity, the dies will be lubricated as well as protected.
4. The oozing of the oil from the faces of the dies as they touch will indicate when the dies have closed. At this point, stop the swaging cycle.
5. Additional swaging adds needless wear and strain to the dies and swaging machine.
6. Never use dies that are cracked, worn or abraded (galled).
7. The Crosby Group does not recommend the checking of die dimensions as an acceptable method of determining the quality of a swage sleeve, button, ferrule, or socket.
8. It is our recommendation that the checking of the after swage dimension of the swaged fitting is the most accurate indicator of a properly swaged termination. Measuring the die cavity only is not an acceptable process control check.
9. If the die cavity wears, the dies are not closed completely during swaging. If an inadequate number of presses are used, it could be quickly identified by checking the after swage dimension of the part.
10. Swaging Machine not producing sufficient tonnage will affect after swage dimensions.

No-Go Gauge Information

To assist in checking the after swage dimensions of the fitting, the Crosby Group provides the National No-Go Gauges. When used correctly the National No-Go Gauges can determine if the fittings were swaged to the proper diameter. We would recommend that all Crosby products or product swaged in Crosby dies be checked with the proper gauge to determine the acceptability of the swaging process.

- Gauges are made of hardened alloy steel and machined to strict tolerances.
- Gauge can be used to verify that all fittings have been swaged properly.
- After swage dimensions not within the maximum limits may result from worn dies or improper swaging techniques.
- Other type gauges are available upon request.
- National No-Go Gauges are available for a variety of products (See Table 1).
- **No-Go Gauges and QUIC-PASS® No-Go Gauges are not interchangeable.**

Table 1 - Standard Round No-Go Gauges

Fitting	Size	Part No.
505 Sleeve	1/4 - 7/8	1095512
505 Sleeve	1 - 1-1/2	1095521
505 Sleeve	1-3/4	1095530
505 Sleeve	2	1095549
505 Sleeve	2-1/4	1095558
505 Sleeve	2-1/2	1095567
505 Sleeve	2-3/4	1095576
505 Sleeve	3	1095585
505 Sleeve	3-1/2	1095594
505 Sleeve	3-3/4	1095601
505 Sleeve	4	1095610
501/502 Socket	1/4 - 1	1095647
501/502 Socket	1-1/8 - 1-3/4	1095656
501/502 Socket	2	1095665

Using No-Go Gauges

When swaged properly, the gauge will go up and down (see Figure 1) and around the full length of the fitting (see Figure 2).

For the proper after swage dimensions, see the section in this publication for the specific product you are swaging.

Figure 1

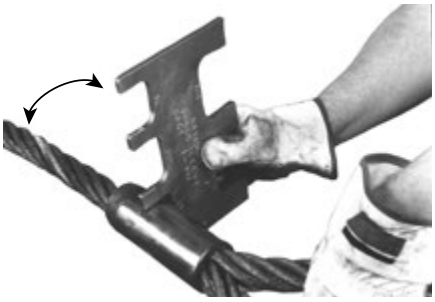

Figure 2

© 2023 The Crosby Group LLC. All Rights Reserved.

QUIC-PASS® No-Go Gauges

As a further aid, QUIC-PASS® No-Go gauges are available for checking the sleeve's dimensions after swaging is complete.

- Gauges are made of hardened alloy steel and machined to strict tolerances.
- Gauge can be used to verify that all sleeves have been swaged properly.
- "After Swage" dimensions not within the maximum limits may result from worn dies or improper swaging techniques.
- **No-Go Gauges and QUIC-PASS® No-Go Gauges are not interchangeable.**

QUIC-PASS® No-Go Gauges	
Sleeve and Size	**Stock No.**
No-Go Gauge for S-505 1/4" - 7/8"	1923705
No-Go Gauge for S-505 1" - 1-1/4"	1923712
No-Go Gauge for S-505 1-3/8" - 1-1/2"	1923714

QUIC-PASS® Maximum After Swage Dimensions

Size (in)	Maximum "After Swage" Dimension (in)
1/4	0.565
5/16 - 3/8	0.769
7/16 - 1/2	1.016
9/16 - 5/8	1.247
3/4	1.475
7/8	1.738
1	1.955
1-1/8	2.170
1-1/4	2.405
1-3/8	2.610
1-1/2	2.835

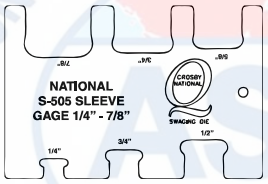

Stock No. 1923705

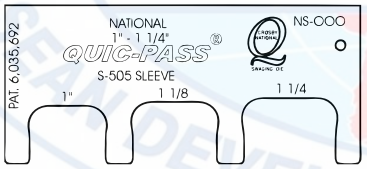

Stock No. 1923712

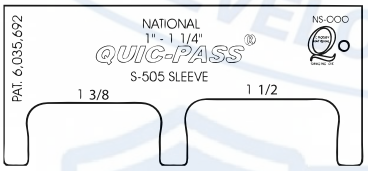

Stock No. 1923714

Use a National QUIC-PASS® No-Go Gauge to check the after swage dimensions to ensure that it has been swaged to the proper dimension. When swaged properly, the gauge will slide up and down the full length of the sleeve on all three sets of opposing flats.

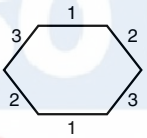

Important Safety Information

- **Crosby does not recommend** a "Texas Tuck" style termination with Crosby National S-505 "COLD TUFF®" Standard Steel Sleeves.
- Only Crosby National S-505 "COLD TUFF®" Standard Steel Sleeves are recommended when using the QUIC-PASS® Swaging System.
- National S-505 Standard Steel Sleeves, when used with the QUIC-PASS® Swaging System, are only recommended for use with one (1) part 6 X 19 or 6 X 37, IPS or XIP (EIP), XXIP (EEIP), RRL, IWRC rope.
- The condition of the swaging machine can cause sleeve "After Swage" size not to be within the proper dimensions. Example: worn bushings, loose tie rods, loose die holders, misaligned platens, worn pins, worn linkage, etc.
- Swaging dies being worn, damaged, misused, or undersized can cause sleeve "After Swage" size not to be within the proper dimension.
- Swaging die holders excessively worn, damaged, misused or loose can cause sleeve "After Swage" size not to be within the proper dimension. Only use QUIC-PASS® dies and die holders inspected and properly secured in National swaging machines.
- Always refer to Warning and Application information found in this catalog and *Wire Rope End Terminations User's Manual.*

This application/warning information apply to Crosby products only.

© 2023 The Crosby Group LLC. All Rights Reserved.

CROSBY® THIMBLE EYE BUNDLE CLIPS

WARNING & APPLICATION INSTRUCTIONS

G-461

The Bundle Clip is utilized in a choker hitch application to maintain the shape of bundled packages after a load is placed. The Bundle Clip is attached to live line of choker hitch, but it is never to be used as a button or ferrule to carry a load in the primary load path.

Certain conditions (such as extreme variation of the choke size) or improper installation may cause the eye of the choke hitch to disengage from the Bundle Clip and allow the eye to seat away from or below the Bundle Clip (see Figure 3). If this occurs, the Bundle Clip must be removed and installed in the proper position.

The Bundle Clip is sized to provide a grip to the live rope without reducing the efficiency of a choker hitch. This grip is adequate to keep the bundle clip in position.

These instructions are for use with thimble eyes formed with RRL or RLL wire rope, 6 x 19 or 6 x 36 Class, FC or IWRC; IPS or XIP, XXIP, and a Crosby Thimble. For other classes of wire rope not mentioned above, we recommend contacting Crosby Engineering.

For Soft Eye applications see the Crosby G-460 Soft Eye Bundle Clip.

For OSHA (Construction) applications, see OSHA 1926.251.

1. The eye of the sling must be in the choked position (around live line). Choker hitch applications should comply with the requirements of ASME B30.9 Slings. Install the choker hitch to provide a minimum choke angle of 120 degrees (See Figure 1). Refer to ASME B30.9 for required de-rating of the sling if choke angle is less than 120 degrees.

Figure 1

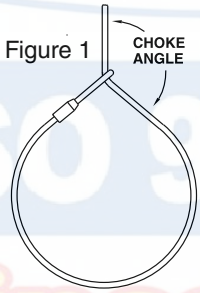

2. Before installing Bundle Clip, apply initial load by lifting the bundle and clearing the support, producing a tight choke. Repeat as necessary until the bundle package is in the most compact position (See figure 2, Loaded). **Keep hands and feet from under load.**

Figure 2

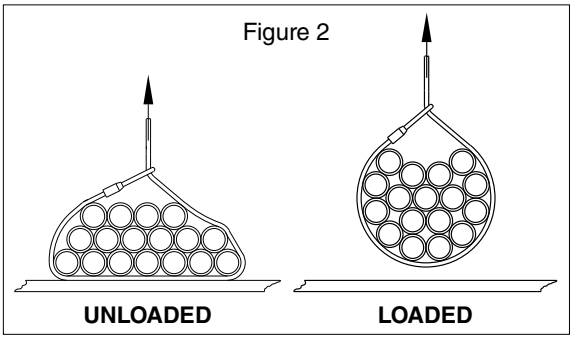

⚠ WARNING

- **Failure to read, understand, and follow these instructions may cause death or serious injury.**
- **A falling load may seriously injure or kill.**
- **Read and understand these instructions before using clips.**
- **Failure to properly position the Bundle Clip may allow the load to slip and fall.**
- **Match the same size clip to the same size wire rope.**
- **Install Bundle Clip only as instructed.**
- **Do not use with plastic coated wire rope.**
- **Do not use for lifting personnel.**

3. After initial loading, install the Bundle Clip. The orientation of the Bundle Clip on the live line is not an important consideration, as the assembly is of adequate size to prevent passage through proper size Crosby Thimble and next larger size Thimble. Insert U-bolt through the Bundle Clip. Properly position the clip base over the U-bolt and install nuts (See Figure 3). Use torque wrench to tighten evenly, alternating from one nut to the other until the bundle stop bottoms out on the clip base, and the recommended torque is reached (See Table 1).

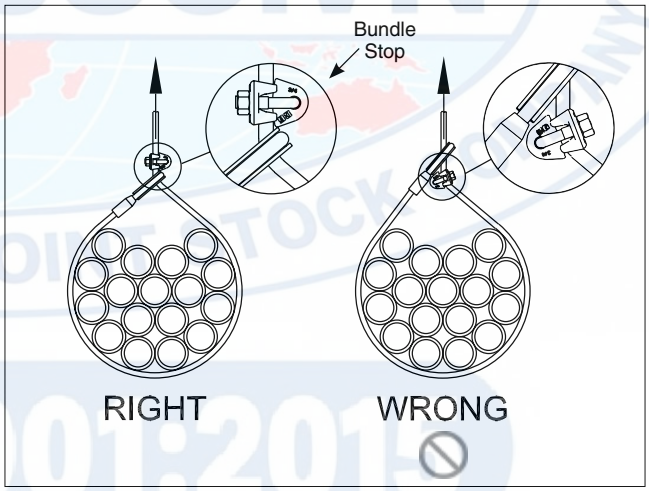

Figure 3

Table 1 – Recommended Torque

Clip Size	Rope Size (mm)	Torque (Nm)
5/8	16	129
3/4	19	176
7/8	22	305

4. Before each lift, check to ensure that the choke eye has not slipped from the Bundle Clip. Repeat Step 3 if necessary.
5. When disconnecting, the load should be clear of the stable support (See figure 2, Loaded). Remove Bundle Clip. Stay clear of the load as the bundle is lowered and the load is removed from the sling.

In accordance with good rigging and maintenance, the wire rope sling should be inspected periodically for wear, abuse, and general adequacy.

© 2023 The Crosby Group LLC. All Rights Reserved.

CROSBY® SOFT EYE BUNDLE CLIPS

WARNING & APPLICATION INSTRUCTIONS

G-460

The Bundle Clip is utilized in a choker hitch application to maintain the shape of bundled packages after a load is placed. The Bundle Clip is attached to live line of choker hitch, but it is never to be used as a button or ferrule to carry a load in the primary load path.

Certain conditions (such as extreme variation of the choke size) or improper installation may cause the eye of the choke hitch to disengage from the Bundle Clip and allow the eye to seat away from or below the Bundle Clip (see Figure 3). If this occurs, the Bundle Clip must be removed and installed in the proper position.

The Bundle Clip is sized to provide a grip to the live rope without reducing the efficiency of a choker hitch. This grip is adequate to keep the bundle clip in position. The eye may pull free of the Bundle Clip if not positioned properly.

These instructions are for use with soft eyes (no thimble) formed with RRL or RLL wire rope, 6 x 19 or 6 x 36 Class, FC or IWRC; IPS or XIP, XXIP. For other classes of wire rope not mentioned above, we recommend contacting Crosby Engineering.

For Thimble Eye applications see the Crosby G-461 Thimble Eye Bundle Clip.

For OSHA (Construction) applications, see OSHA 1926.251.

1. The eye of the sling must be in the choked position (around live line). Choker hitch applications should comply with the requirements of ASME B30.9 Slings. Install the choker hitch to provide a minimum choke angle of 120 degrees (See Figure 1). Refer to ASME B30.9 for required de-rating of the sling if choke angle is less than 120 degrees.

Figure 1

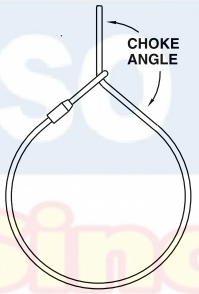

2. Before installing Bundle Clip, apply initial load by lifting the bundle and clearing the support, producing a tight choke. Repeat as necessary until the bundle package is in the most compact position (See figure 2, Loaded). **Keep hands and feet from under load.**

Figure 2

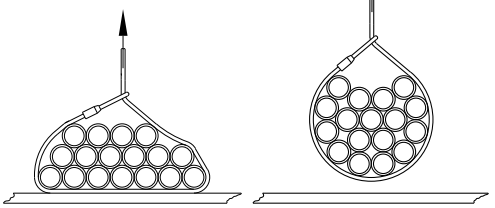

⚠ WARNING

- **Failure to read, understand, and follow these instructions may cause death or serious injury.**
- **A falling load may seriously injure or kill.**
- **Read and understand these instructions before using clips.**
- **Failure to properly position the Bundle Clip may allow the load to slip and fall.**
- **Do not use the Bundle Clip to form the choke hitch (See Figure 3).**
- **Match the same size clip to the same size wire rope.**
- **Install Bundle Clip only as instructed.**
- **Do not use with plastic coated wire rope.**
- **Do not use for lifting personnel.**

3. After initial loading, install the Bundle Clip in proper orientation, with curved portion (Bundle Clip tip) over the eye of the sling. Insert U-bolt through the Bundle Clip. Properly position the clip base over the U-bolt and install nuts (See Figure 3). Use torque wrench to tighten evenly, alternating from one nut to the other until the curved portion bottoms out on the clip base, and the recommended torque is reached (See Table 1).

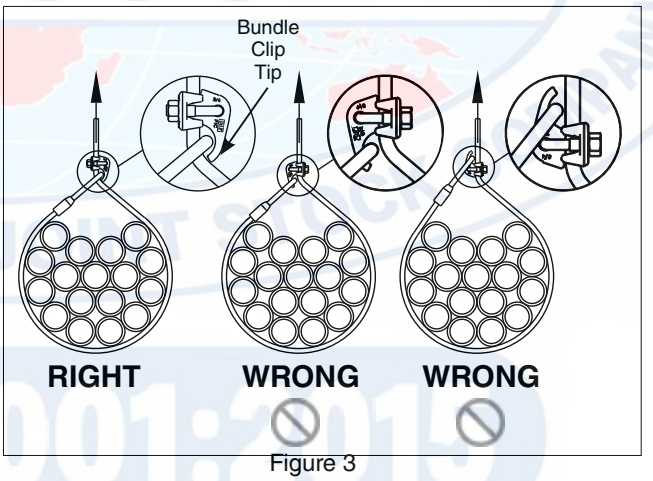

Figure 3

Table 1 – Recommended Torque

Clip Size	Rope Size (mm)	Torque (Nm)
5/8	16	129
3/4	19	176
7/8	22	305

4. Before each lift, check to ensure that the choke eye has not slipped from the Bundle Clip tip. Repeat Step 3 if necessary.
5. When disconnecting, the load should be clear of the stable support (See figure 2, Loaded). Remove Bundle Clip. Stay clear of the load as the bundle is lowered and the load is removed from the sling.

In accordance with good rigging and maintenance, the wire rope sling should be inspected periodically for wear, abuse, and general adequacy.

This application/warning information apply to Crosby products only.

© 2023 The Crosby Group LLC. All Rights Reserved.

Crosby® ROV HOOKS

WARNINGS & APPLICATION INSTRUCTIONS

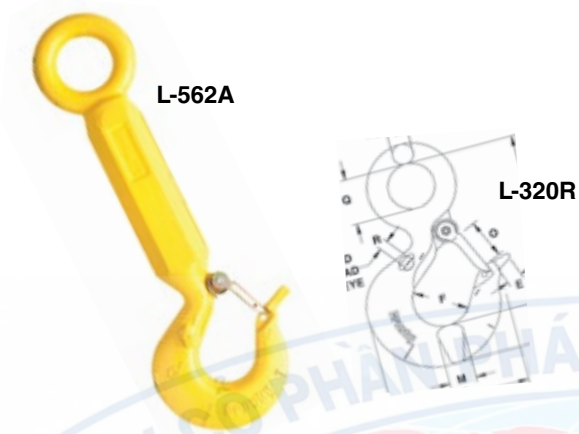

QUIC-CHECK® Hoist hooks incorporate markings forged into the product which address two (2) **QUIC-CHECK®** features:

Deformation Indicators – Two strategically placed marks, one just below the shank or eye and the other on the hook tip, which allows for a **QUIC-CHECK®** measurement to determine if the throat opening has changed, thus indicating abuse or overload.

To check, use a measuring device (i.e., tape measure) to measure the distance between the marks. The marks should align to either an inch or half-inch increment on the measuring device. If the measurement does not meet criteria, the hook should be inspected further for possible damage.

Angle Indicators – Indicates the maximum included angle which is allowed between two (2) sling legs in the hook. These indicators also provide the opportunity to approximate other included angles between two sling legs.

IMPORTANT SAFETY INFORMATION - READ & FOLLOW

- A visual periodic inspection for cracks, nicks, wear, gouges and deformation as part of a comprehensive documented inspection program, should be conducted by trained personnel in compliance with the schedule in ASME B30.10 and/or regulations governing your industry or jurisdiction.
- For ROV hooks used in frequent load cycles or pulsating loads, the ROV hook components (hoist hook, eye bolt and hexagon body) and their threads should be periodically inspected by Magnetic Particle or Dye Penetrant (Disassembly will be required).
- Disassemble the eye bolt and shank hook from hexagon body (sizes up to and including 31.5t WLL). This requires removing the 2 spiral pins and unscrewing the eye bolt and hoist hook.
- Always use new spiral pins when re-assembling the ROV Hook.
- After reassembly, Crosby recommends a proof test equal to 2 times the ROV hook's stated WLL.
- Never use a hoist hook whose throat opening has been increased, or whose tip has been bent more than 10 degrees out of plane from the hook body, or is in any other way distorted or bent. Note: A latch will not work properly on a hook with a bent or worn tip.
- Never use a hoist hook that is worn beyond the limits shown in Figure 1.
- Remove from service any hoist hook with a crack, nick or gouge. Hoist hooks with a nick or gouge shall be repaired by grinding lengthwise, following the contour of the hook, provided that the reduced dimension is within the limits shown in Figure 1. Contact Crosby Engineering to evaluate any cracks.

⚠ WARNING

- **Loads may disengage from hook if proper procedures are not followed.**
- **A falling load may cause serious injury or death.**
- **Hook must always support the load. The load must never be supported by the latch.**
- **Read and understand these instructions before using hook and latch.**

Figure 1

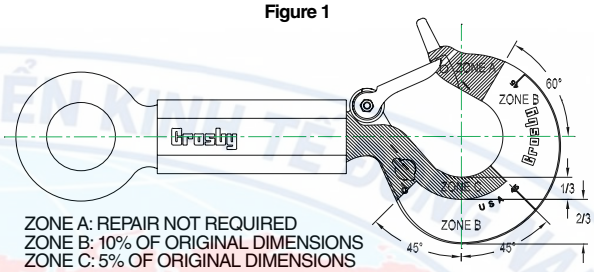

ZONE A: REPAIR NOT REQUIRED
ZONE B: 10% OF ORIGINAL DIMENSIONS
ZONE C: 5% OF ORIGINAL DIMENSIONS
ZONE D: 5% OF ORIGINAL DIMENSIONS

- Never repair, alter, rework, or reshape an ROV hook by welding, heating, burning, or bending.
- Remove from service a hoist hook or eye bolt which has threads corroded more than 20% of the hexagon body engagement length.
- Never side load, back load, or tip load the hoist hook, eye bolt or hexagon body. (Side loading, back loading and tip loading are conditions that damage and reduce the capacity of the ROV hook). (See Figure 2.)
- The use of a latch may be mandatory by regulations or safety codes. Follow the regulations governing your industry or jurisdiction.

Figure 2

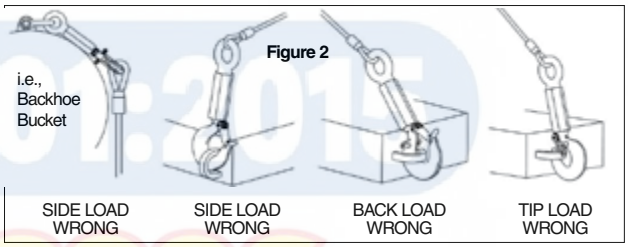

- Always make sure the hook supports the load. The latch must never support the load.
- When placing two (2) sling legs in hook, make sure the angle from the vertical to the outermost leg is not greater than 45 degrees, and the included angle between the legs does not exceed 90 degrees.
- See ANSI/ASME B30.10 "Hooks" for additional information.
- Remove from service any eye bolt with a crack, nick or gouge. Eye bolt with a nick or gouge shall be repaired by grinding lengthwise, following the contour of the eye bolt, provided that the reduced dimension is no greater than 5% of original dimension. Contact Crosby Engineering to evaluate any cracks.

© 2023 The Crosby Group LLC. All Rights Reserved.

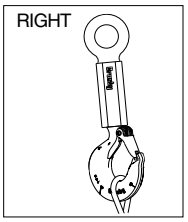

Figure 3

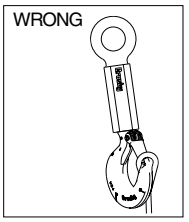

Figure 4

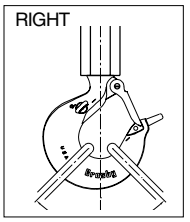

Figure 5

- Never use an eye bolt if eye or shank is bent or elongated.
- Remove from service the hexagon body if internal threads are corroded beyond 20% of the eye bolt or hoist hook shank's threaded engagement lengths.
- Hexagon body with nicks or gouges may be repaired by grinding lengthwise.
- Inspect the spiral pin holes on the hoist hook, hexagon body and eye bolt. At assembly, the spiral pin must engage with a press fit.

Warning and Application Instructions for Crosby® Hook Latch

Important Safety Information – Read & Follow

- Always inspect hook and latch before using.
- Never use a latch that is distorted or bent.
- Always make sure spring will force the latch against the tip of the hook.
- Always make sure hook supports the load. The latch must never support the load. (See Figures 1 & 2)
- When placing two (2) sling legs in hooks, make sure the angle between the legs is less the 90° and if the hook or load is tilted, nothing bears against the bottom of this latch. (See Figures 3 & 4)
- Latches are intended to retain loose sling or devices under slack conditions.
- Latches are not intended to be an anti-fouling device.

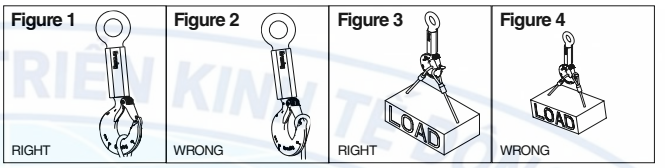

⚠ WARNING

- **Loads may disengage from hook if proper procedures are not followed.**
- **A falling load may cause serious injury or death.**
- **See OSHA Rule 1926.550 (g)(4)(iv)(B) for personnel hoisting for cranes and derricks. Only a Crosby or McKissick hook with a PL Latch attached and secured with bolt, nut and cotter (or Crosby Toggle Pin) or a Crosby hook with a S-4320 Latch attached and secured with a cotter pin, or a Crosby SHUR-LOC® hook in the locked position may be used for any personnel hoisting. A hook with a Crosby SS-4055 latch attached shall NOT be used for personnel lifting.**
- **Hook must always support the load. The load must never be supported by the latch.**
- **Read and understand these instructions before using hook and latch.**

This application/warning information apply to Crosby products only.

© 2023 The Crosby Group LLC. All Rights Reserved.

Typical Application

The S-237 and S-238 connectors have been designed to easily adapt to other Crosby fittings to develop complete systems for high performance Synthetic Slings.

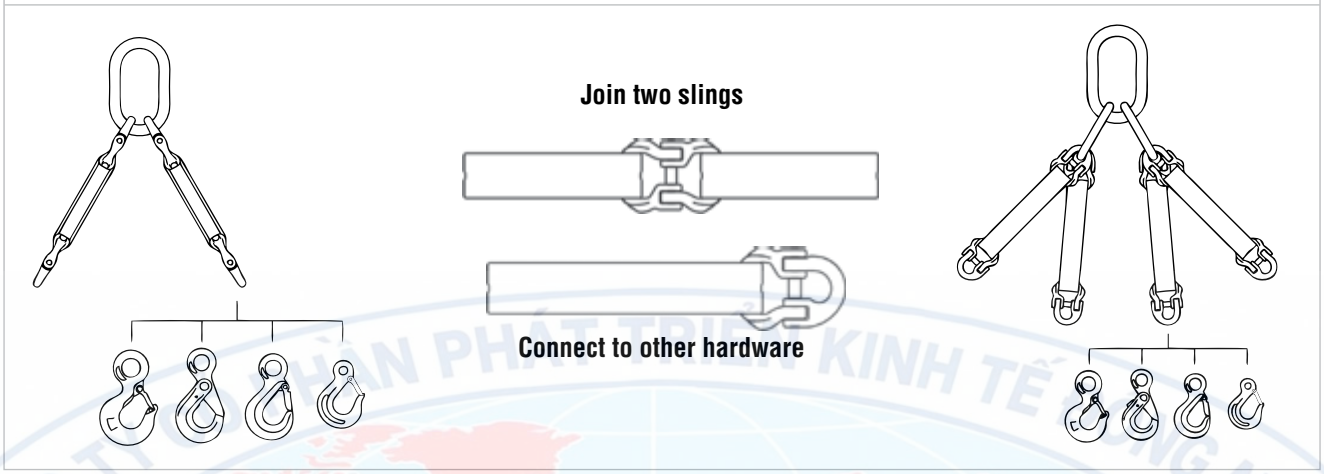

These easy-to-use charts are designed to allow you to quickly determine the Crosby Fitting required for your high performance sling.

Single Leg Sling

S-237 Frame	Working Load Limit 4:1 (kg)*	Working Load Limit 5:1 (kg)*	A-1337 Lok-A-Loy (mm)	A-342 (mm)	A-344 (mm)	L-320A L-320AN† (t)	L-320A L-320AN† Frame	S-1316 (mm)	S-315A (mm)	L-1327 (mm)
5	2834	2268	10	25	22	†7	JA	16	16	16
10	5670	4536	16	25	22	†7	JA	16	16	16
15	8505	6804	20	32	25	†11	KA	19	–	19
25	14175	11340	22	38	32	†15	LA	22	–	22
30	17010	13607	22	38	32	†15	LA	22	–	22
40	22680	18145	25	44	–	†22	NA	25	–	–
60	34020	27215	32	51	–	30	OA	–	–	–

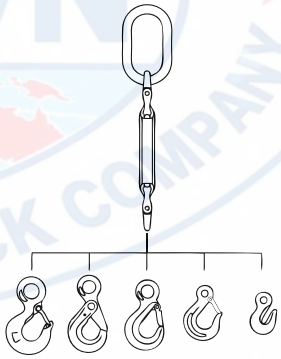

* Ultimate load is 5 times the Working Load Limit. † L-320AN Style Hook.

Double Leg Sling

S-237 Frame	Working Load Limit 4:1 (kg)*	Working Load Limit 5:1 (kg)*	A-1337 Lok-A-Loy (mm)	A-342 (mm)	A-344 (mm)	L-320A L-320AN† (t)	L-320A L-320AN† Frame	S-1316 (mm)	S-315A (mm)	L-1327 (mm)
5	2834	2268	10	32	32	†7	JA	16	16	16
10	5670	4536	16	32	32	†7	JA	16	16	16
15	8505	6804	20	38	–	†11	KA	19	–	19
25	14175	11340	22	44	–	†15	LA	22	–	22
30	17010	13607	22	44	–	†15	LA	22	–	22
40	22680	18145	25	51	–	†22	NA	25	–	–
60	34020	27215	32	57	–	30	OA	–	–	–

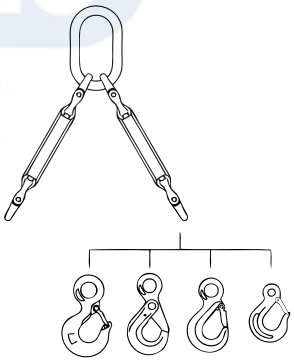

* Ultimate load is 5 times the Working Load Limit. † L-320AN Style Hook.

For Triple and Quad leg slings, contact Crosby Engineering at (918) 834-4611

© 2023 The Crosby Group LLC. All Rights Reserved.

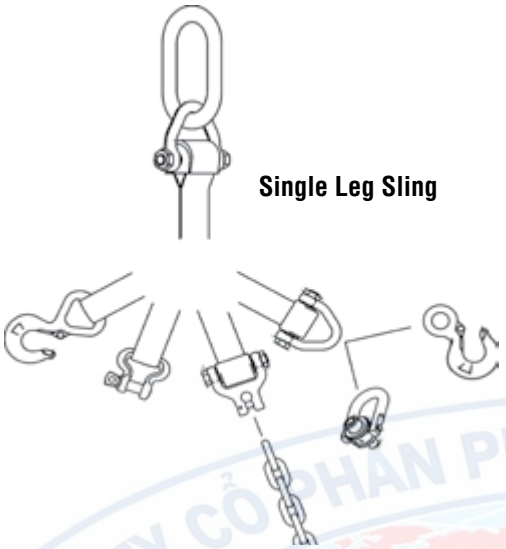

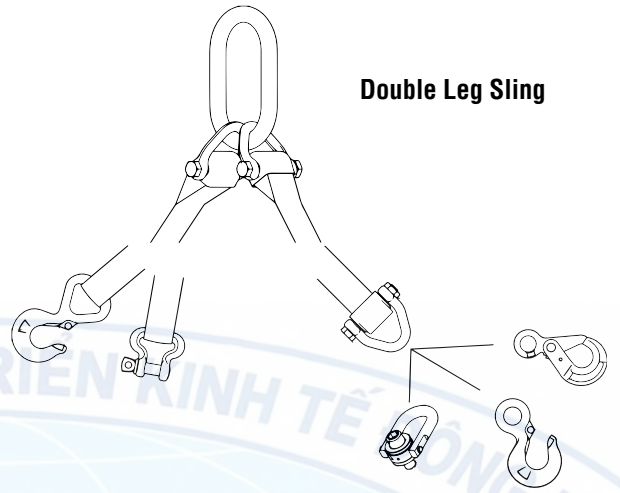

These easy-to-use charts are designed to allow you to quickly determine the fitting required to create the Web Sling or Round Sling you need.

Single and Double Leg Slings Component Recommendations based on Type III, (Eye & Eye), Class 7, 2 Ply web slings.

				S-280 Web Connector S-281 Web Sling Shackle				S-280 Web Connector			
	Web Sling										
Round Sling Size (No.)	Web Width (mm)	Eye Width (mm)	Ply.	S-280 S-281 Working Load Limit (t)	Web Sling Hook WSL-320 (t)	Spectrum 8® Chain Size (in) – (mm)	Eye Hoist Hook L-320AN (t)	Eye SHUR-LOC® S-1316 (mm)	Swivel Hoist Ring HR-125 (kg)	Master Link A-342 Single Leg (mm)	Master Link A-342 Double Leg (mm)
1 & 2	50	50	2	2.95	3	3/8 - 10	3.2	13	3000	16	19
3	75	35	2	4.08	5	1/2 - 13	5.4	16	4200	19	25
4	100	50	2	5.67	—	5/8 - 16	8	16	7000	25	25
5 & 6	150	75	2	7.70	—	—	11.5	—	11000	25	32

Triple and Quad Leg Slings Component Recommendations based on Type III, (Eye & Eye), Class 7, 2 Ply web slings.

				S-280 Web Connector S-281 Web Sling Shackle				S-280 Web Connector			
	Web Sling										
Round Sling Size (No.)	Web Width (mm)	Eye Width (mm)	Ply.	S-280 S-281 Working Load Limit (t)	Web Sling Hook WSL-320 (t)	Spectrum 8® Chain Size (in) – (mm)	Eye Hoist Hook L-320AN (t)	Eye SHUR-LOC® S-1316 (mm)	Swivel Hoist Ring HR-125 (kg)	Master Link A-342 Triple Leg (mm)	Master Link A-342 Quad Leg (mm)
1 & 2	50	50	2	2.95	3	3/8 - 10	3.2	13	3000	25	25
3	75	35	2	4.08	5	1/2 - 13	5.4	16	4200	25	32
4	100	50	2	5.67	—	5/8 - 16	8	16	7000	32	38
5 & 6	150	75	2	7.70	—	—	11.5	—	11000	38	44

This application/warning information apply to Crosby products only.

© 2023 The Crosby Group LLC. All Rights Reserved.

Easily Integrated into Synthetic Sling System

The Synthetic Sling Saver shackles line has been designed to easily adapt Crosby Sling fittings in the development of complete systems for synthetic slings.

Single Leg Slings

Sling Saver Shackle							LOK-A-LOY® Link* A-1337				
Web Sling Eye Width (mm)	Working Load Limit (t)	Sling Saver Shackle Spool S-255 (mm)	Sling Saver Shackle Link Plate S-256 (mm)	Eye Hoist Hook L-320AN† L-320A (t)	Alloy Master Link A-342 (mm)	Master Link Assy. A-345 (mm)	Sling Hook L-1327 (mm)	Eye Grab Hook A-1328 (mm)	Eye Foundry Hook A-1329 (mm)	Eye SHUR-LOC® S-1316A (mm)	Eye Latching S-315A (mm)
25	3-1/4	25	25	†5.4	19	—	10	10	10	10	10
35	6-1/2	35	35	†8	25	—	16	16	16	16	16
50	8-3/4	50	50	†11.5	25	—	16	16	16	16	16
75	12-1/2	75	75	†16	32	—	19	19	19	—	19
100	20-1/2	100	100	†22	44	—	—	19	—	19	—
125	35	125	125	37	51	—	—	19	—	—	—
150	50	150	150	60	57	—	—	19	—	—	—

* LOK-A-LOY® size same as hook size. † New 320N Eye Hook.

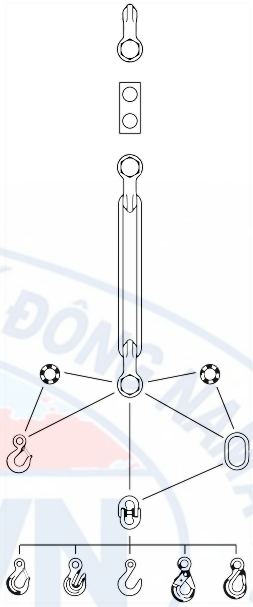

Single Leg Sling

Double Leg Slings

Sling Saver Shackle							LOK-A-LOY® Link* A-1337				
Web Sling Eye Width (mm)	Working Load Limit (t)	Sling Saver Shackle Spool S-255 (mm)	Sling Saver Shackle Link Plate S-256 (mm)	Eye Hoist Hook L-320AN† L-320A (t)	Alloy Master Link A-342 (mm)	Master Link Assy. A-345 (mm)	Sling Hook L-1327 (mm)	Eye Grab Hook A-1328 (mm)	Eye Foundry Hook A-1329 (mm)	Eye SHUR-LOC® S-1316A (mm)	Eye Latching S-315A (mm)
25	3-1/4	25	25	†5.4	19	25	10	10	10	10	10
35	6-1/2	35	35	†8	25	32	16	16	16	16	16
50	8-3/4	50	50	†11.5	25	32	16	16	16	16	16
75	12-1/2	75	75	†16	32	38	19	19	19	—	19
100	20-1/2	100	100	†22	44	44	—	—	—	—	—
125	35	125	125	37	51	—	—	—	—	—	—
150	50	150	150	60	57	—	—	—	—	—	—

* LOK-A-LOY size same as hook size. † New 320N Eye Hook.

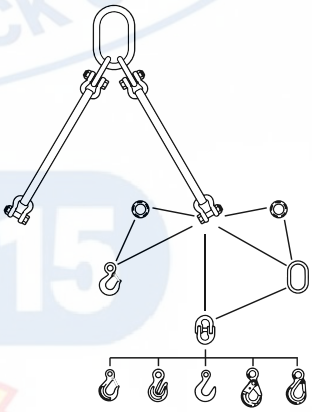

Double Leg Sling

© 2023 The Crosby Group LLC. All Rights Reserved.

Inspection Information

WEB SLINGS
Shall not be constricted or bunched between the ears of a clevis or shackle, or in a hook.

ROUND SLINGS
Shall not be constricted or bunched between the ears of a clevis or shackle, or in a hook.

The opening of fittings shall be proper shape and size to ensure that the fitting will seat properly on the round sling.

When a round sling is used with a shackle, it is recommended that it be used (rigged) in the bow of the shackle.

SYNTHETIC SLINGS RATED LOAD
Folding, bunching or pinching of synthetic slings, which occurs when used with shackles, hooks or other application will reduce the rated load.

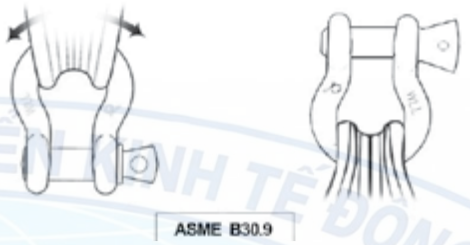

When connecting Web or Round Slings, use conventional fittings with:
1. Large Radius. 2. Straight Pins. 3. Pads or use special fittings designed for Synthetic Slings.

SYNTHETIC SLING CONNECTIONS AND HITCHES

WEB SLING IDENTIFICATION INCLUDES:

SLING TYPE:
TC – TRIANGLE CHOKER
TT – TRIANGLE TRIANGLE
EE – EYE AND EYE
EN – ENDLESS

NUMBER OF PLIES: 1 OR 2
WEBBING GRADE: 9 OR 6
SLING WIDTH (INCH)

EE 2-9 04 x 12 ← **SLING LENGTH (INCH)**

ROUND SLING IDENTIFICATION INCLUDES:

SLING NUMBER: 1-13
Sling numbers are for reference only. some round slings have different ratings.

SLING COLOR: PURPLE, GREEN, YELLOW, TAN, RED, WHITE, BLUE, ORANGE

Sling color is not followed by all manufacturers, and some colors have more than one rated load.

Folding, bunching or pinching of synthetic slings, which occurs when used with shackles, hooks or other applications will reduce the rated load.

CHOKER CAPACITY

A choker hitch has 80% of the capacity of a single leg sling only if the angle of choke is 120 degrees or greater. a choke angle less than 120 degrees will result in a capacity as low as 40% of the single leg.

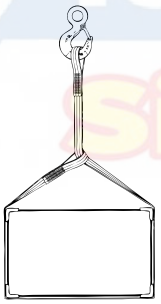

BASKET HITCH CAPACITY

HORIZONTAL ANGLE	CAPACITY % OF SINGLE LEG
90	200%
60	170%
45	140%
30	100%

A true basket hitch has twice the capacity of a single leg only if the legs are vertical.

MULTIPLE LEG SLINGS

TRIPLE LEG SLINGS have 50% more capacity than double leg slings (at same sling angle) only if the center of gravity is in the center of connection points and legs adjusted properly (they must have an equal share of the load).

QUAD (4-LEG) SLINGS offer improved stability but provide increased capacity only if all legs share an equal share of the load.

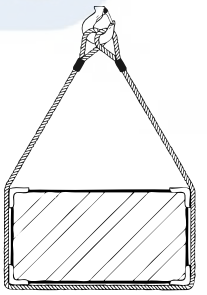

ALWAYS SELECT AND USE WEB SLINGS AND ROUND SLINGS BY THE RATED LOAD SHOWN ON THE SLING IDENTIFICATION TAG, NEVER BY WIDTH, COLOR OR SLING NUMBER.

This application/warning information apply to Crosby products only.

© 2023 The Crosby Group LLC. All Rights Reserved.

FORGED EYE BOLT

WARNINGS & APPLICATION INSTRUCTIONS

Regular Nut Eye Bolt G-291 | Shoulder Nut Eye Bolt G-277 | Machinery Eye Bolt S-279 / M-279

Important Safety Information - Read & Follow

Inspection/Maintenance Safety:

- Always inspect eye bolt before use.
- Never use eye bolt that shows signs of wear or damage.
- Never use eye bolt if eye or shank is bent or elongated.
- Always be sure threads on shank and receiving holes are clean.
- Never machine, grind, or cut eye bolt.
- Do not leave threaded end of machinery eye bolt in aluminum loads for long periods of time as it may cause corrosion.

Assembly Safety:

- Never exceed load limits specified in Table I & Table 2.
- Never use regular nut eye bolts for angular lifts.
- Always use shoulder nut eye bolts (or machinery eye bolts) for angular lifts.
- For angular lifts, adjust working load as follows:

ANGLE FROM "IN-LINE"	ADJUSTED WORKING LOAD LIMIT
5 degrees	100% of rated working load
15 degrees	80% of rated working load
30 degrees	65% of rated working load
45 degrees	30% of rated working load
90 degrees	25% of rated working load

- Never undercut eye bolt to seat shoulder against the load.
- Always countersink receiving hole or use washers with sufficient I.D. to seat shoulder.
- Always screw eye bolt down completely for proper seating.
- Always tighten nuts securely against the load.

Table 1 (In-Line Load)

Size (in)	Working Load Limit (kg)
1/4	295
5/16	544
3/8	703
1/2	1179
5/8	2359
3/4	3266
7/8	4808
1	6033
1-1/8	6804
1-1/4	9525
1-1/2	10890
1-3/4	15420
2	19050
2-1/2	29480

⚠ WARNING

- **Load may slip or fall if proper eye bolt assembly and lifting procedures are not used.**
- **A falling load can seriously injure or kill.**
- **Read and understand these instructions, and follow all eye bolt safety information presented here.**
- **Read, understand, and follow information in diagrams and charts below before using eye bolt assemblies.**

Shoulder Nut Eye Bolt – Installation for Angular Loading

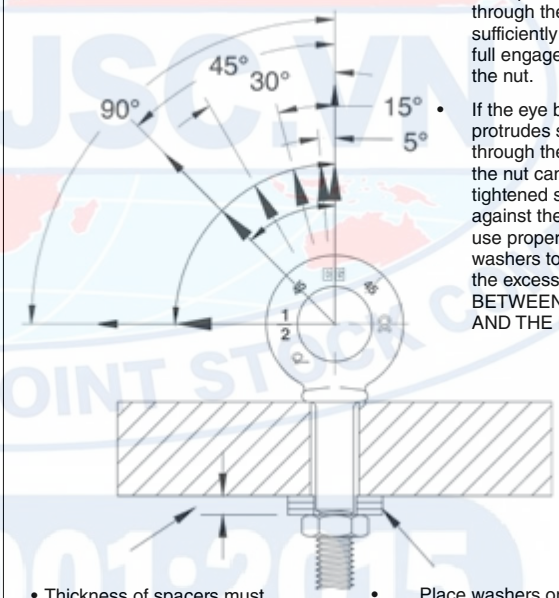

- The threaded shank must protrude through the load sufficiently to allow full engagement of the nut.
- If the eye bolt protrudes so far through the load that the nut cannot be tightened securely against the load, use properly sized washers to take up the excess space BETWEEN THE NUT AND THE LOAD.
- Thickness of spacers must exceed this distance between the bottom of the load and the last thread of the eye bolt.
- Place washers or spacers between nut and load so that when the nut is tightened securely, the shoulder is secured flush against the load surface.

Figure 1

Table 2 (In-Line Load)

Metric Size	Working Load Limit - kg
m6	200
m8	400
m10	640
m12	1000
m16	1800
m20	2500
m24	4000
m27	5000
m30	6000
m36	8500
m42	14000
m48	17300
m64	29500

© 2023 The Crosby Group LLC. All Rights Reserved.

Important – Read and understand these instructions before using eye bolts.

Regular Nut & Shoulder Nut Eye Bolt – Installation for In-Line Loading

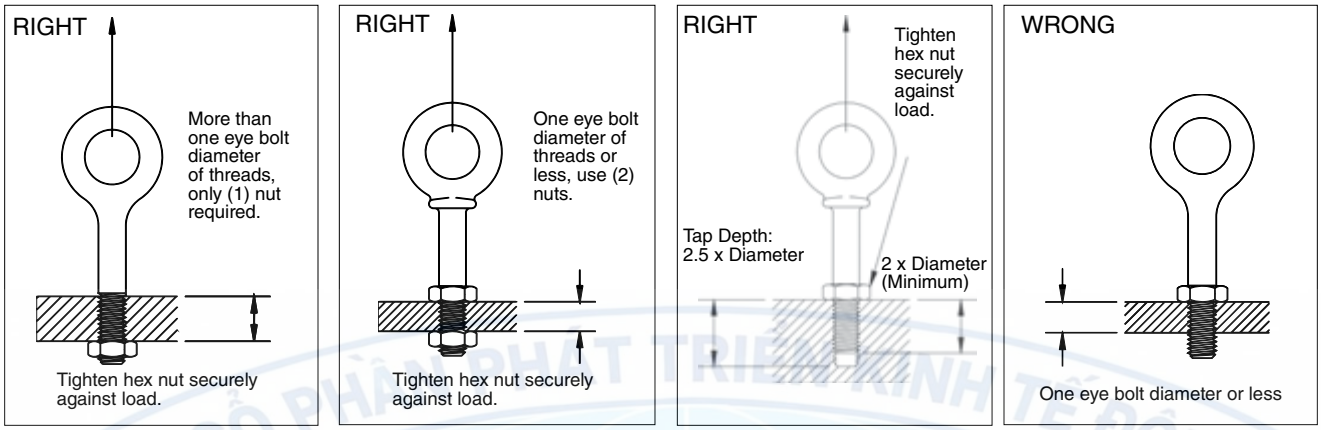

Operating Safety

- Always stand clear of load.
- Always lift load with steady, even pull – do not jerk.
- Always apply load to eye bolt in the plane of the eye – not at an angle.
- Never exceed the capacity of the eye bolt–see Table 1 & 2.
- When using lifting slings of two or more legs, make sure the loads in the legs are calculated using the angle from the vertical sling angle to the leg and properly size the shoulder nut or machinery eye bolt for the angular load.

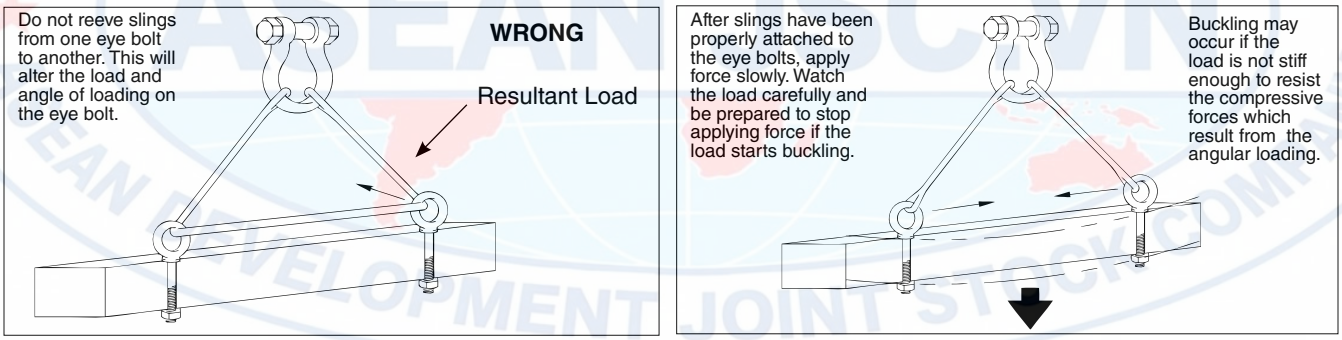

Machinery Eye Bolt - Installation for In-Line & Angular Loading

These eye bolts are primarily intended to be installed into tapped holes.

1. After the loads on the eye bolts have been calculated, select the proper size eye bolt for the job.

   For angular lifts, adjust working load as follows:

Direction of Pull (from In-Line)	Adjusted Working Load
45 degrees	30% of rated working load
90 degrees	25% of rated working load

2. Drill and tap the load to the correct sizes to a minimum depth of one-half the eye bolt size beyond the shank length of the machinery eye bolt.
3. Thread the eye bolt into the load until the shoulder is flush and securely tightened against the load.
4. If the plane of the machinery eye bolt is not aligned with the sling line, estimate the amount of unthreading rotation necessary to align the plane of the eye properly.
5. Remove the machinery eye bolt from the load and add shims (washers) of proper thickness to adjust the angle of the plane of the eye to match the sling line. Use Table 3 to estimate the required shim thickness for the amount of unthreading rotation required.

Table 3

Eye Bolt Size (mm)	Shim Thickness Required to change Rotation 90° (mm)	Eye Bolt Size (in)	Shim Thickness Required to Change Rotation 90° (in)
M6	.25	1/4	.0125
M8	.31	5/16	.0139
M10	.38	3/8	.0156
M12	.44	1/2	.0192
M16	.50	5/8	.0227
M20	.62	3/4	.0250
M24	.75	7/8	.0278
M27	.75	1	.0312
M30	.88	1-1/8	.0357
M36	1.00	1-1/4	.0357
M42	1.13	1-1/2	.0417
M48	1.25	1-3/4	.0500
M64	1.50	2	.0556
—	—	2-1/2	.0625

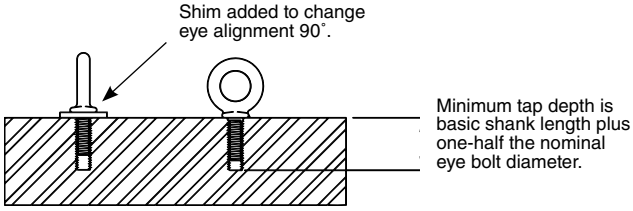

This application/warning information apply to Crosby products only.

© 2023 The Crosby Group LLC. All Rights Reserved.

CROSBY® PIVOT HOIST RING

WARNINGS & APPLICATION INSTRUCTIONS

HR-100

⚠ WARNING

- **Load may slip or fall if proper Hoist Ring assembly and lifting procedures are not used.**
- **A falling load can seriously injure or kill.**
- **Do not use with damaged slings or chain. For inspection criteria see ASME B30.9.**
- **Never apply load except in line with the pivot direction.**
- **Use only genuine Crosby bolts as replacements.**
- **Read and understand these warnings and application instructions.**

Pivot Hoist Ring Application / Assembly Instructions

- Use pivot hoist ring only with ferrous metal (steel, iron) workpiece. Do not leave threaded end of hoist ring in aluminium for long periods of time due to corrosion.
- After determining the loads on each pivot hoist ring, select the proper size using the Working Load Limit (WLL) ratings in Table 1 for UNC threads.
- Drill and tap the workpiece to the correct size to a minimum depth of one-half the threaded bolt diameter plus the effective thread projection length (see Table 1, on next page). To select proper bolt and thread sizes see Table 1 on next page.
- Install the pivot hoist ring to recommended torque with a torque wrench making sure the pivot hoist ring body meets the load (workpiece) surface. See rated load limit and bolt torque requirements imprinted on top of the pivot hoist ring body (see Table 1, on next page).
- Never use spacers between the pivot hoist ring body and workpiece surface.
- Always select proper load rated lifting device for use with pivot hoist ring.
- Attach lifting device ensuring free fit to pivot hoist ring bail (lifting ring) (Figure 1).
- Apply partial load and check proper pivot. Ensure load alignment is in the direction of pivot (Figure 4). There should be no interference between load (workpiece) and pivot hoist ring bail (Figure 2).

Pivot Hoist Ring Inspection / Maintenance

- Always inspect pivot hoist ring before use.
- Regularly inspect pivot hoist ring parts (Figure 3).
- Never use pivot hoist ring that shows signs of corrosion, wear or damage.
- Never use pivot hoist ring if bail is bent or elongated.
- Do not use parts showing cracks, nicks or gouges.
- Always be sure threads on bolts and receiving holes are clean, not damaged or worn, and fit properly.
- Always check with torque wrench before using an already installed pivot hoist ring.
- Always make sure there are no spacers (washers) used between pivot hoist ring body and the workpiece surface. Remove any spacers (washers) and retorque before use.
- Always ensure free movement of the bail. The bail should pivot 180 degrees (Figure 4).
- Always be sure total workpiece surface is in contact with the pivot hoist ring body mating surface. Drilled and tapped holes must be 90 degrees to load (workpiece) surface.
- Always make sure that the load is applied in the direction of pivot.

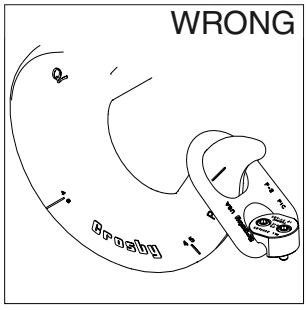

Figure 1

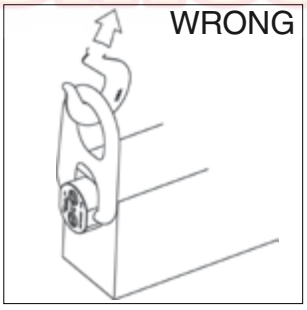

Figure 2

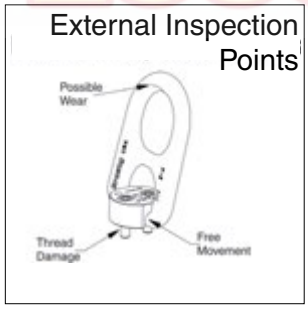

Figure 3

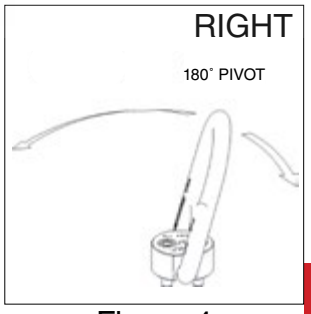

Figure 4

© 2023 The Crosby Group LLC. All Rights Reserved.

Operating Safety

- Never exceed the capacity (WLL) of the pivot hoist ring, See Table 1 for UNC threads.
- When using lifting slings of two or more legs, make sure the forces in the legs are calculated using the angle from the horizontal sling angle to the leg and select the proper size pivot hoist ring. When using a multi-leg lifting sling, the pivot hoist ring must be mounted so that the pivot direction is inline with the load applied.

Table 1
HR-100 Pivot Hoist Rings**

Working Load Limit* (Kg)	Torque in Nm.†	No. of Bolts	Dimensions (mm)	
			Bolt Size††	Effective Thread Projection Length
900	10	2	M8 - 1.25	19.08
1,150	16	2	M10 - 1.50	14.76
2,150	38	2	M12 - 1.75	34.76
5,100	38	4	M12 - 1.75	42.06
9,000	81	4	M16 - 2.0	39.36

* Ultimate load is 5 times the working load limit. Individually proof tested to 2-1/2 times the working load limit.

† Tightening torque values shown are based upon threads being clean, dry and free of lubrication.

** Designed to be used with ferrous workpiece only.

†† Only use Crosby high strength replacement bolts. Do not use any other bolts.

After slings have been properly attached to the hoist ring, apply force slowly.
Watch the load and be prepared to stop applying force if the load starts buckling.

Buckling may occur if the load is not stiff enough to resist the compressive forces which result from the angular loading.

Do not reeve slings from one bail to another. This will alter the load and angle of loading on the hoist ring.

WRONG

This application/warning information apply to Crosby products only.

© 2023 The Crosby Group LLC. All Rights Reserved.

SIDE PULL HR-1200

WARNINGS & APPLICATION INSTRUCTIONS

HR-1200

Hoist Ring Application / Assembly Instruction

- The Crosby side pull swivel hoist ring is designed to accept standard Crosby fittings to facilitate wider slings and quick attachment. In order to use the larger fittings, the load rating on the (shackle) fitting may be greater than the hoist ring frame. **Never exceed the Working Load Limit of the hoist ring frame.**
- Use swivel hoist ring only with a ferrous metal (steel, iron) or non-ferrous (i.e., aluminum) loads (workpiece). Do not leave threaded end of hoist ring in aluminum loads for long time periods due to corrosion.
- After determining the loads on each hoist ring, select the proper size hoist ring using the Working Load Limit ratings in Table 1 for UNC threads and Table 2 for Metric threads (On next page.)
- For Subsea or Metric environment application, use the HR-1200 CT Series hoist ring only.
- Drill and tap the workpiece to the correct size to a minimum depth of one-half the threaded shank diameter plus the threaded shank length.
- Install hoist ring to recommended torque with a torque wrench making sure the bushing flange is fully supported by the load (workpiece) surface. See rated load limit and bolt torque requirements imprinted on hoist ring body (See Table 1 or Table 2).
- Never use spacers between bushing flange and mounting surface.
- Always select proper lifting device for use with Swivel Hoist Ring (See Tables 1 & 2 On next page).
- Attach lifting device ensuring free fit to hoist shackle (See Figure 3).
- Apply partial load and check proper rotation and alignment of shackle. There should be no interference between load (workpiece) and hoist shackle (See Figure 1 and Figure 3).
- The Hoist ring should rotate into normal operating position, with shackle aligned with load as shown in Figure 3. If shackle is oriented as shown in Figure 4, **DO NOT LIFT**.
- **Special Note:** when a Hoist Ring is installed with a retention nut, the nut must have full thread engagement and must meet one of the following standards to develop the Working Load Limit (WLL).
  1. ASTM A-563 (A) Grade D Hex Thick
  2. (B) Grade DH Standard Hex
  3. SAE Grade 8 - Standard Hex

Hoist Ring Inspection / Maintenance

- Always inspect hoist ring before use.
- Regularly inspect hoist ring parts (Figure 2).
- For hoist rings used in frequent load cycles or on pulsating loads, the bolt threads should be periodically inspected by magnetic particle or dye penetrant.
- Do not use part showing cracks, nicks or gouges.
- Repair minor nicks or gouges to hoist frame by lightly grinding until surfaces are smooth. Do not reduce original dimension more than 10%. Do not repair by welding.

⚠ WARNING

- **Loads may slip or fall if proper Hoist Ring assembly and lifting procedures are not followed.**
- **A falling load may cause serious injury or death.**
- **Install hoist ring bolt to torque requirements listed in tables.**
- **The side pull hoist ring frame will be only one part of a lifting system with several components (i.e., shackles and slings). Never exceed the Working Load Limit of the hoist ring frame.**
- **Do not use damaged slings or chain. For inspection criteria, see ASME B30.9.**
- **Read and understand these instructions before using hoist ring.**
- **The tension of the sling must be calculated or measured and can not exceed the working load limit (WLL) of the load connection fitting.**
- **Use only genuine Crosby parts as replacements.**
- **Replacement bolt kits are available from Crosby.**

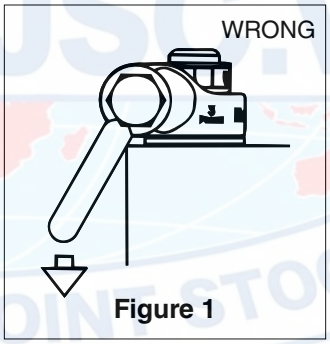

Figure 1

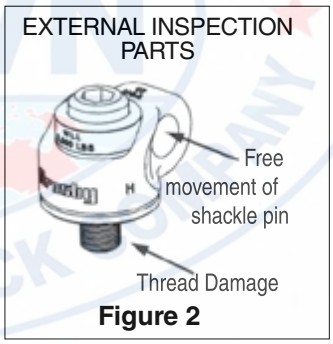

Figure 2

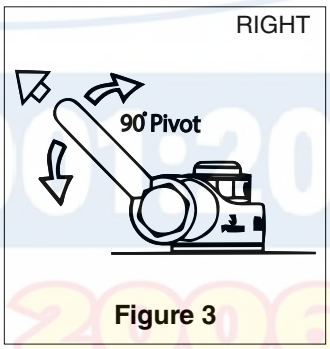

Figure 3

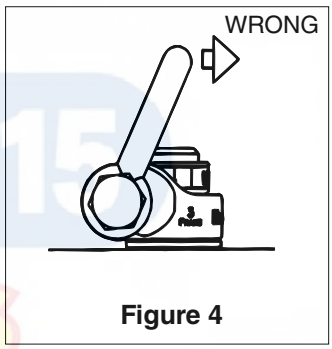

Figure 4

- Never use hoist ring that shows signs of corrosion, wear or damage.
- Never use hoist ring if components are bent or elongated.
- Always be sure threads on bolt and receiving tapped holes are clean, undamaged, and fit properly.
- Always check with torque wrench before using an already installed hoist ring.
- Always make sure there are no spacers (washers) used between bushing flange and the mounting surface. Remove any spacers (washers) and retorque before use.
- Always ensure free movement of shackle. The shackle should pivot 90° and the hoist ring should swivel 360° (See Figure 3).
- Always be sure total workpiece surface is in contact with hoist ring bushing mating surface. Drilled and tapped hole must be 90° to load (workpiece) surface.

© 2023 The Crosby Group LLC. All Rights Reserved.

OPERATING SAFETY

- Never exceed the capacity of the hoist ring, see Table 1 for UNC threads and Table 2 for Metric threads.
- When using lifting slings of two or more legs, make sure the forces in the legs are calculated using the angle from the horizontal sling angle to the leg and select the proper size swivel hoist ring to allow for the angular forces.

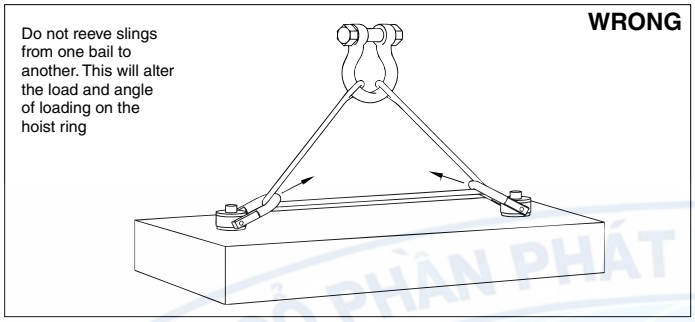

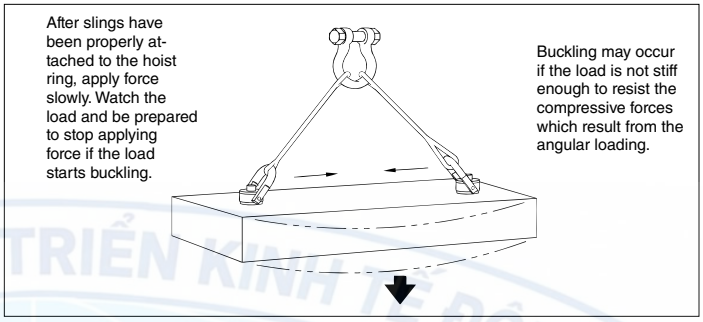

HR-1200 UNC Threads — TABLE 1

Frame Size	Working Load Limit * (lb)	Hoist Ring Bolt Torque in Ft • lb †	Bolt Size ‡ (in)	Effective Thread Projection Length (in)	Recommended Shackles: Red Pin ® Shackles 209, 210, 213 215, 2130, 2150	Recommended Shackles: Red Pin ® Web Shackles S-281
1	650†† 800††	7 12	5/16 - 18 x 1.5 3/8 - 18 x 1.5	.59 .59	1/2" - (2) 5/8" - (3-1/4)	2" - (3-1/4)
2	2000 2000†† 3000 3000††	28 28 60 60	1/2 - 13 x 2.0 1/2 - 13 x 2.5 5/8 - 11 x 2.0 5/8 - 11 x 2.75	.71 1.21 .71 1.46	5/8" - (3-1/4) 3/4" - (4-3/4)	2" - (3-1/4) 1-1/2" - (4-1/2)
3	5000 5000†† 6500 6500†† 8000 8000††	100 100 160 160 230 230	3/4 - 10 x 2.75 3/4 - 10 x 3.5 7/8 - 9 x 2.5 7/8 - 9 x 3.5 1 - 8 x 3.0 1 - 8 x 4.0	1.46 1.63 .90 1.68 1.15 2.15	7/8" - (6-1/2)	2" - (6-1/4)
4	14000	470	1-1/4 - 7 x 4.5	2.22	1" - (8-1/2) 1-1/8" - (9-1/2) 1-1/4" - (12)	3" - (8-1/2)
5	17200 29000	800 1100	1-1/2 - 6 x 6.5 2 - 4-1/2 x 6.5	2.88 2.98	1-3/8" - (13-1/2) 1-1/2" - (17) 1-3/4" - (25)	—

HR-1200M Metric Threads — TABLE 2

Frame Size	Working Load Limit * (kg)	Hoist Ring Bolt Torque in Nm †	Bolt Size ‡ (mm)	Effective Thread Projection Length (mm)	Recommended Shackles: Red Pin ® Shackles 209, 210, 213 215, 2130, 2150	Recommended Shackles: Red Pin ® Web Shackles S-281
1	300 400	10 16	M8 x 1.25 x 40 M10 x 1.5 x 40	16.9 16.9	1/2" - (2) 5/8" - (3-1/4)	2" - (3-1/4)
2	1000 1400	38 81	M12 x 1.75 x 50 M16 x 2.00 x 60	17.2 27.2	5/8" - (3-1/4) 3/4" - (4-3/4)	2" - (3-1/4) 1-1/2" - (4-1/2)
3	2250 3500	136 312	M20 x 2.50 x 75 M24 x3.00 x 80	28.1 33.1	7/8" - (6-1/2)	2" - (6-1/4)
4	6250	637	M30 x 3.5 x 120	65.1	1" - (8-1/2) 1-1/8" - (9-1/2) 1-1/4" - (12)	3" - (8-1/2)
5	7750 10000 13000	1005 1005 1350	M36 x 4.0 x 150 M42 x 4.5 x 160 M48 x 5.0 x 160	60.6 70.6 70.6	1-3/8" - (13-1/2) 1-1/2" - (17) 1-3/4" - (25)	—

Designed to be used with Ferrous workpiece only.

* Ultimate load is 5 times the Working Load Limit. Individually proof tested to 2-1/2 times the Working Load Limit.
† Tightening torque values shown are based upon threads being clean, dry and free of lubrication.
†† Long bolts are designed to be used with soft metal (i.e., aluminum) workpiece. While the long bolts may also be used with ferrous metal (i.e., steel & iron) workpieces, short bolts are designed for ferrous workpieces only.
‡ Bolt specification is a Grade 8 Alloy socket head cap screw to ASTM A574. All threads are UNC - 3A.
‡‡ Bolt specification is a Grade 12.9 Alloy socket head cap to DIN 912. All threads are metric (ASME/ANSI B18.3.1m).

This application/warning information apply to Crosby products only.
© 2023 The Crosby Group LLC. All Rights Reserved.

CROSBY® WELD-ON PIVOTING LINK

WARNING & APPLICATION INSTRUCTIONS

S-265

⚠ WARNING

- **Loads may disengage from link if proper welding, assembly, and lifting procedures are not used.**
- **A falling load may cause serious injury or death.**
- **Do not use with damaged slings or chain. For sling inspection criteria see ASME B30.9.**
- **Read and understand these instructions before welding on, or using the pivoting link.**

Important Safety Information - Read and Follow

- Use weld-on pivoting link only with ferrous metal (steel) workpiece.
- After determining the loads on each weld-on pivoting link, select the proper size using the Working Load Limit (WLL) ratings in Table 1 on next page.
- Always make sure the weld-on pivoting link and mounting surface is free of dirt or contaminants before installation.
- Never use spacers between the weld-on pivot link and mounting surface.
- Always select proper load rated lifting device for use with weld-on pivoting link.
- Attach lifting device ensuring free movement of weld-on pivoting link bail (Figure 1).
- Apply partial load and check proper alignment. There should be no interference between load (workpiece) and weld-on pivoting link (Figure 2).
- Always ensure free movement of bail. The bail should pivot 180 degrees (Figure 4).
- The support structure that the pivot link is attached to must be of suitable size, composition and quality to support the anticipated loads of all operating positions. The required support structure thickness for a given application is dependent on variables such as unsupported length and material strength, and should be determined by a qualified individual.
- Never repair, alter, rework or reshape the pivoting link bail by welding, heating, burning or bending.

Weld-on Pivoting Link Inspection / Maintenance

- Always inspect weld-on pivoting link before use.
- Regularly inspect weld-on pivoting link parts (Figure 3).
- Never use weld-on pivoting link that shows signs of corrosion, wear or damage.
- Never use weld-on pivoting link if bail is bent or elongated.
- Do not use part showing cracks, nicks or gouges.
- Always make sure there are no spacers used between weld-on pivoting link and the mounting surface.
- Always be sure workpiece surface is in total contact with the weld-on pivoting link base mating surface.
- Always inspect the weld-on pivoting link bail and base for wear.
- A visual periodic inspection of the weld should be performed. Check the weld visually, or use a suitable NDE method if required.

Operating Safety

- Never exceed the capacity (WLL) of the weld-on pivoting link (Table 1, next page).
- Always apply load within 90° of inline, at any pivot angle (Figure 4 & 5).
- When using lifting slings of two or more legs, make sure the forces in the legs are calculated using the angle from the horizontal sling angle to the leg and select the proper size link.

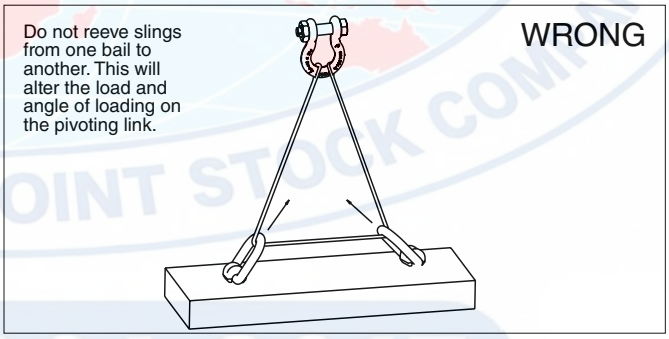

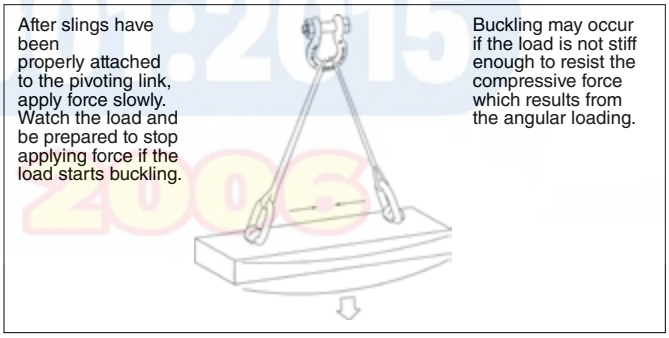

Figure 1

Figure 2

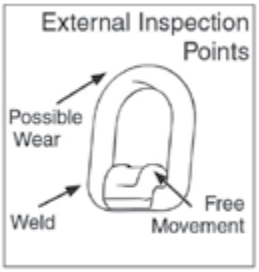

Figure 3

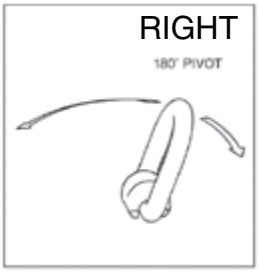

Figure 4

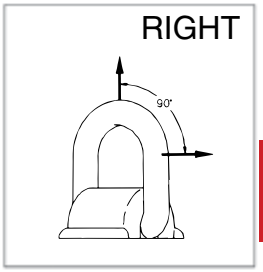

Figure 5

© 2023 The Crosby Group LLC. All Rights Reserved.

Weld-on Pivoting Link Welding Guidelines

1. Select the correct size weld-on pivoting link to be used. Be sure to calculate the maximum load that will be applied to the weld-on pivoting link.
2. Place the weld-on pivoting link onto the mounting surface. The bottom of the link base must be parallel and even with the mounting surface.
3. Welding is to be performed by a qualified welder using a qualified procedure in accordance with American Welding Society and/or American Society of Mechanical Engineers requirements. Always follow your country or local mandatory regulations or codes.
4. The following welding recommendations should be included in the qualified procedure for welding to low or medium carbon plate steel. For welding to other grades of steel, a qualified weld procedure must be developed.
   A. Saddle material is equivalent to SAE/AISI 1024, EN S355J2, or DIN 1.0570.
   B. Weld material is to have a minimum tensile strength of 70,000 PSI (such as AWS A5.1 E-7018). Observe the electrode manufacturer's recommendations. Completely fill internal fillet created between weld-on pivoting link base and mounting surface.
   C. Before welding, all weld surfaces must be clean and free from rust, grease, paint, slag and any other contaminants.
   D. Fillet weld leg size should be minimum shown in Table 1. Weld profiles to be in accordance with AWS. Weld size is measured by length of leg.
   E. Welding should be carried out in a minimum of two passes to ensure adequate root penetration at the base of the pivoting link.
   F. Weld full length of "D" dimension on both sides of link base (Figure 5).
   G. Do not weld close to the bail. After welding, ensure bail pivots full 180° without interfering with the weld.
   H. Do not rapidly cool the weld.
   I. The ends of the weld must be ground sufficiently so that the weld-on pivoting link will fit flush against the mounting surface.
   J. A thorough inspection of the weld should be performed. No cracks, pitting, inclusions, notches or undercuts are allowed. If doubt exists, use a suitable NDE method, such as magnetic particle or liquid penetrant to verify.
   K. If repair is required, grind out the defect and re-weld using the original qualified procedure.

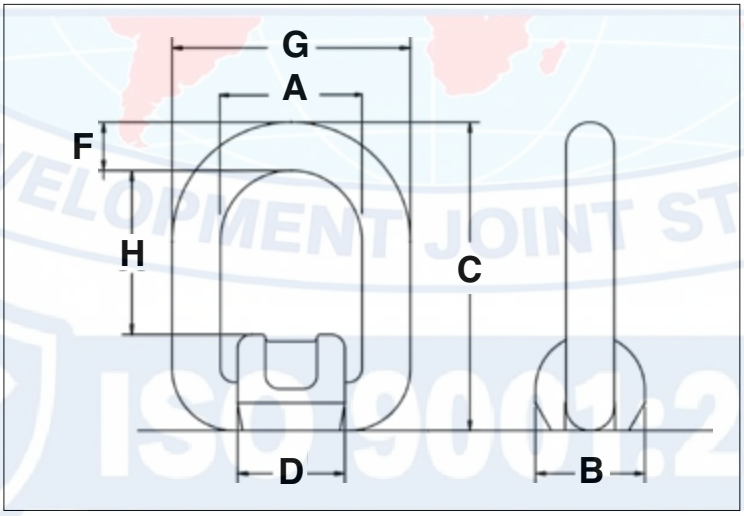

Figure 5

Table 1
S-265 Weld-on Pivoting Links*

Stock Number	Working Load Limit (t)		Dimensions (mm)								Weight Each (kg)
	Design Factor 5:1	Design Factor 4:1	A	B	C	D	F	G	H	Minimum Fillet Weld Size	
1290839	1	1.2	40	36	83	35	13	66	42	3	.40
1290848	2.5	3.2	45	44	99	42	18	81	48	3	.60
1290857	4	5.3	55	50	123	49	22	99	57	6	1.20
1290866	6.4	8	70	64	144	64	26	122	67	6	2.40
1290875	12	15	97	90	193	86	34	165	94	8	5.90

*Designed to be used with ferrous workpiece only.

This application/warning information apply to Crosby products only.

© 2023 The Crosby Group LLC. All Rights Reserved.

CROSBY SWIVEL HOIST RING

WARNING & APPLICATION INSTRUCTIONS

HR-125/SS-125
(Red Washer)
HR-125M
SS-125M
(Silver Washer)

HR-1000
(Red Washer)
HR-1000M
(Sliver Washer)
HR-1000CT
(Blue Washer)

Hoist Ring Application Assembly Safety

- Use swivel hoist ring only with a ferrous metal (steel, iron) or soft metal (i.e., aluminum) load (workpiece). Do not leave threaded end of hoist ring in aluminum loads for long time periods due to corrosion.
- For subsea or marine environment applications, use the HR-1000CT series Hoist Ring only.
- After determining the loads on each hoist ring, select the proper size hoist ring using the Working Load Limit ratings in Tables 1, 3, and 5 for UNC threads and Tables 2, 4 and 6 for Metric threads (on next page).
- Drill and tap the workpiece to the correct size to a minimum depth of one-half the threaded shank diameter plus the threaded shank length. See rated load limit and bolt torque requirements imprinted on top of the swivel trunnion (See Table 1 through Table 6 on next page).
- When a hoist ring is used in a side load application, ensure equal loading on the pins by aligning the bail as shown in (Fig. 3).
- Always be sure total hoist ring bushing mating surface is in contact with the (workpiece) surface. Drilled and tapped hole must be 90 degrees to load (workpiece) surface.
- Install hoist ring to recommended torque with a torque wrench making sure the bushing flange meets the load (workpiece) surface.
- Never use spacers between bushing flange and mounting surface.
- Always select proper load rated lifting device for use with Swivel Hoist Ring.
- Attach lifting device ensuring free fit to hoist ring bail (lifting ring) (Fig. 1).
- Apply partial load and check proper rotation and alignment. There should be no interference between load (workpiece) and hoist ring bail (Fig. 2).
- Special Note: When a Hoist Ring is installed with a retention nut, the nut must have a full thread engagement and must meet one of the following standards to develop the Working Load Limit (WLL).

UNC NUTS

1. **ASTM A-563**
   Grade D
   (Heavy Hex or Hex Thick)
   Grade DH
   Grade DH3
2. **ASTM A-194**
   Grade 2H
   Grade 4
   Grade 7
3. **FNL**
   Grade 9
4. **SAE J995**
   Grade 8

METRIC NUTS

1. **ASTM A-563M**
   Class 10S
2. **ISO 898-2**
   (EN 20898-2/DIN 267-4)
   Class 10
   Class 12

Minimum thread engagement length is one times thread diameter.

Hoist Ring Inspection / Maintenance

- Always inspect hoist ring before use.
- Regularly inspect hoist ring parts.
- Never use hoist ring that shows signs of corrosion, wear or damage.
- Never use hoist ring if bail is bent or elongated.
- Always be sure threads on shank and receiving hole are clean, not damaged, and fit properly.
- Always check with torque wrench before using an already installed hoist ring.
- Always make sure there are no spacers (washers) used between bushing flange and the mounting surface. Remove any spacers (washers) and retorque before use.
- Prior to loading always ensure free movement of bail. The bail should pivot 180 degrees and swivel 360 degrees.

⚠ WARNING

- **Loads may slip or fall if proper Hoist Ring assembly and lifting procedures are not used.**
- **A falling load may cause serious injury or death.**
- **Install hoist ring bolt to torque requirements listed in tables 1, 2, 3, 4, 5, & 6 for the HR-125, HR-1000, HR-1000CT, HR-125M, HR-1000M and SS-125.**
- **Read, understand and follow all instructions and chart information.**
- **Do not use with damaged slings, chain, or webbing. For inspection criteria see ASME B30.9.**
- **The tension of the sling must be calculated or measured and can not exceed the working load limit (WLL) of the load connection fitting.**
- **Use only genuine Crosby parts as replacements.**

Operating Safety

- Never exceed the capacity of the swivel hoist ring, see Tables 1, 2 and 5 for UNC threads and Tables 3, 4 and 6 for Metric threads (See next page for tables.).
- When using lifting slings of two or more legs, make sure the forces in the legs are calculated using the angle from the horizontal sling angle to the leg and select the proper size swivel hoist ring to allow for the angular forces.

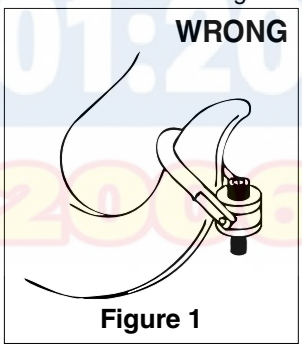

Figure 1

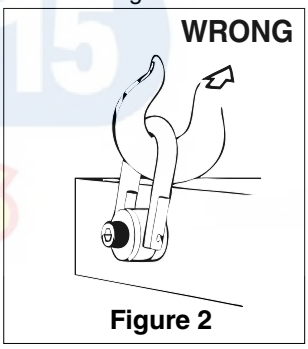

Figure 2

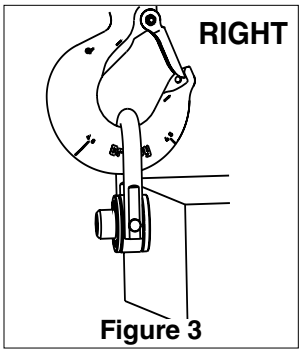

Figure 3

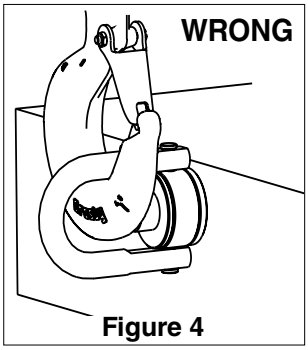

Figure 4

© 2023 The Crosby Group LLC. All Rights Reserved.

Table 1					
		HR-125		HR-1000	
WLL* 5:1 (lb)	Hoist Ring Bolt Torque Ft•lbs †	Bolt Size ‡ (in)	Effective Thread Projection Length (in)	Bolt Size ‡ (in)	Effective Thread Projection Length (in)
800 ††	7	5/16 - 18 x 1.50	.58	5/16 - 18 x 1.50	.52
1000 ††	12	3/8 - 16 x 1.50	.58	3/8 - 16 x 1.50	.52
2500	28	1/2 - 13 x 2.00	.70	1/2 - 13 x 2.25	.69
2500 ††	28	1/2 - 13 x 2.50	1.20	1/2 - 13 x 2.75	1.19
4000	60	5/8 - 11 x 2.00	.70	5/8 - 11 x 2.25	.69
4000 ††	60	5/8 - 11 x 2.75	1.45	5/8 - 11 x 3.00	1.44
5000	100	3/4 - 10 x 2.25	.95	3/4 - 10 x 2.50	.94
5000 ††	100	3/4 - 10 x 2.75	1.45	3/4 - 10 x 3.00	1.44
7000 Ω	100	3/4 - 10 x 2.75	.89	3/4 - 10 x 3.00	.85
7000 ††Ω	100	3/4 - 10 x 3.50	1.64	3/4 - 10 x 3.50	1.35
8000	160	7/8 - 9 x 2.75	.89	7/8 - 9 x 3.00	.85
8000 ††	160	7/8 - 9 x 3.50	1.64	7/8 - 9 x 3.50	1.35
10000	230	1 - 8 x 3.00	1.14	1 - 8 x 3.50	1.35
10000 ††	230	1 - 8 x 4.00	2.14	1 - 8 x 4.50	2.35
15000	470	1-1/4 - 7 x 4.50	2.21	1-1/4 - 7 x 5.00	2.09
24000	800	1-1/2 - 6 x 6.75	2.97	1-1/2 - 6 x 5.50	2.59
30000	1100	2 - 4-1/2 x 6.75	2.97	—	—
50000	2100	2-1/2 - 4 x 8.00	4.00	—	—
75000	4300	3 - 4 x 10.50	5.00	—	—
100000	5100	3-1/2 - 4 x 13.00	7.00	—	—

Ω Ultimate Load is 4.5 times Working Load Limit for 7000# Hoist Ring when tested in 90° orientation. All sizes are individually proof tested to 2-1/2 times the Working Load Limit. *, †, ††, ‡ (See footnotes at bottom of Table 5).

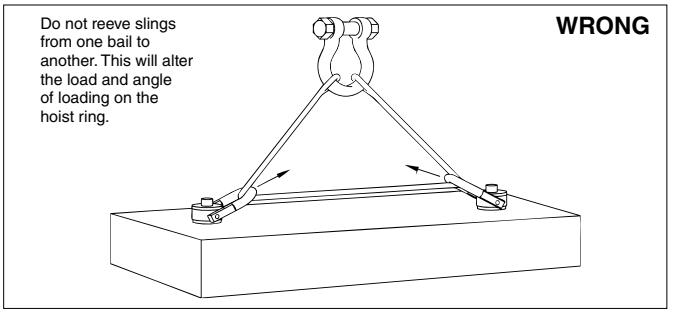

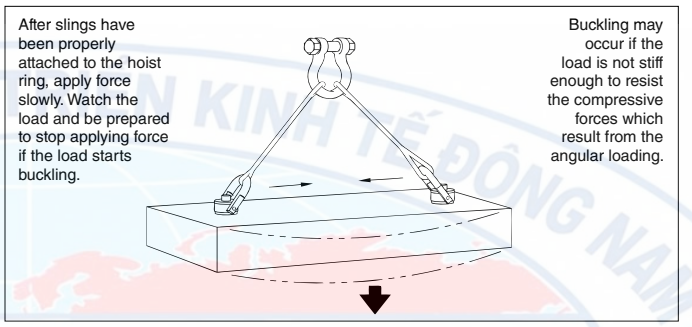

Table 2				
Working Load Limit (kg) ****		HR-1000MCT		
Design Factor 5:1	Design Factor 4:1	Hoist Ring Bolt Torque in (Nm) †	Bolt Size (mm) ‡‡	Effective Thread Projection Length (mm)
825	1030	38	M12 x 1.75 x 55	15.6
1350	1690	81	M16 x 2.00 x 65	25.5
2250	2810	136	M20 x 2.50 x 80	25.3
3175	3970	312	M24 x 3.00 x 90	35.4
5450	6810	637	M30 x 3.50 x 140	65.9
7450	9310	1005	M36 x 4.00 x 130	56.3
13250	16560	1350	M48 x 5.00 x 180	50.7

Table 3			
HR-1000CT			
Working Load Limit 5:1 (lb) ****	Hoist Ring Bolt Torque in (Ft • lbs) †	Bolt Size (in) Δ	Effective Thread Projection Length (in)
1900	28	1/2 - 13 x 2.25	.70
1900	28	1/2 - 13 x 2.75	1.20
3000	60	5/8 - 11 x 2.25	.70
4800	100	3/4 - 10 x 3.00	.85
6200	160	7/8 - 9 x 3.00	.85
8300	230	1 - 8 x 3.50	1.35
12500	470	1 1/4 - 7 x 5.00	2.10
20000	800	1 1/2 - 6 x 5.50	2.60
20000	800	1 1/2 - 8 x 5.50	2.60
28000	1100	2 - 4.5 x 7.50	3.20
45000	2100	2 1/2 - 4 x 9.50	3.73

Table 4						
Working Load Limit (kg)***			HR-125M		HR-1000M	
Design Factor 5:1	HR-125M Design 4:1	Hoist Ring Bolt Torque in Nm †	Bolt Size ‡‡ (mm)	HR-125M Effective Thread Projection Length (mm)	Bolt Size ‡‡ (mm)	HR-1000M Effective Thread Projection Length (mm)
400	500	10	M 8 X 1.25 X 40	16.9	M 8 X 1.25 X 40	15.2
450	550	16	M 10 X 1.50 X 40	16.9	M 10 X 1.50 X 40	15.2
1050	1300	38	M 12 X 1.75 X 50	17.2	M 12 X 1.75 X 55	15.5
1900	2400	81	M 16 X 2.00 X 60	27.2	M 16 X 2.00 X 65	25.5
2150	2700	136	M 20 X 2.50 X 65	31.2	M 20 X 2.50 X 70	30.5
3000	3750	136	M 20 X 2.50 X 75	28.1	M 20 X 2.50 X 80	25.4
4200	5250	312	M 24 X 3.00 X 80	33.1	M 24 X 3.00 X 90	35.4
7000	8750	637	M 30 X 3.50 X 120	65.1	M 30 X 3.50 X 140	66.2
11000	13750	1005	M 36 X 4.00 X 150	60.6	M 36 X 4.00 X 150	56.2
12500	15600	1005	M 42 x 4.50 x 160	70.6	—	—
13500	16900	1350	M 48 x 5.00 x 160	101	—	—
22300	27900	2847	M 64 x 6.00 x 204	101	—	—
31500	39400	5830	M 72 x 6.00 x 265	132	—	—
44600	55800	6914	M 90 x 6.00 x 330	177	—	—

See Footnotes on next page.

This application/warning information apply to Crosby products only.

© 2023 The Crosby Group LLC. All Rights Reserved.

† Tightening torque values shown are based upon threads being clean, dry and free of lubrication.

Footnotes below relate to tables 1-4

* Ultimate load is 5 times the Working Load Limit. Individually proof tested to 2-1/2 times the Working Load Limit.

** Ultimate load is 4 times the Working Load Limit. Individually proof tested to 2-1/2 times the Working Load Limit.

*** Individually proof tested to 2-1/2 times the Working Load Limit based on 4:1 design factor

**** Ultimate load is 5 times the Working Load Limit. Individually proof tested to 2 times the Working Load Limit.

†† Long bolts are designed to be used with soft metal (i.e., aluminum) workpiece. While the long bolts may also be used with ferrous metal (i.e., steel & iron) workpieces, short bolts are designed for ferrous workpieces only.

‡ Bolt specification is an Alloy socket head cap screw to ASTM A574. All threads are UNC .

‡‡ Bolt specification is a Grade 12.9 Alloy socket head cap screw to DIN 912. All threads are metric (ASME/ANSI B18.3.1m)

∆ Bolt specification is a Grade L7 or L43 Alloy socket head cap screw to ASTM A320. All threads are UNC.

‡‡‡ Tighten bolt to specified torque, then tighten nut to specified torque.

All Swivel Hoist Rings are individually proof tested.

Table 5

SS-125 ¥¥

Working Load Limit (lb) ¥	Torque in Ft • lbs †	Bolt Size (in) §	Effective Thread Projection (in)
400	3.5	5/16 - 18 x 1	.29
400	3.5	5/16 - 18 x 1.25	.54
500	6	3/8 - 16 x 1.25	.54
1250	14	1/2 - 13 x 2	.78
1250	14	1/2 - 13 x 2.25	1.03
1250	14	1/2 - 13 x 2.5	1.28
2000	30	5/8 - 11 x 2	.78
2000	30	5/8 - 11 x 2.25	1.03
2000	30	5/8 - 11 x 2.5	1.28
2500	50	3/4 - 10 x 2.25	1.03
2500	50	3/4 - 10 x 2.75	1.53
3500	50	3/4 - 10 x 2.75	1.04
3500	50	3/4 - 10 x 3.25	1.54
4000	80	7/8 - 9 x 2.75	1.04
4000	80	7/8 - 9 x 3	1.29
5000	115	1 - 8 x 3	1.29
5000	115	1 - 8 x 3.25	1.54
5000	115	1 - 8 x 4	2.29
7500	235	1-1/4 - 7 x 4	1.89
12000	400	1-1/2 - 6 x 5.5	2.70
15000	550	2 - 4-1/2 x 5.75	2.96
25000	1050	2-1/2 - 4 x 8	4.00
25000	1050	2-1/2 - 8 x 8	4.00
37500	2150	3 - 4 x 10.25	5.00
50000	2550	3-1/2 - 4 x 13	7.00

Table 6

SS-125M ¥¥

Working Load Limit (kg) ¥	Torque in (Nm) †	Bolt Size (mm) §§	Effective Thread Projection (mm)
200	4	M 8 x 1.25x30	13
250	8	M 10 x 1.50x35	18
525	18	M 12 x 1.75x50	19
950	40	M 16 x 2.00x60	29
1075	68	M 20 x 2.50x65	34
1500	68	M 20 x 2.50x75	32
2100	108	M 24 x 3.00x80	37
2100	108	M 30 x 3.50x110	58
3500	318	M 30 x 3.50x95	42
3500	318	M 30 x 3.50x115	62
5500	542	M 36 x 4.00x135	64
6250	542	M 42 x 4.50x155	82
6750	746	M 48 x 5.00x155	82
11150	1423	M 64 x 6.00x205	101
15750	2915	M 72 x 6.00x265	132
22300	3459	M 90 x 6.00x330	177

Footnotes below relate to Tables 6 and 7

¥ Ultimate load is 5 times the Working Load Limit. Individually proof tested to 2 times the Working Load Limit.

¥¥ All components are 316 Stainless Steel, except Bolt Retainers, which are made from15-7 PH (UNS 15700) magnetic stainless steel.

§ Bolt specification is 316 Stainless Steel socket head cap screw to ASTM F 837 Group 1 (316).

§§ Bolt specification is 316 Stainless Steel socket head cap screw to ASTM F837M (316).

All threads are Metric (ASME/ANSI B18.3.1M).

© 2023 The Crosby Group LLC. All Rights Reserved.

CROSBY Slide-Loc® Lifting Point

WARNINGS & APPLICATION INSTRUCTIONS

SL-150 & SL-150M
Slide-Loc Lifting Point

WARNING

- **Load may slip or fall if proper Lifting Point assembly and lifting procedures are not used.**
- **A falling load can seriously injure or kill.**
- **Do not use with damaged slings or chain. For inspection criteria see ASME B30.9.**
- **Use only genuine Crosby bolts as replacements.**
- **Read and understand these warnings and application instructions.**
- **Do not load the Lifting Point if the slide lock is in the installation position (Red QUIC-CHECK mark is visible).**
- **The tension of the sling must be calculated or measured and can not exceed the working load limit (WLL) of the load connection fitting.**

LIFTING POINT APPLICATION / ASSEMBLY INSTRUCTIONS

- Lifting Points incorporate a red indented area on each forged bail that provides a quick indicator to determine whether the Lifting Point is in the installation position or the lifting position. If the **QUIC-CHECK** mark is visible, product is in installation mode and shall not be used for lifting.
- **To check,** look for indented surface (red) on bail. A visible **QUIC-CHECK** mark (Figure 2) means the slide lock and bolt are engaged for installation. When Lifitng Point is properly installed, move slide lock to lifting position (Figure 1).
- Use Lifting Points only with a ferrous metal (i.e., steel, iron) or soft metal (e.g., aluminum) load (workpiece). Do not leave threaded end of Lifting Point in aluminum loads for long time periods due to corrosion.
- When using lifting slings of two or more legs, make sure the forces in the legs are calculated using the angle from the horizontal sling angle to the leg and select the proper size swivel hoist ring to allow for the angular forces.
- After determining the loads on each Lifting Point, select the proper size Lifting Point using the Working Load Limit ratings in Table 1 for UNC threads and Table 2 for Metric threads.
- Never exceed rated capacity of Lifting Point. See Table 1 for UNC threads, and Table 2 for metric threads.
- Drill and tap the workpiece to the correct size to a minimum depth of one-half the threaded shank diameter plus the threaded shank length.
- Install Lifting Point by hand so that the bushing flange is held tight to the mounting surface by the bolt. The bushing flange should engage the entire mounting surface.
- Never use spacers between bushing flange and mounting surface.
- Always select proper load rated lifting device for use with Lifting Points.
- Attach lifting device ensuring free fit to Lifting Point bail (Figure 6).
- Never lift load if Red **QUIC-CHECK** indicator is visible (Figure 2).
- Apply partial load and check proper rotation and alignment. The Lifting Point bail should be in-line with the direction of the load.

USING THE LIFTING POINT

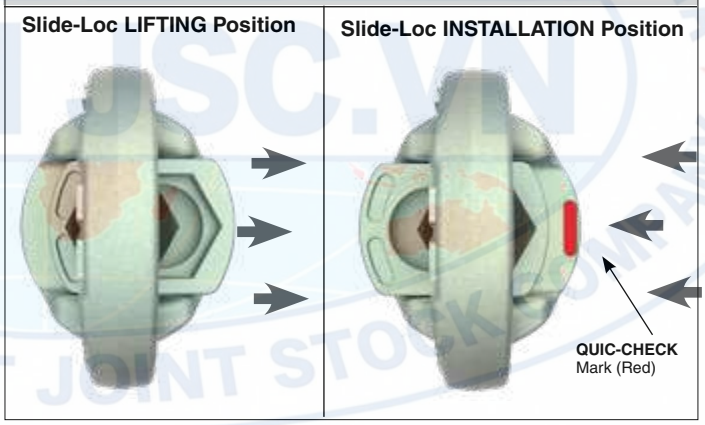

Figure 1 **Figure 2**

- Do not load in a direction perpendicular to the bail (Figure 5).
- Special Note: Recommended thru hole clearance is 1/32" for bolts smaller than 1" and 2/32" for bolts 1" and larger in diameter.

1. ASTM A-563
   - A. Grade D Hex Thick
   - B. Grade DH Standard Hex
2. SAE Grade 10.9 — Standard Hex

To place the Lifting Point:

- Move the slide lock into the installation position, such that the four flats on the bolt head are engaged (Figure 2).
- Thread the bolt of the Lifting Point into the hole of your workpiece making sure that the entire length of exposed bolt thread is engaged. If the hole on your workpiece is not threaded, ensure that the Lifting Point is secured with a nut on the opposite side of your workpiece and that that nut thread is fully engaged.

This application/warning information apply to Crosby products only.

© 2023 The Crosby Group LLC. All Rights Reserved.

- Before applying any load, ensure that the slide lock has been moved back into the lifting position and that the bail is free to rotate (Figure 1).
- The Lifting Point can be loaded in any direction shown in Figure 4.
- Do not swivel the Lifting Point while supporting a load. The Lifting Point is a positioning device and is not intended to swivel under load.

To remove Lifting Point

- Move the slide lock into the installation position, such that the four flats on the bolt head flats are engaged (Figure 2).
- Unthread the Lifting Point from your workpiece.

Lifting Point Inspection / Maintenance

- Perform regular daily inspections as recommended.
- Always inspect Lifting Point before use.
- Regularly inspect Lifting Point parts (Figure 3).
- Never use Lifting Point that shows signs of corrosion, wear or damage.
- Never use Lifting Point if bail is bent or elongated.
- Always be sure threads on shank and receiving hole are clean, not damaged, and fit properly.
- Never use spacers (washers) between bushing flange and the mounting surface.
- Always ensure free movement of bail. The bail should swivel 360 degrees (Figure 3).
- Always be sure total workpiece surface is in contact with Lifting Point bushing mating surface. Drilled and tapped hole must be 90 degrees to load (workpiece) surface.

Table 1

Working Load Limit 4:1 (t)	UNC Bolt Size (in)	Effective Thread Projection Length (in)
.5	3/8	.61
.75	1/2	.80
1.50	5/8	1.01
2.30	3/4	1.28
2.30	7/8	1.63
3.20	1	1.93

Table 2

Working Load Limit 4:1 (t)	Metric Bolt Size (mm)	Effective Thread Projection Length (mm)
.5	10	14.7
.75	12	18.1
1.50	16	24.5
2.30	20	31.0
3.20	24	37.0

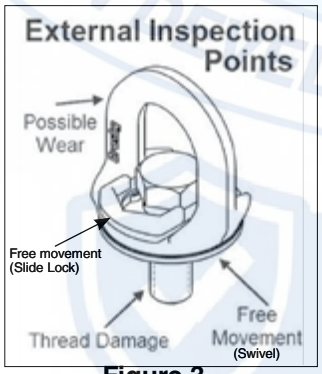

Figure 3

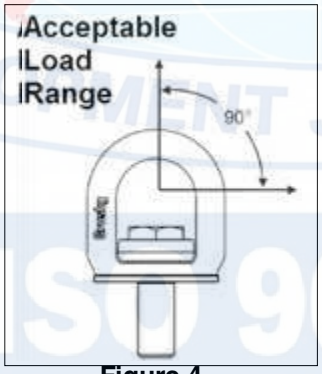

Figure 4

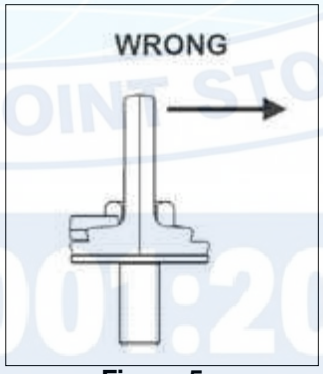

Figure 5

Figure 6

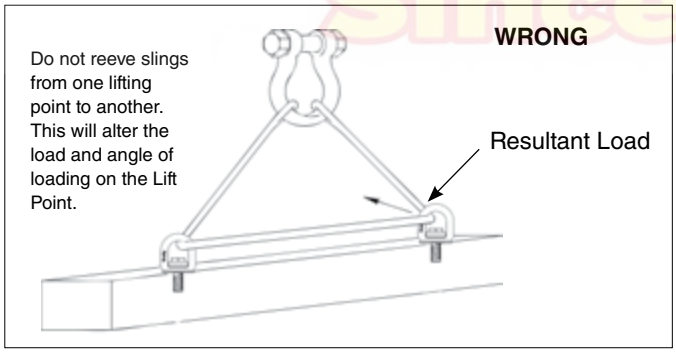

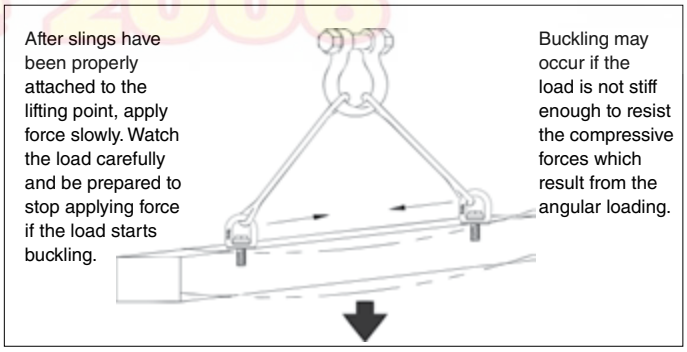

© 2023 The Crosby Group LLC. All Rights Reserved.

Technical Information

The following information aims to give advice and explain the most common questions in order to ensure correct and proper use of lifting points. This technical information refers to RELP, RLP, DLP and BLP unless other is stated. Always refer to the user instructions of the specific model of lifting point before use. It is of the most importance that this information is known to the user and in accordance with the Machinery Directive 2006/42/EC this information must be delivered to the customer. See website or user instructions for assembly instructions. Meets listed current specifications and standards at time of publication of this catalog.

General Advice

Reference should be made to relevant standards and other statutory regulations. Inspections must be carried out only by people who possess sufficient knowledge.

Before installation and before every use, visually inspect the lifting points, paying particular attention to any evidence of corrosion, wear, weld cracks or deformations. Please ensure compatibility of bolt thread and tapped hole.

The material construction, to which the lifting point will be attached, should be of adequate strength to withstand forces during lifting without deformation.

Ensure minimum thread depth, see table (d refers to bolt diameter).

Thread depth	Yield limit of base material
1 x d	For steel, yield limit >200 MPa
1.25 x d	For cast iron, yield limit >200MPa
2.5 x d	Aluminum
	For other metal alloys or base materials consult your Gunnebo Industries distributor.

- If the bolt length needs to be adjusted the bolt should be cut with a cold saw or lathe and temperature kept as low as possible during cutting. After cutting check the shape of the threads nearest the cut with an appropriately sized die (there must not be any burrs).
- The surface facing around the thread hole shall be flat (plane), clear of dirt and smooth to ensure perfect contact with the shoulder surface of the Lifting Point.

Nut and washer

The nut and washer must be the original equipment supplied from Gunnebo Industries to ensure the correct mechanical properties. No warranty, insurance or liability will be accepted if bolts not supplied by Gunnebo Industries have been used.

Extreme Environments

The in-service temperature affects the WLL as follows:

RLP

Temperature (°C)	Reduction of WLL
-40 to + 200 °C	0 %
+200 to + 300 °C	10 %
+300 to + 400 °C	25 %
Temperatures below -40°C or above 400 °C are not allowed.	

RELP

Temperature (°C)	Reduction of WLL
-40 to + 200 °C	0 %
+200 to + 300 °C	15 %
+300 to + 400 °C	20%
+250 to + 350 °C	25 %
Temperatures below -40°C or above 350°C are not allowed.	

BLP / DLP

Temperature (°C)	Reduction of WLL
-40 to + 200 °C	0 %
Temperatures below -40°C or above 200°C are not allowed.	

Severe Environments

Lifting points must not be used in alkaline (> pH10) or in acidic condition (< pH6).
Comprehensive and regular examination must be carried out when used in severe or corrosive environments. In uncertain situations consult your Gunnebo Industries distributor.

Surface Treatment

- Hot dip galvanizing or plating is not allowed outside the control of the manufacturer.
- Acid or Alkaline cleaning is not allowed.

This application/warning information apply to Crosby products only.

© 2023 The Crosby Group LLC. All Rights Reserved.

Protect yourself and others

- Before each use the Lifting Point should be checked for obvious damage or deterioration.
- Know the weight of the load and its center of gravity.
- Ensure the load is ready to move and that no obstacles will obstruct the lifting.
- Check the conformity of the load with the Working Load Limit.
- Prepare the landing site.
- Never overload and avoid shock loading.
- Never use an improper configuration.
- Never use a worn or damaged Lifting Point.
- Do not ever ride on the load.
- Do not ever walk or stand under a suspended load.
- Take into consideration that the load may swing or rotate.
- Watch your feet and fingers while loading/unloading.

Inspection

Periodic thorough examination must be carried out at least every 12 months or more frequently according to local statutory regulations, type of use and past experience.

- Ensure correct bolt and nut size, quality and length.
- Ensure compatibility of bolt thread and tapped hole – control of the torque.
- The lifting point should be complete.
- The working load limit and manufacturers stamp should be clearly visible.
- Check for deformation of the component parts such as body, load ring and bolt.
- Check for mechanical damage, such as notches, particularly in high stress areas.
- Wear should be no more than 10 % of cross sectional diameter.
- Evidence of corrosion.
- Evidence of cracks.
- Damage to the bolt, nut and/or thread.
- The body of the Lifting Point must be free to rotate.

Symmetric Loading Conditions

- For three and four leg lifts, the Lifting Points should be arranged symmetrically around the center of gravity and in the same plane if possible.
- The WLL for Gunnebo Industries Lifting Points is based on symmetrical loading.
- The Lifting Point must be positioned on the load in such way that movement is avoided during lifting.
- For single leg lifts, the lifting point should be vertically above the center of gravity of the load.
- For two leg lifts, the Lifting Points must be equidistant to or above the center of gravity of the load.

Asymmetric Loading Conditions

- For unequally loaded lifts we recommend that the WLL is determined as follows:
- 2-leg slings are calculated as the corresponding 1-leg sling.
- 3 and 4-leg slings are calculated as the as the corresponding 1-leg sling*

**(If 2-legs with full certainty are carrying the major part of the load, the WLL can be calculated as for the corresponding 2-leg sling).*

WLP - WELDING

Preheat the structure if the temperature is below 0°C; otherwise follow AS 1554 or other suitable national standard.

- Ensure that the WLP cannot move during welding by welding the corners of the welding block. Continue the weld around the welding block without interruption in a single operation.
- The nozzle or electrode should be at 45° (see Fig. C), so that the required penetration is obtained. The minimum throat (A) should be maintained.

Product	Min. plate gauge (Rm-1250 N/mm2) tmin (mm)	Min. throat thickness (mm)
WLP 2.5 T	11	11
WLP 4 T	19	13
WLP 7 T	24	16
WLP 10 T	30	18
WLP 16 T	40	20

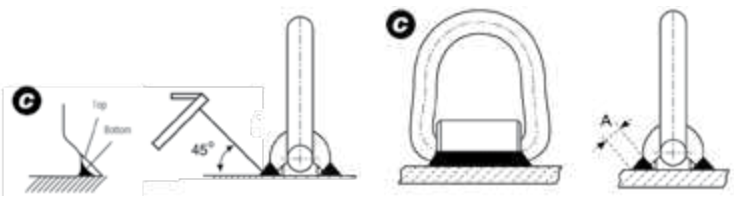

- The weld should not contain cracks or pores.
- Do not cool the weld with water. It should be left to cool naturally.

© 2023 The Crosby Group LLC. All Rights Reserved.

Working Load Limits for WLP

1-leg 2-leg 3- and 4-leg

Typ	WLL tonnes*	α 0-90° β 0-45°	α 90-120° β 45-60°	α 0-90° β 0-45°	α 90-120° β 45-60°
WLP-2.5T	2.5	3.5	2.5	5.2	3.7
WLP-4T	4.0	5.6	4.0	8.4	6.0
WLP-7T	7.0	9.8	7.0	14.8	10.5
WLP-10T	10.0	14.1	10.0	21.2	15.0
WLP-16T	16.0	22.5	16.0	33.6	24.0

Working Load Limits for SLP

1-leg 2-leg 3- and 4-leg

Typ	WLL tonnes*	α 0-90° β 0-45°	α 90-120° β 45-60°	α 0-90° β 0-45°	α 90-120° β 45-60°
SLP-1T	1.0	1.4	1.0	2.1	1.5
SLP-3T	3.0	4.2	3.0	6.3	4.5
SLP-5T	5.0	7.0	5.0	10.6	7.5

Working Load Limits for ELP

1-leg 2-leg 3- and 4-leg

Typ	WLL tonnes*	α 0-90° β 0-45°	α 90-120° β 45-60°	α 0-90° β 0-45°	α 90-120° β 45-60°
ELP-16-8	1.0**	1.4	1.0	2.1	1.5
ELP-20-8	1.5**	2.1	1.5	3.1	2.3
ELP-24-8	2.0**	2.8	2.0	4.2	3.0
ELP-30-8	3.0**	4.2	3.0	6.3	4.5

Note: The above loads apply to normal usage and equally loaded legs. For asymmetric loaded chain slings, the following is recommended:

- A two-legged system is rated as a single-legged system.
- A three- or four-legged system is rated as a two-legged system.

** In case of 1-leg application where loading is limited to straight loading in the direction of thread (no bending force) it is possible to use ELP with four times higher WLL. Note: Threaded depths need to be at least 1xM for steel, 1.25xM for cast iron and 2xM for aluminum alloy.

This application/warning information apply to Crosby products only.

© 2023 The Crosby Group LLC. All Rights Reserved.

Speedbinders TORQUE DRIVE LOAD BINDER

Warnings and Application Instructions

Speedbinders Torque Drive Load Binder

Important Safety Information - Read & Follow

For maximum safety and efficiency, load securement systems must be properly designed, used and maintained. You must understand the use of load binders in a load securement system. These instructions provide this knowledge. Read them carefully and completely.

⚠ WARNING

- **Failure to use this load binder properly may result in serious injury or even death to you or others.**
- **Do not operate load binder while standing on the load.**
- **You must be familiar with state and federal regulations regarding size and number of chain systems required for securing loads on trucks.**
- **Always consider the safety of nearby workers as well as yourself when using load binder.**
- **While under tension, the load binder must not be side loaded.**
- **Chain tension may decrease due to load shifting during transport.**
- **Do not throw these instructions away. Keep them close at hand and share them with any others who use this load binder.**
- **Care should be taken to reduce the speed of the drill as the chain becomes taut, to minimize the twist of the drill. It may be necessary to use both hands to secure the drill at high torque- even at slow speeds.**
- **Use only genuine Speedbinders parts as replacement.**

PRIOR TO USE

- Apply user preferred EP type grease to the gear set via the zerk fitting. Rotate the barrel 180° between applications for best results.
- Add preferred form of lubricant to the threaded posts. Add just enough to reduce the resistance, as overuse of lubricant can cause additional resistance during operation.

Instructions- Torque Drive Load Binder

- Position the Torque Drive load binder so it can be operated from the ground or a stable location. Be aware of ice, snow, rain, oil, etc. that can affect your footing. Make certain your footing is secure.
- Position the load binder with short portion of barrel close to the trailer attachment point, so the reaction bar rests against the floor of the trailer after tensioning. Alternately, position the reaction bar against the object being secured. **Reaction Bar must be positioned against a solid surface for proper retention.**
- Do not attempt to hold the reaction bar to prevent rotation while tensioning. Always hold the drill with two hands, one cradling the battery to prevent twist.

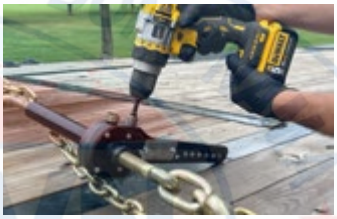

- Tension the Torque Drive binder using a rotation tool such as cordless drill equipped with a 14 mm socket. If the cordless drill is not available, a manual wrench or tool equipped with a 14 mm socket can be used to tighten or loosen.
- To tighten the load binder, the drill rotates the 14 mm hex head clockwise. Loosening is achieved by counterclockwise rotation of the 14 mm hex head.
- Cordless drills with approximately 800 Lb.- In. maximum torque output can be used and provide adequate tensioning for most load securement applications.
- For best results, first run down all binders in the drill's high-speed setting. Then return to each binder and finish tightening in the low-speed/high-torque setting on the drill.
- Never exceed the Working Load Limit of the load binder.
- **Do not use impact drivers,** as the torque of these devices can damage the gears and under-tension the load securement system.
- After tensioning, it should take about 15– 20 pounds of force to pull the reaction bar away from the floor or secured object. Reaction bar should return to surface immediately if pulled on.
- Chain tension may change due to load shifting during transport. Ensure the load binder remains in proper position, and retighten as required.
- When releasing the load, be aware that the load may have shifted, and may have become unstable.

Inspection / Maintenance

- Routinely check load binders for elongation, wear, bending, cracks, nicks, gouges or corrosion. **If bending or cracks are present – Do not use load binder.**
- Routinely (approximately every 30 cycles) grease the gear set through the grease fitting, using a medium consistency EP grease.
- Routinely clean and lubricate screw threads of load binder to extend product life and reduce friction wear.
- Inspect drive bolt head for any signs of wear.
- • After approximately 600 cycles, uninstall the end fittings, clean and re-lubricate the threads, and reinstall. Also, if desired, remove side plates and clear out old grease in gear set. Replace side plates and add enough grease to fill the cavity.

© 2023 The Crosby Group LLC. All Rights Reserved.

Crosby® Load Binder

WARNINGS & APPLICATION INSTRUCTIONS

⚠ WARNING

- **Failure to use this load binder properly may result in serious injury or even death to you or others.**
- **Do not operate load binder while standing on the load.**
- **Move handle with caution. It may whip – Keep body clear.**
- **Keep yourself out of the path of the moving handle and any loose chain laying on the handle.**
- **You must be familiar with state and federal regulations regarding size and number of chain systems required for securing loads on trucks.**
- **Always consider the safety of nearby workers as well as yourself when using load binder.**
- **While under tension, load binder must not bear against an object, as this will cause side load.**
- **Do not throw these instructions away. Keep them close at hand and share them with any others who use this load binder.**
- **Do not use handle extender – see instructions.**
- **Do not attempt to close or open the binder with more than one person.**

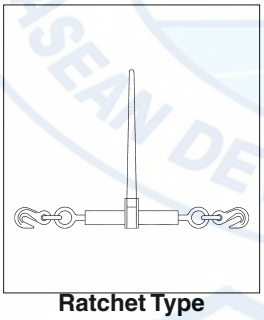

Ratchet Type

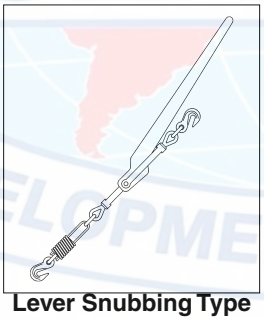

Lever Snubbing Type

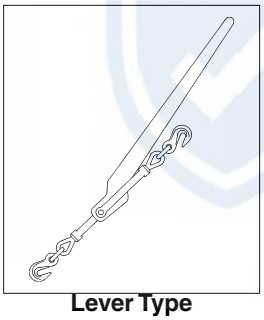

Lever Type

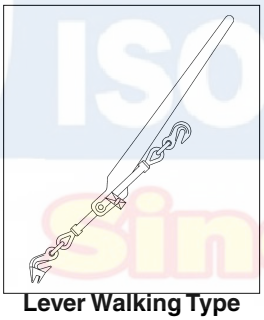

Lever Walking Type

Mechanical Advantage

Lever Type Binder = 25 : 1
Ratchet Type Binder = 50 : 1

Example: 50 kilogrames of effort applied to the binder results in the following force on the binder.

Lever Type:
50kg. x 25 = 1250 kg of force

Ratchet Type:
50kg. x 25 = 2500 kg of force

Instructions – Lever Type Load Binders

- Hook load binder to chain so you can operate it while standing on the ground. Position load binder so its handle can be pulled downward to tighten chain (see photo). **Be aware of ice, snow, rain, oil, etc. that can affect your footing. Make certain your footing is secure.**
- The Crosby Group LLC specifically recommends AGAINST the use of a handle extender (cheater pipe). If sufficient leverage cannot be obtained using the lever type load binder by itself, a ratchet type binder should be used.

- If the above recommendation is disregarded and a cheater pipe is used, it must closely fit the handle and must slide down the handle until the handle projections are contacted. The pipe should be secured to the handle, for example, by a pin, so that the pipe cannot fly off the handle if you lose control and let go. The increased leverage, by using a cheater pipe, can cause deformation and failure of the chain and load binder.
- During and after tightening chain, check load binder handle position. **Be sure** it is in the locked position and that its bottom side touches the chain link.
- Chain tension may decrease due to load shifting during transport. To be sure the load binder remains in proper position: Secure handle to chain by wrapping the loose end of chain around the handle and the tight chain, or tie handle to chain with soft wire.
- When releasing load binder, remember there is a great deal of energy in the stretched chain. This will cause the load binder handle to move very quickly with great force when it is unlatched. **Move handle with caution. It may whip – Keep body clear.**
- **Never use a cheater pipe or handle extender to release handle.** Use a steel bar and pry under the handle and stay out of the path of handle as it moves upward.
- If you release the handle by hand, use an open hand under the handle and push upward. **Do not close your hand around the handle. Always keep yourself out of the path of the moving handle.**

Instructions - Ratchet Load Binders

- Position ratchet binder so it can be operated from the ground.
- **Make sure your footing is secure.**

Maintenance of All Load Binders

- Routinely check load binders for wear, bending, cracks, nicks, or gouges. **If visual wear bending or cracks are present - Do not use load binder.**
- Routinely lubricate pivot and swivel points of Lever Binders, and pawl part and screw threads of Ratchet Binders to extend product life and reduce friction wear.

This application/warning information apply to Crosby products only.

© 2023 The Crosby Group LLC. All Rights Reserved.

Crosby® L-180 WINCHLINE TAIL CHAIN

WARNING & APPLICATION INSTRUCTIONS

L-180

⚠ WARNING

- **Loads may disengage from winchline tail chain if proper procedures are not followed.**
- **A falling load or disengaged winchline tail chain may cause serious injury or death.**
- **Inspect winchline tail chain for damage before each use.**
- **Wire rope should not be terminated to tail chain by the use of a knot.**
- **Do not attach slings or other devices in hook for overhead lifting – see operating practices.**

Important Safety Information – Read & Follow

- Only winchline tail chains made from alloy chain, Grade 80 or Grade 100, should be used for overhead lifting applications.
- Working Load Limit (WLL) is the maximum load in pounds which should ever be applied to winchline tail chain.
- The Working Load Limit or Design Factor may be affected by wear, misuse, overloading, corrosion, deformation, intentional alterations, sharp corner cutting action and other use conditions.
- Never repair, alter, rework, or reshape a hook or chain by welding, heating, burning or bending.
- Recommended for IPS or XIP (EIP), RRL, FC or IWRC wire rope.
- Shock loading and extraordinary conditions must be taken into account when selecting winchline tail chains.

CAUSE FOR REMOVAL FROM SERVICE

A winchline tail chain shall be removed from service if any of the following are visible on chain or hook:

- Wear, nicks, cracks, breaks, gouges, stretch, bend, weld splatter and discoloration from excessive temperature. Minimum thickness on chain link shall not be below the values listed on Table 1.
- Chain links and hook that do not hinge freely to adjacent links.
- Excessive pitting or corrosion on chain, hook or termination fitting.
- Makeshift fasteners, hooks, or links formed from bolts, rods, etc.

Table 1

L-180 Stock No.	Wire Rope Diameter (mm)	Nominal Chain Size (mm)	Nominal Chain Size (in)
1091482	13 - 16	16	5/8
1091511	19 - 22	22	7/8
1091516	25 - 29	26	1
1091525	25 - 29	26	1
1091532	32	32	1-1/4

- Mechanical coupling links in the body of the chain.
- Other damage that would cause a doubt as to the strength of the chain.
- Winchline tail chain should not be subjected to galvanizing or any plating process. If it is suspected the chain has been exposed to chemically active environment, remove from service.
- Termination end attachments that are cracked, deformed, or worn.
- For wire rope inspection procedures and removal from service criteria refer to manufacturer's recommendations.

OPERATING PRACTICES

- Know the winch lifting/pulling systems capacity rating.
- Know the applied load on tail chain. In dragging applications, the applied load may be greater or less than its weight due to friction.
- During lifting/dragging with or without the load, personnel should be alert for possible snagging.
- WORKING LOAD LIMIT (WLL) is the maximum load in pounds which should ever be applied to winchline tail chain when the chain is new or in as-new condition, and when the load is uniformly applied in direct tension to a straight length of chain.

Wire Rope Diameter (mm)	L-180 Stock No.	Working Load Limit 3.5 to 1 Design Factor (kg)
13 - 16	1091482	5900
19 - 22	1091511	15510
25 - 29	1091516	21640
25 - 29	1091525	21640
32	1091532	33200

10mm through 16mm made from Grade 40 High Test carbon steel.
22mm through 32mm made from Grade 80 or Grade 100 alloy steel. Only alloy tail chain should be used for overhead lifting applications.

- Wire rope termination efficiency and tail chain Working Load Limit (WLL) must be considered when selecting termination fitting and tail chain.
- Efficiency of wire rope end termination is based on the catalog breaking strength of wire rope.

Typical Termination Method & Efficiency	
Termination	**Efficiency**
S-409 Swage Button	80%

- The winchline tail chain hook is designed to fit the winchline diameter when hooked or connected back to winchline (See Figure 1).
- When used to pull or drag a load, the winchline tail chain may be wrapped around the load and the hook connected to the winchline. Also, when used to pull or drag a load over the tail board roller, the tail chain hook may be attached directly to the load at a connection point authorized by a competent rigger (See Figure 5). In either case, a visual verification of proper hook engagement is required during the entire operation.
- When used in overhead lifting applications, the winchline tail chain may be wrapped around the load and the hook connected to the winchline (See Figure 1). Used in this manner, this connection provides the same load control advantages and limitations as a single leg wire rope sling basket or choker hitch. The winchline tail chain should contain and support the load from the sides, above center of gravity, so load remains under control.

© 2023 The Crosby Group LLC. All Rights Reserved.

- The winchline tail chain hook is designed to fit the winchline diameter when hooked or connected back to winchline (See Figure 1).
- When used to pull or drag a load, the winchline tail chain may be wrapped around the load and the hook connected to the winchline. Also, when used to pull or drag a load over the tail board roller, the tail chain hook may be attached directly to the load at a connection point authorized by a competent rigger (See Figure 5). In either case, a visual verification of proper hook engagement is required during the entire operation.
- When used in overhead lifting applications, the winchline tail chain may be wrapped around the load and the hook connected to the winchline (See Figure 1). Used in this manner, this connection provides the same load control advantages and limitations as a single leg wire rope sling basket or choker hitch. The winchline tail chain should contain and support the load from the sides, above center of gravity, so load remains under control.
  A visual verification of proper hook engagement is required during the entire operation.
- The tail chain hook has no provision for a latch; therefore, The Crosby Group, LLC. specifically recommends AGAINST placing the load, slings or other devices directly into the tail chain hook for the purpose of overhead lifting. A latch may be mandatory by regulations or safety codes: e.g. OSHA, MSHA, ASME B30, insurance, etc (See Figure 2).

If the above Crosby recommendation is disregarded and slings or other devices are placed directly into the tail chain hook, as a minimum ensure:

- Personnel shall stand clear of the suspended load.
- Visual verification of proper hook engagement is required in all cases.
- The sling or device should be centered in the base (bowl/ saddle) of the hook.
- The user must assure connection to the hook is secure throughout the movement of the load.
- A designated competent rigger must verify that all appropriate rigging practices are followed for attachment and control of load.

- The winchline and tail chain links should always be protected from being damaged by sharp corners (See Figure 3).
- Chain links should not be twisted or kinked.
- Winchline or tail chain should not be pulled from under loads if the load is resting on winchline or tail chain.
- Winchline or tail chain that appears to be damaged should not be used unless inspected and accepted by a designated person.
- Never side load, back load, or tip load hook (See Figura 4).
- All portions of the human body should be kept from between the winchline / tail chain and load.
- Personnel shall stand clear of the suspended load.
- Shock loading should be avoided.
- Extreme Temperatura will reduce the performance of winchline tailchain.
- Normal operating Temperatura is -40°F to 400°F (-40°C to 204°C).

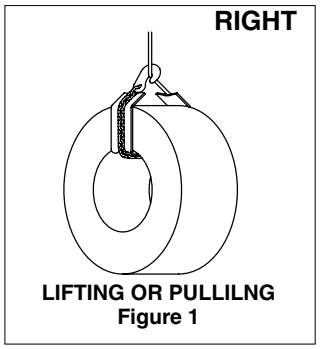

LIFTING OR PULLILNG
Figure 1

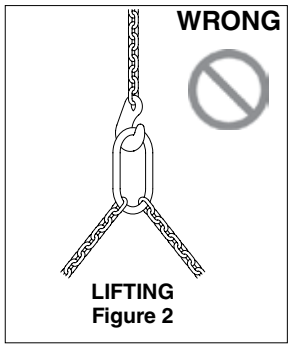

LIFTING
Figure 2

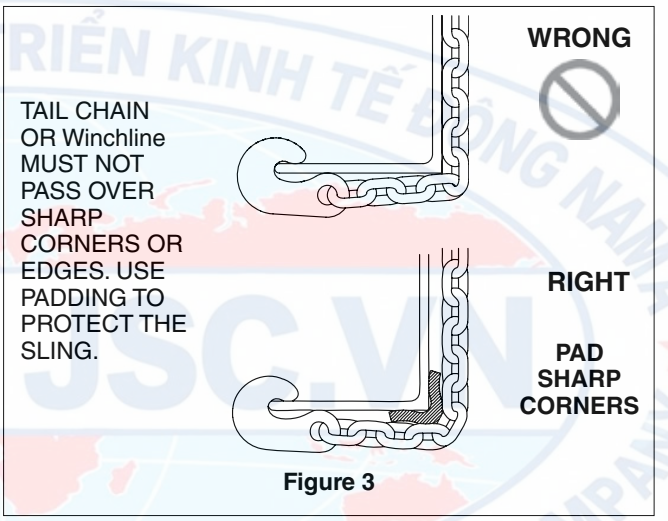

Figure 3

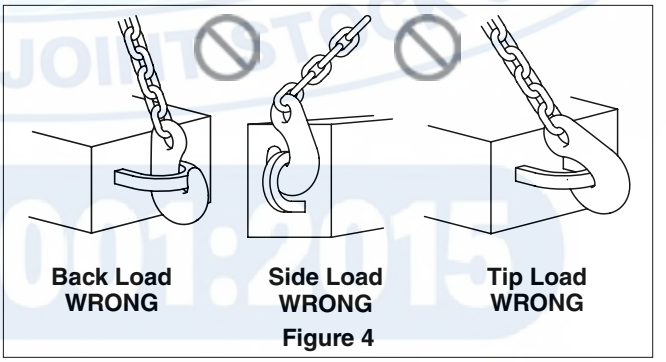

Figure 4

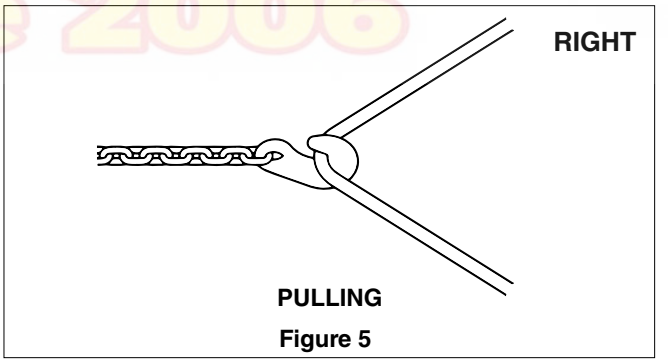

PULLING
Figure 5

This application/warning information apply to Crosby products only.

© 2023 The Crosby Group LLC. All Rights Reserved.

TACKLE BLOCK & SHEAVE ASSEMBLY

WARNINGS, USE AND MAINTENANCE INFORMATION

⚠ WARNING

- **A potential hazard exists when lifting or dragging heavy loads with tackle block assemblies.**
- **Failure to design and use tackle block systems properly may cause a load to slip or fall – the result could be serious injury or death.**
- **Failure to design lifting system with appropriate sheave assembly material for the intended application may cause premature sheave, bearing or Wireline wear and ultimate failure - the result could be serious injury or death.**
- **A tackle block system should be rigged by a qualified person as defined by ANSI/ASME B30.26.**
- **Instruct workers to keep hands and body away from block sheaves and swivels – and away from "pinch points" where rope touches block parts or loads.**
- **Do not side load tackle blocks.**
- **See OSHA Rule 1926.1431(g)(1)(i)(A) and 1926.1501(g)(4)(iv)(B) for personnel hoisting by cranes and derricks, and OSHA Directive CPL 2-1.36 — Interim Inspection Procedures During Communication Tower Construction Activities. Only a Crosby or McKissick Hook with a PL latch attached and secured with a bolt, nut and cotter pin (or toggle pin) or a PL-N latch attached and secured with toggle pin; or a Crosby hook with an S-4320 latch attached and secured with cotter pin or bolt, nut and pin; or a Crosby SHUR-LOC® Hook in the locked position may be used for any personnel hoisting. A hook with a Crosby SS-4055 latch attached shall NOT be used for personnel lifting.**
- **Instruct workers to be alert and to wear proper safety gear in areas where loads are moved or supported with tackle block systems.**
- **Use only genuine Crosby parts as replacement.**
- **Read, understand, and follow these instructions to select, use and maintain tackle block systems.**
- **Do not use a block or ball that does not have a legible capacity tag.**

Important:

For maximum safety and efficiency, tackle block and sheave systems must be properly designed, used, and maintained. You must understand the use of tackle block components and sheaves in the system. The responsibility for the use and application of products rests with the user. Read them carefully and completely.

Some parts of these instructions must use technical words and detailed explanations. NOTE: If you do not understand all words, diagrams, and definitions – **A block and system must be designed by a qualified person.** For further assistance, call:

In U.S.A. – Crosby Engineered Products Group at (800) 777-1555.
In CANADA – Crosby Canada, Ltd. (877) 462-7672.
In EUROPE – N.V. Crosby Europe (+32)(0) 15 75 71 25.

As you read instructions, pay particular attention to safety information in bold print.

KEEP INSTRUCTIONS FOR FUTURE USE – DO NOT THROW AWAY!

General Cautions or Warnings

Ratings shown in Crosby Group literature are applicable only to new or in "as new" products.

Working Load Limit ratings indicate the greatest force or load a product can carry under usual environmental conditions. Shock loading and extraordinary conditions must be taken into account when selecting products for use in tackle block systems. Working Load Limit ratings are based on all sheaves of tackle block system being utilized. If all sheaves are not utilized, balance must be maintained, and the Working Load Limit must be reduced proportionally to prevent overloading sheave components. Changes from full sheave reeving arrangement should be only at the recommendation of a qualified person, and incorporate good rigging practices.

In general, the products displayed in Crosby Group literature are used as parts of a system being employed to accomplish a task. Therefore, we can only recommend within the Working Load Limits, or other stated limitations, the use of products for this purpose.

The Working Load Limit or Design (Safety) Factor of each Crosby product may be affected by wear, misuse, overloading, corrosion, deformation, intentional alteration, and other use conditions. Regular inspection must be conducted to determine whether use can be continued at the catalog assigned WLL, a reduced WLL, a reduced Design (Safety) Factor, or withdrawn from service.

Crosby Group products generally are intended for tension or pull. Side loading must be avoided, as it exerts additional force or loading which the product is not designed to accommodate.

Always make sure the hook supports the load. The latch must never support the load.

Welding of load supporting parts or products can be hazardous. Knowledge of materials, heat treatment, and welding procedures are necessary for proper welding. Crosby Group should be consulted for information.

Crane component parts, i.e., the boom, block, overhaul ball, swivel, and wire ropes are metallic and will conduct electricity. Read and understand OSHA standard covering crane and derrick operations (29 CFR 1926.1501 SUBPART N) before operating proximate to power lines.

Definitions

STATIC LOAD – The load resulting from a constantly applied force or load.

WORKING LOAD LIMIT – The maximum mass or force which the product is authorized to support in general service when the pull is applied in-line, unless noted otherwise, with respect to the center line of the product. This term is used interchangeably with the following terms.

1. WLL
2. Rated Load Value
3. SWL
4. Safe Working Load
5. Resultant Safe Working Load

WORKING LOAD – The maximum mass or force which the product is authorized to support in a particular service.

PROOF LOAD – The average force applied in the performance of a proof test; the average force to which a product may be subjected before deformation occurs.

PROOF TEST – A test applied to a product solely to determine non-conforming material or manufacturing defects.

ULTIMATE LOAD – The average load or force at which the product fails, or no longer supports the load.

© 2023 The Crosby Group LLC. All Rights Reserved.

SHOCK LOAD – A force that results from the rapid application of a force (such as impacting and/or jerking) or rapid movement of a static load. A shock load significantly adds to the static load.

DESIGN (SAFETY) FACTOR – An industry term denoting a product's theoretical reserve capability, usually computed by dividing the catalog Ultimate Load by the Working Load Limit. Generally expressed for blocks as a ratio of 4:1.

TACKLE BLOCK – An assembly consisting of a sheave(s), side plates, and generally an end fitting (hook, shackle, etc.) that is used for lifting, lowering, or applying tension.

SHEAVE / SHEAVE BEARING ASSEMBLY – Purchased by O.E.M. or end user to be used in their block or lifting system design.

Fitting Maintenance

Fittings, including hooks, overhaul balls, shackles, links, etc., may become worn and disfigured with use, corrosion, and abuse resulting in nicks, gouges, worn threads and bearings, sharp corners which may produce additional stress conditions and reduce system load capacity.

Grinding is the recommended procedure to restore smooth surfaces. The maximum allowance for reduction of a product's original dimension due to wear or repair before removal from service is:

1. Any single direction - No more than 10% of original dimension;
2. Two directions - No more than 5% of each dimension.

For detailed instructions on specific products, see the application and warning information for that product. Any greater reduction may necessitate a reduced Working Load Limit.

Any crack or deformation in a fitting is sufficient cause to withdraw the product from service.

Selection Guide

Some of the blocks shown in Crosby Group literature are named for their intended use and selection is routine. A few examples include the "Double Rig Trawl Block" used in the fishing industry, the "Well Loggers Block" used in the oil drilling industry, and the "Cargo Hoisting Block" used in the freighter boat industry and "Derrick and Tower Block" used for hoisting personnel. Others are more generally classified and have a variety of uses. They include snatch blocks, regular wood blocks, standard steel blocks, etc. For example, snatch blocks allow the line to be attached by opening up the block instead of threading the line through the block. This feature eliminates the use of rope guards and allows various line entrance and exit angles to change direction of the load. These angles determine the load on the block and/or the block fitting (See "Loads on Blocks."). Snatch blocks are intended for infrequent and intermittent use with slow line speeds.

A tackle block sheave assembly is one element of a system used to lift, change direction or drag a load. There are other elements in the system including the prime mover (hoist, winch, hand), supporting structure, power available, etc. All of these elements can influence the type of tackle block or sheave required. When selecting a block or sheave for the system in your specific application, you should consider the other elements as well as the features of the blocks and sheaves shown in Crosby Group literature.

To select a tackle block or sheave to fit your requirements, consider the following points:

1. Are there regulations which could affect your choice of blocks or sheaves, such as federal or state, OSHA, elevator safety, mine safety, maritime, insurance, etc.?
2. What is the weight of the load, including any dynamics of impacts that add to load value? You must know this to determine the minimum required Working Load Limit value of the block or load on sheave.
3. How many parts of line are required? This can be determined given the load to be lifted and the line pull you have available. As an alternative, you could calculate the line pull required with a given number of parts of line and a given load weight.
   (See "How to Figure Line Parts.")
4. What is the size of line to be used? Multiply the available line pull by the desired safety factor for Wireline to determine the minimum catalog Wireline breaking strength; consult a Wireline catalog for the corresponding grade and diameter of Wireline to match. You should also consider fatigue factors that affect Wireline life (See "Sheave Size & Wireline Strength").
5. What is the speed of the line? This will help you determine the type of sheave bearing necessary. There are several choices of bearings suitable for different applications, including:
   A. Common (Plain) Bore for very slow line speeds and very infrequent use (high bearing friction).
   B. Self Lubricating Bronze Bushings for slow line speeds and infrequent use (moderate bearing friction).
   C. Bronze Bushing with pressure lubrication for slow line speeds and more frequent use at greater loads (moderate bearing friction).
   D. Anti-friction Bearings for faster line speeds and more frequent use at greater loads (minimum bearing friction).
6. What type of fitting is required for your application? The selection may depend on whether the block will be traveling or stationary. Your choices include single or multiple hooks with or without throat latches and shackles, which are the most secured load attachment. You should also decide whether the fitting should be fixed, swivel or swivel with lock. If it is a swivel fitting, then selection of a thrust bearing may be necessary. There are plain fittings with no bearings for positioning at no load, bronze bushed fittings for infrequent and moderate load swiveling, and anti-friction bearing equipped fittings for frequent load swiveling.
7. How will the block be reeved and does it require a dead end becket? (See "The Reeving of Tackle Blocks.")
8. How will the block be reeved and does it require a dead end becket? (See "The Reeving of Tackle Blocks.")
9. If the block is to be a traveling block, what weight is required to overhaul the line? (See "How to Determine Overhaul Weights.")
10. What is the fleet angle of the Wireline? Line entrance and exit angles should be no more than 1-1/2 degrees.
11. How will the block or sheave be maintained? Do conditions in your application require special maintenance considerations? (See "Tackle Block and Sheave Maintenance," and "Fitting Maintenance.")
12. Reference current edition of "Wireline Users Manual" for additional sheave design and maintenance information.

This application/warning information apply to Crosby products only.

© 2023 The Crosby Group LLC. All Rights Reserved.

Tackle Block and Sheave Maintenance

Tackle Blocks and Sheaves must be regularly inspected, lubricated, and maintained for peak efficiency and extended usefulness. Their proper use and maintenance is equal in importance to other mechanical equipment. The frequency of inspection and lubrication is dependent upon frequency and periods of use, environmental conditions, and the user's good judgment.

Inspection: As a minimum, the following points should be considered:

1. Wear on pins or axles, rope grooves, side plates, bushing or bearings, cases, trunnions, hook shanks, and fittings (See Fitting Maintenance). Excessive wear may be a cause to replace parts or remove block or sheave from service.
2. Deformation in side plates, pins and axles, fitting attachment points, trunnions, etc. Deformation can be caused by abusive service or overload and may be a cause to remove block or sheave from service.
3. Misalignment or wobble in sheaves.
4. Security of nuts, bolts, and other locking methods, especially after reassembly following a tear down inspection. Original securing method should be used; e.g., staking, set screw, cotter pin, cap screw.
5. Pins retained by snap rings should be checked for missing or loose rings.
6. Sheave pin nuts should be checked for proper positioning. Pins for tapered roller bearings should be tightened to remove all end play during sheave rotation. Pins for bronze bushings and straight roller bearings should have a running clearance of .031 inch per sheave of end play and should be adjusted accordingly.
7. Hook or shackle to swivel case clearance is set at .031 to .062 at the factory. Increased clearance can result from component wear. Clearance exceeding .12 to .18 should necessitate disassembly and further inspection.
8. Deformation or corrosion of hook and nut threads. Your block's hook may be fitted with the Crosby/McKissick Patented Split Nut. Refer to the Split Nut section for proper removal, inspection and installation procedures.
9. Loss of material due to corrosion or wear on external area of welded hook and nut may indicate thread corrosion or damage. If these conditions exist, remove from service or perform load test.
10. Surface condition and deformation of hook (See Fitting Maintenance and ASME B30.10.)
11. Welded side plates for weld corrosion or weld cracking.
12. Hook latch for deformation, proper fit and operation.
13. Remove from service any bushings with cracks on inside diameter or bushing end. Bushings that are cracked and/or extended beyond sheave hub are indications of bushing overload.

LUBRICATION: The frequency of lubrication depends upon frequency and period of product use as well as environmental conditions, which are contingent upon the user's good judgment. Assuming normal product use, the following schedule is suggested when using lithium-base grease of a medium consistency.

SHEAVE BEARINGS

Tapered Roller Bearings – Every 40 hours of continuous operation or every 30 days of intermittent operation.
Roller Bearings – Every 24 hours of continuous operation or every 14 days of intermittent operation.
Bronze Bushings – (Not Self Lubricated) – Every 8 hours of continuous operation or every 14 days of intermittent operation.
Self Lubricating Bronze Bushing – are for slow line speeds and infrequent use (moderate bearing friction). Frequent inspection is required to determine the condition of bushing.

HOOK BEARINGS

Anti Friction – Every 14 days for frequent swiveling; every 45 days for infrequent swiveling.
Bronze Thrust Bushing or No Bearing Every 16 hours for frequent swiveling; every 21 days for infrequent swiveling.

Tackle Block Maintenance also depends upon proper block selection (see "Loads on Blocks"), proper reeving (see "The Reeving of Tackle Blocks"), consideration of shock loads, side loading, and other adverse conditions.

Sheave Bearing Application Information

Sheaves in a system of blocks rotate at different rates of speed, and have different loads. When raising and lowering, the line tension is not equal throughout the system. Refer to "How to Figure Line Parts" in the Sheaves Section for assistance in determining lead line loads used for bushing or bearing selection.

BRONZE BUSHINGS

Bronze Bushings are used primarily for sheave applications using slow line speed, moderate load, and moderate use. The performance capability of a bearing is related to the bearing pressure and the bearing surface velocity by a relationship known as true PV (Maximum Pressure - Velocity Factor). The material properties of the Bronze Bushings furnished as standard in Crosby catalog sheaves are:

(BP) Maximum Bearing Pressure :4500 PSI
(BV) Maximum Velocity at Bearing :1200 FPM
(PV) Maximum Pressure Velocity Factor: 55000

(It should be noted that due to material property relations, the maximum BP times the maximum BV is NOT equal to the maximum PV.)

Formula for Calculating Bearing Pressure:

$$BP = \frac{\text{Line Pull x Angle Factor}}{\text{Shaft Size x Hub Width}}$$

Note: Angle Factor Multipliers listed in the Sheaves Section

Formula for Calculating Bearing Velocity:

$$BV = \frac{PV}{BP}$$

Formula for Calculating Line Speed:

$$\text{Line Speed} = \frac{\text{BV (Tread Diameter + Rope Diameter)}}{\text{Shaft Diameter}}$$

Calculations can be made to find the maximum allowable line speed for a given total sheave load. If the required line speed is greater than the maximum allowable line speed calculated, then increase the shaft size and/or the hub width and recalculate. Continue the process until the maximum allowable line speed is equal to or exceeds the required line speed.

Example

Using a 14 in. sheave (Stock # 917191; refer to Wireline sheave section of this Catalog for dimensions)with a 4,600 lbs line pull and an 80° angle between lines, determine maximum allowable line speed.

$$BP = \frac{\underset{\text{(Line pull) (Angle Factor)}}{\text{4,600 lbs x 1.53}}}{\underset{\text{(Shaft Size) (Hub Width)}}{\text{1.50 x 1.62}}} = \text{2,896 PSI}$$

$$BV = \frac{\text{55,000 (PV Factor)}}{\text{2,896 (BP)}} = \text{19 FBM Allowable}$$

© 2023 The Crosby Group LLC. All Rights Reserved.

Line Speed =
[19 x (11.75 + .75)] ÷ 1.50 = 158.3 FPM ALLOWABLE
(BV) (Tread Dia. + Rope Size) ÷ (Shaft Dia.)

If the application required a line speed equal to 200 FPM, then another calculation would be necessary. Trying another 14 in. sheave (stock # 4104828) under the same loading conditions, the results are as follows:

BP = (4,600 lbs x 1.53) ÷ (2.75 x 2.31) = 1,108 PSI

BV = 55,000 ÷1,108 = 50 FPM

Line Speed =
[50 x (11.75 + .75)] ÷ 2.75 = 227.3 FPM ALLOWABLE

COMMON (PLAIN) BORE –
Very slow line speed, very infrequent use, low load.

ROLLER BEARING –
Faster line speeds, more frequent use, greater load. Refer to manufacturer's rating. Reference appropriate bearing manufacturer's catalog for proper bearing selection procedure.

Loads on Blocks

The Working Load Limit (WLL) for Crosby Group blocks indicates the maximum load that should be exerted on the block and its connecting fitting.

This total load value may be different from the weight being lifted or pulled by a hoisting or hauling system. It is necessary to determine the total load being imposed on each block in the system to properly determine the rated capacity block to be used.

A single sheave block used to change load line direction can be subjected to total loads greatly different from the weight being lifted or pulled. The total load value varies with the angle between the incoming and departing lines to the block.

The following chart indicates the factor to be multiplied by the line pull to obtain the total load on the block.

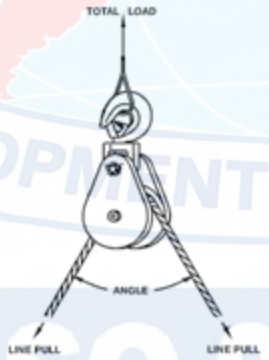

Angle Factor Multipliers			
Angle	**Factor**	**Angle**	**Factor**
0°	2.00	100°	1.29
10°	1.99	110°	1.15
20°	1.97	120°	1.00
30°	1.93	130°	.84
40°	1.87	135°	.76
45°	1.84	140°	.68
50°	1.81	150°	.52
60°	1.73	160°	.35
70°	1.64	170°	.17
80°	1.53	180°	.00
90°	1.41	—	—

Example A

(Calculations for determining total load value on single line system.)

A gin pole truck lifting 1,000 kg

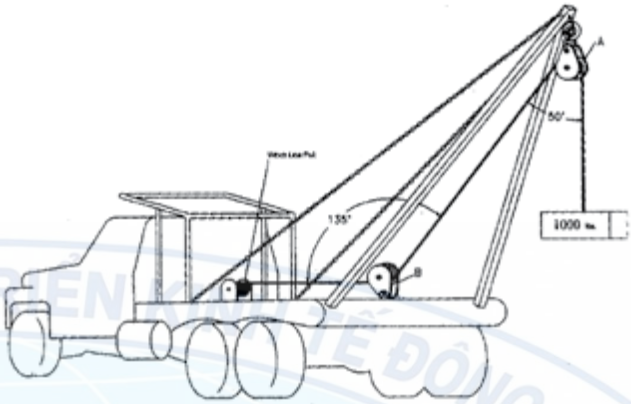

There is no mechanical advantage to a single part load line system, so winch line pull is equal to 1,000 kg or the weight being lifted.

To determine total load on snatch block A:
A = 1,000 kg x 1.81 = 1,810 kg
(line pull) (factor 50° angle)

To determine total load on toggle block B:
B = 1,000 kg x .76 = 760 kg
(line pull) (factor 135° angle)

This application/warning information apply to Crosby products only.

© 2023 The Crosby Group LLC. All Rights Reserved.

Example B
(Calculation for determining total load value for mechanical advantage system.)

Hoisting system lifting 1,000 kg using a traveling block. The mechanical advantage of traveling block C is 2.00 because two (2) parts of load line support the 1,000 kg weight. (Note that this example is simplified for determination of resultant load on blocks. Lead line pull will be greater than shown due to efficiency losses.) (To determine single line pull for various bearing efficiency see "How to Figure Line Parts".)
To Determine Line Pull:
Line Pull = 1,000 kg ÷ 2.00 = 500 kg

To determine total load on traveling block C:
C = 500 kg x 2.0 = 1,000 kg.
(line pull)(Factor 0° angle)

To determine total load on stationary block D:
D = 500 kg x 1.87 + 500 kg = 1,435 kg
(line pull) (dead-end load)
(Factor 40° angle)

To determine total load on block E:
E = 500 kg x .84 = 420 kg
(line pull) (Factor 130° angle)

To determine total load on block F:
F = 500 kg x 1.41 = 705 kg
(line pull) (Factor 90° angle)

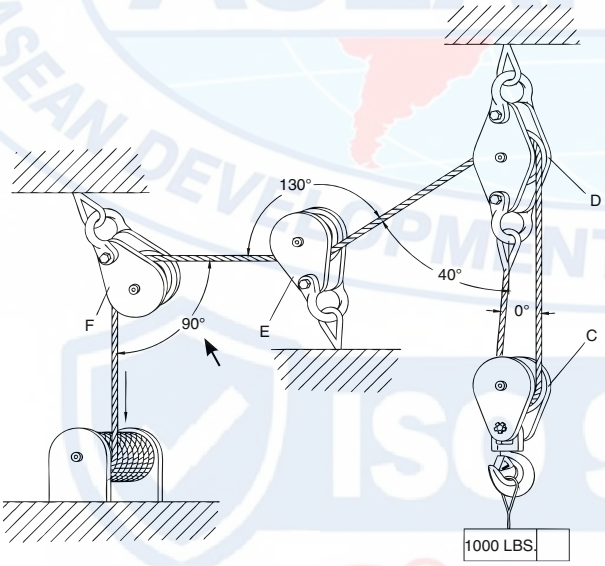

The Reeving of Tackle Blocks

In reeving of tackle blocks, there are many methods. The method discussed below is referred to as "Right Angle" reeving. Please consult your rigging manual for other methods of reeving.

RIGHT ANGLE REEVING

In reeving a pair of tackle blocks, one of which has more than two sheaves, the hoisting rope should lead from one of the center sheaves of the upper block to prevent toppling and avoid injury to the rope. The two blocks should be placed so that the sheaves in the upper block are at right angles to those in the lower one, as shown in the following illustrations.

Start reeving with the becket or dead end of the rope. **Use a shackle block as the upper one of a pair and a hook block as the lower one as seen below.** Sheaves in a set of blocks revolve at different rates of speed. Those nearest the lead line revolve at the highest rate of speed and wear out more rapidly. All sheaves should be kept well lubricated when in operation to reduce friction and wear.

Reeving Diagram

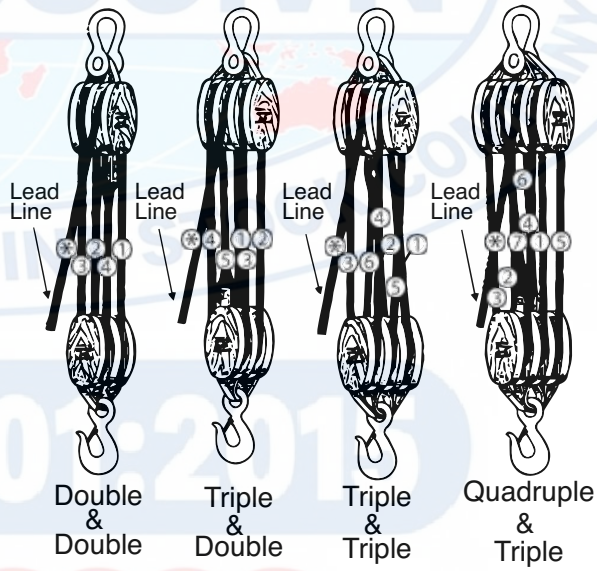

⚠ CAUTION

- **Exercise care when block is standing in vertical position, as the potential for tipping exists. Potential causes of tipping are unstable work area, boom movement and the reeving process.**
- **If work area is unstable, lay block flat on side plate.**

© 2023 The Crosby Group LLC. All Rights Reserved.

Sheave Size & Wireline Strength

Strength Efficiency

Bending Wireline reduces its strength. To account for the effect of bend radius on Wireline strength when selecting a sheave, use the table below:

Ratio A	Strength Efficiency Compared to Catalog Strength in %
40	95
30	93
20	91
15	89
10	86
8	83
6	79
4	75
2	65
1	50

$$\text{Ratio A} = \frac{\text{Sheave Diameter}}{\text{Rope Diameter}}$$

Example
To determine the strength efficiency of 1/2" diameter Wireline using a 10" diameter sheave:

$$\text{Ratio A} = \frac{\text{10" (sheave diameter)}}{\text{1/2" (Wireline diameter}} = 20$$

Refer to ratio A of 20 in the table then check the column under the heading "Strength Efficiency Compared to Catalog Strength in %"..91% strength efficiency as compared to the catalog strength of Wireline.

Fatigue Life

Repeated bending and straightening of Wireline causes a cyclic change of stress called "fatiguing." Bend radius affects Wireline fatigue life. A comparison of the relative effect of sheave diameter on Wireline fatigue life can be determined as shown below:

Ratio B	Relative Fatigue Bending Life
30	10.0
25	6.6
20	3.8
18	2.9
16	2.1
14	1.5
12	1.1

$$\text{Ratio B} = \frac{\text{Sheave Diameter}}{\text{Rope Diameter}}$$

$$\text{Relative Fatigue Bending Life} = \frac{\text{Relative Fatigue Bending Life Sheave \#1}}{\text{Relative Fatigue Bending Life (Sheave \#2)}}$$

Example
To determine the extension of fatigue life for a 20mm Wireline using a 600mm diameter sheave versus a 320mm diameter sheave:

$$\text{Ratio B} = \frac{\text{600mm (sheave diameter)}}{\text{20mm (Wireline diameter)}} = 30$$

$$\text{Ratio B} = \frac{\text{320mm (sheave diameter)}}{\text{20mm (Wireline diameter)}} = 16$$

The relative fatigue bending life for a ratio B of 16 is 2.1 (see above Table) and ratio B of 30 is 10.

$$\text{Relative Fatigue Bending Life} = \frac{10}{2.1} = 4.7$$

Therefore, we expect extension of fatigue life using a 600mm diameter sheave to be 4.7 times greater than that of a 320mm diameter sheave.

This application/warning information apply to Crosby products only.

© 2023 The Crosby Group LLC. All Rights Reserved.

How to Determine Overhauling Weights

To determine the weight of the block or overhaul ball that is required to free fall the block, the following information is needed: size of Wireline, number of line parts, type of sheave bearing, length of crane boom, and drum friction (use 25kg unless other information is available).

Wireline Size (in)	Factor A – Wireline Weight (lbs per ft) 6 x 19 IWRC
3/8	.26
7/16	.35
1/2	.46
9/16	.59
5/8	.72
3/4	1.04
7/8	1.42
1	1.85
1-1/8	2.34
1-1/4	2.89

	Factor B – Overhaul Factors	
Number of Line Parts	Roller Bearing Sheaves	Bronze Bushed Sheaves
1	1.03	1.05
2	2.07	2.15
3	3.15	3.28
4	4.25	4.48
5	5.38	5.72
6	6.54	7.03
7	7.73	8.39
8	8.94	9.80
9	10.20	11.30
10	11.50	12.80

The Formula is:

Required Block Weight = [(Boom Length x Factor A) + Drum Friction] x Factor B

Example:
To determine the required block or overhaul weight using 5 parts of 7/8" diameter Wireline, a 50 ft. boom and roller bearing sheaves:

Required Block Weight = [(50 ft. x 1.42) + 50 lbs.] x 5.38 = 651 lbs.
(Boom Length) (Factor A) (Drum Friction) (Factor B)

How to Figure Line Parts

Sheaves in a system of blocks rotate at different rates of speed, and have different loads. When raising and lowering, the line tension is not equal throughout the system. To help figure the number of parts of line to be used for a given load, or the line pull required for a given load, (for example, use Reeving Diagram on page 385. Only numbered lines shall be used in the calculation). The following ratio table is provided with examples of how to use it. The ratios are applicable for blocks as shown on page 385 and also independent sheave systems that line is reeved through.

Ratio A Bronze Bushed Sheaves	Ratio B Anti-Friction Bearing Sheaves	Number of Line Parts
.96	.98	1
1.87	1.94	2
2.75	2.88	3
3.59	3.81	4
4.39	4.71	5
5.16	5.60	6
5.90	6.47	7
6.60	7.32	8
7.27	8.16	9
7.91	8.98	10
8.52	9.79	11
9.11	10.60	12
9.68	11.40	13
10.20	12.10	14
10.70	12.90	15
11.20	13.60	16
11.70	14.30	17
12.20	15.00	18
12.60	15.70	19
13.00	16.40	20

$$\textbf{Ratio A or B} = \frac{\textbf{Total Load to be Lifted}}{\textbf{Single Line Pull (kg)}}$$

After calculating Ratio A or B, consult table to determine number of parts of line.

Examples:
To find the number of parts of line needed when weight of load and single line pull are known, and using Bronze Bushed Sheaves.

$$\textbf{Ratio A} = \frac{\textbf{72,180 kg (load to be lifted)}}{\textbf{8000 kg (single line pull)}} = \textbf{9.02 (Ratio A)}$$

In table above refer to ratio 9.02 or next higher number, then check column under heading "Number of Line Parts" = 12 parts of line to be used for this load.

To find the single line pull needed when weight of load and number of parts of line are known, and using Anti-Friction Bearing Sheaves.

$$\textbf{Single Line Pull} = \frac{\textbf{68,000 kg (load to be lifted)}}{\textbf{7.32 (Ratio B of 8 part line}} = \textbf{9,290 kg}$$

9,290 kg single line pull required to lift this load on 8 parts of line.

© 2023 The Crosby Group LLC. All Rights Reserved.

To find the lift capacity when the parts of line and single line pull are known, and using anti-friction bearing sheaves.

10,000 kg	**(Single line pull)**
x 4.71	**(Ratio B of 5 parts of line)**
= 47.100 kg	**(Lift Capacity)**

10,000 kg single line pull with 5 parts of line will accommodate 47.100 kg lift capacity.

Repairs

For repair of blocks, contact the following numbers for return material authorization.

IN U.S.A. – Crosby Engineered Products Group at (800) 777-1555

IN CANADA – Crosby Canada at (877) 462-4672

IN EUROPE – N.V. Crosby Europe at (+32) (0)15 75 71 25

Your block, after receipt by Crosby, will be inspected and a free estimate of repair charges will be provided. Authorization for repairs from block owners must be given to Crosby before repairs are made. Transportation charges, both to and from factory, are to be paid by the block owner.

ASEAN JSC.VN
ASEAN DEVELOPMENT JOINT STOCK COMPANY
ISO 9001:2015
Since 2006

This application/warning information apply to Crosby products only.

© 2023 The Crosby Group LLC. All Rights Reserved.

INNOVATIVE MOORING SOLUTIONS, NOW FROM THE CROSBY GROUP

Crosby Feubo mooring components are manufactured using state-of-the-art technologies and processes, delivering quality, precision-engineered products for the offshore oil and gas and wind energy markets.

Kenter links
Anchor shackles
Connectors
H-Links
Swivels
Sockets
Chasers
KS Hooks
Plates
Bridles
Plus more...

The world's first Grade R6 High Fatigue Life Kenter Link

For decades, The Crosby Group has developed products that exceed the toughest industry requirements. The new HFL NDur Link has been carefully designed and tested to offer the combination of the highest material grade and MBL strength definedfor offshore mooring connectors with the high fatigue life of the industry leading Crosby Feubo NDur Kenter.

The HFL NDur Link features the unique 'Fastlock' system that is proven to reduce project downtime and mitigate risk compared to conventional assembly and disassembly methods.

Crosby® | feubo

thecrosbygroup.com/feubo

ASEAN JSC.VN

171 ... 341
401 ... 339
402 ... 338
404 ... 338
406 ... 339
407 ... 339
408 ... 340
409 ... 340
416 ... 336
417 ... 334
418 ... 337
419 ... 335
420 ... 337
421 ... 335
430 ... 337
431 ... 335
434 ... 337
435 ... 335
443 ... 341
458 ... 345
459 ... 345
475 ... 344
476 ... 344
477 ... 344
731 ... 345
380 Series Blocks ... 312
380 Series Easy Reeve Blocks ... 314
381-SY ... 318
401 / 402 / 404 HDG ... 233
461 / 463 ... 356
680 Series Constructions Blocks ... 320
70-Series Tubing Blocks ... 343
750-Series Block ... 322
801 / 802 / 804 Alloy Steel ... 233
80-Series Tubing Blocks ... 343
861 ROV ... 206
863 ROV ... 207
A-1328 ... 176
A-1329 ... 175
A-1337 ... 171
A-1338 / L-1338 ... 173
A-1343 ... 134
A-1346 ... 135
A-1348 ... 176
A-1355 ... 179
A-1358 / L-1358 ... 173
A-1359 ... 175
A-1361 ... 172
A-1362 ... 172
A-1370 ... 174
A-323 ... 296
A-330 ... 296
A-331 ... 296
A-336 ... 179
A-341 ... 141
A-342 ... 136
A-344 ... 138
A-345 ... 137
A-347 ... 139
A-350L ... 113
A-378 ... 114
Accessories ... 61
API 2C Systems ... 317
Arctic 856 ... 42
AS-1 ... 118
AS-11 ... 120
AS-14 ... 120
AS-15 ... 330
AS-17 ... 120
AS-2 ... 118
AS-3 ... 119
AS-4 ... 119
AS-5 ... 119
AS-6 ... 119
AS-7 ... 120
BaseStation ... 60
BC-751 ... 322
BC-752 ... 322
BK - Offshore ... 126
BK - Grade 10 ... 122
BK - Grade 8 ... 128
BK - Grade 8 ... 129
BK - Spare Parts ... 131
BK / BKLK - Offshore ... 126
BKD - Grade 10 ... 122
BKD / BKLKD - Spare Parts ... 131
BKG ... 154
BKG ... 159
BKGC ... 154
BKH ... 159
BKL / BKLK - Grade 10 ... 123
BKL HDG - Grade 8 ... 128
BKLK - Grade 8 ... 129
BKLK HDG - Offshore ... 126
BKT - Grade 10 ... 122
BL ... 160
BLA - Spare Parts ... 167
BLOKALERT System ... 57
BLOKCAM Camera System ... 50
BLP M / BLP UNC ... 256
Blue Link ... 52
Bolt On Line Tensionmeter (BOLT) ... 55
Bow 854 / 855 ... 41
Bronze Bushed Sheaves ... 303
C1513 ... 156
C2247 ... 156
C-720 ... 336
CableSafe ... 56
CEL ... 154
CG / CGD ... 151
CH - Grade 10 ... 124
Chain KLA (200) ... 161
Chain KLA (400) ... 161
Chain Slings ... 168
ChainSafe ... 59
CL / CLD ... 151
Clamp On Line Tensionmeter (COLT) ... 54
Closed Swivel Bail ... 108
CLS ... 166
Common Bore Sheaves ... 302
Compression Load Cell ... 70
CS ... 166
D - Master Link ... 257
Dee 834 / 835 ... 40
DLP M / DLP UNC ... 255
E-566 / J-566 ... 352
EGK / EGKN ... 153
EGKN ... 159
EK / EKN - Grade 10 ... 124
EK / EKN - Grade 8 ... 129
ELP ... 257
ESKN / SKN ... 158
F-453 / F-454 / J-454 ... 351
G Coupling Link - Grade 10 ... 154
G Coupling Link - Grade 11 ... 160
G HDG Coupling Link - Grade 8 ... 155
G-209 / S-209 ... 24
G-209A ... 28
G-209R ... 207
G-210 / S-210 ... 25
G-2100 ... 204
G-2110 ... 204
G-213 / S-213 ... 22
G-2130 / S-2130 ... 26

© 2023 The Crosby Group LLC. All Rights Reserved.

G-2130A 29
G-2130CT / G-2140CT 36
G-2140 / S-2140 30
G-2140E 31
G-215 / S-215 23
G-2150 / S-2150 27
G-2160 /S-2160 33
G-2160E 34
G-2169 / S-2169 28
G-277....236
G-3315 113
G-334 / G-335....181
G-340 / S-340....140
G-341 / S-341 141
G-400....238
G-402.... 115
G-403.... 115
G-408....201
G-411 201
G-414 / G-414 SL 202
G-416 / S-416 193
G-417 / S-417 194
G-42100H 205
G-429....187
G-450....186
G-460....187
G-461....187
GBK....154
Geared Trolleys....87
GF Coupling Link....153
GG / GG-LP....152
GKC....154
GKN / OKN - Spare Parts....131
GrabiQ Chain Slings....148
GrabiQ Components....146
GrabiQ FlexiLeg 147
GT....150
Handheld Plus 65
HF1....341
HF2....341
HG-223....231
HG-226....225
HG-227....226
HG-228....227
HG-2510....230
HG-4037....228
HG-4037....231
HG-4060 / HG-4061 232
HHP App....64
HR-100 UNC 248
HR-1000 CT....244
HR-1000 MCT 245
HR-1000 UNC / HR-1000 M 243
HR-1200 UNC / HR-1200 M 249
HR-125 241
HR-125 M 242
HS-21B /HS-22B - HS-23B....347
HS-262 / HA-261 / HA-262 / HA-263 348
ID-Tags 165
INSIGHT Software....60
IP10 / IP10J / IP10S / IP10H....263
IP5000 279
IPBC 270
IPBCF / IPBCNS....277
IPBG....285
IPBHZ....274
IPBK10 273
IPBSNZ....274
IPBTO10 280
IPBUZ / IPBUUZ....281
IPCC....284
IPDV 283
IPH10 / IPH10J 266
IPH10E 267
IPH10JE....267
IPHGUZ....270
IPHNM10 266
IPHOZ....268
IPNM10N /IPNB10P....264
IPPE10B / IPPE10BNM 269
IPPH 271
IPPHI 271
IPSBUUZ....282
IPSC10 279
IPSTARTEC11 278
IPTK / IPTKW / IPTKU / IPTKUM 275
IPTKA....276
IPU10 / IPU10J / IPU10S / IPU10H 262
IPU10A 265
IPVK 283
IPVUZ / IPVZ....273
J-452....351
K 155
KDN....155
KHL....156
KHL N....156
KHN L....156
KLZ....162
KLZ HDG....162
KSC N....155
KSS 155
L-1327....93
L-1339....174
L-160....334
L-160....336
L-160....338
L-170....334
L-170....336
L-170....338
L-320CN 96
L-320N / L-320 96
L-320R....209
L-322CN / L-322AN 98
L-3322B 99
L-562A 208
LBK / LKBK - Grade 10....123
LEBUS A-1W 293
LEBUS C-188 294
LEBUS L-140 291
LEBUS L-150 292
LEBUS L-150 294
LEBUS L-180 294
LEBUS R-10 291
Link Chain Nest 109
LKN / LKNK - Grade 10 125
LKN / LKNK / EKN - Spare Parts....132
LKNG - Grade 10....125
LKNG - Spare Parts....132
Loadblock Plus 72
LoadConnect Software 62
Loadlink Plus 67
Loadpin....71
LoadSafe 53
Loadshackle 69
Long Length Shank Hooks 110
Long Link LLU 164
Long Link LLZ....163
M Master Link 142
M-491 / G-491 342
MAGNEX....272
MF Master Link - Grade 10....143
MF Master Link - Grade 8....144
MF HDG Master Link....144
MFH Master Link 143

© 2023 The Crosby Group LLC. All Rights Reserved.

INDEX

MFX Master Link 144
MG / MGD 150
MG / MGD 150
Mid-link MLFU 164
Mid-link MLFZ 163
MIG 151
MIG - Spare Parts 167
Miniweigher Plus 73
MT Master Link - Grade 10 143
MT Master Link - Grade 8 144
N-411B / N-412B / N-413B 350
O-318 111
O-319 111
OBK - Grade 10 122
OBK - Grade 8 129
OBK / GBK - Spare Parts 131
OG 152
OG - Grade 8 159
OKE - Grade 10 125
OKE - Grade 8 128
OKN / EGKN / RH /ESKN - Spare Parts 132
Open Swivel Bail 108
P-301B / P-302B / P-303B 347
PL / PL-N/O Latch Kits 104
Plain Bore Oilfield Sheaves 308
Plaine Bore Sheaves 300
Q-681-Z / Q-682-Z / Q-683-Z 357
Quick Pin - Spare Parts 166
QUIC-TAG 38
Radiolink Plus 50
RDDLP - Spare Parts 258
RDGG 165
RDRLP - Spare Parts 258
RELP M / RELP UNC 253
RH Hook 220
RLP M / RLP UNC 254
Roller Bearing Sheaves 306
Running Line Dynamometer 57
S-1 116
S-1311N 178
S-1316 100
S-1316AH 102
S-1317 177
S-1318A 100
S-1325A 178
S-1326 101
S-13326 101
S-13326H 102
S-2 116
S-209T 37
S-2135 / S-2145 35
S-237 219
S-238 219
S-247 295
S-249 295
S-252 215
S-253 215
S-255 216
S-256 216
S-264 238
S-265 248
S-276 236
S-279 / M-279 237
S-280 213
S-281 214
S-287 218
S-3 116
S-315A 180
S-319 / S-319N 94
S-3316 114
S-3319 112
S-377 114
S-4 117
S-4088 105
S-409 200
S-412 201
S-421T 188
S-423T 190
S-4320 103
S-4338 177
S-5 117
S-501 198
S-502 199
S-505 196
S-506 200
S-6 117
S-600S / G600S 354
S-601S / G601S 354
S-602S / G602S 355
S-603S / G603S 355
S-643 140
SA-Shackle 45
SB-427 / SB-427TB 192
SHB Split Overhaul Ball 330
Short Link KLFU 164
Short Link KLFZ 162
SKA 157
SKA - Spare Parts 167
SKG 157
SKLI / SKLU 157
SKN / OKN /LKN - Spare Parts 132
SKO 158
SKR 158
SK-System 221
SKT 158
SL-150 UNC / SL-150 M 249
Sling ID Tag Kits 182
SLP 257
Spectrum 10 171
Spectrum 8 170
Split-Nut 316
SS-125 M 247
SS-125 UNC 246
SS-4055 105
Stailess Steel 730 / 750 45
Stainless Steel 735 / 755 / 732 44
Standard Length Shank Hooks 109
SubseaLink 66
Super 858 43
T-350C / T-350B / T-350R 348
T-390 / T-385 349
Tapered Bearing Sheaves 307
TD-13 290
TD-66 290
TD-92 290
Top Suspension Plates 156
Towcell® 58
TU-480 Series 319
UB-500 Series 326
UB-550E / UB -550S Overhaul Ball 331
UKN - Grade 8 130
UKN - Spare Parts 132
US-422T 189
Vitalife 191
Wireless Loadshackle 51
Wirelink Plus 68
WIRELOCK® 195
WLP 257
WRIN STR 127
WSL-320A 217

© 2023 The Crosby Group LLC. All Rights Reserved.

Decimal and Metric Conversion Table

Fractional Equivalent (in.)	Decimal Equivalent (in.)	Metric Equivalent (mm)
1/64	.0156	.397
1/32	.0312	.794
3/64	.0469	1.191
1/16	.0625	1.588
5/64	.0781	1.984
3/32	.0938	2.381
7/64	.1094	2.778
1/8	.1250	3.175
9/64	.1406	3.572
5/32	.1562	3.969
11/64	.1719	4.366
3/16	.1875	4.762
13/64	.2031	5.159
7/32	.2188	5.556
15/64	.2344	5.953
1/4	.2500	6.350
17/64	.2656	6.747
9/32	.2812	7.144
19/64	.2969	7.541
5/16	.3125	7.938
21/64	.3281	8.334
11/32	.3438	8.731
23/64	.3594	9.128
3/8	.3750	9.525
25/64	.3906	9.922
13/32	.4062	10.319
27/64	.4219	10.716
7/16	.4375	11.112
29/64	.4531	11.509
15/32	.4688	11.906
31/64	.4844	12.303
1/2	.5000	12.700

Fractional Equivalent (in.)	Decimal Equivalent (in.)	Metric Equivalent (mm)
33/64	.5156	13.097
17/32	.5312	13.494
35/64	.5469	13.891
9/16	.5625	14.288
37/64	.5781	14.684
19/32	.5938	15.081
39/64	.6094	15.478
5/8	.6250	15.875
41/64	.6406	16.272
21/32	.6562	16.669
43/64	.6719	17.065
11/16	.6875	17.462
45/64	.7031	17.859
23/32	.7188	18.256
47/64	.7344	18.653
3/4	.7500	19.050
49/64	.7656	19.447
25/32	.7812	19.844
51/64	.7969	20.241
13/16	.8125	20.638
53/64	.8281	21.034
27/32	.8438	21.431
55/64	.8594	21.828
7/8	.8750	22.225
57/64	.8906	22.622
29/32	.9062	23.019
59/64	.9219	23.416
15/16	.9375	23.812
61/64	.9531	24.209
31/32	.9688	24.606
63/64	.9844	25.003
1	1.0000	25.400

Mass Conversions

To convert from U.S. tons to metric tons multiply by .907185

To convert from metric tons to U.S. tons multiply by 1.10231

To convert from metric tons to pounds multiply by 2204.62

To convert from metric tons to kilograms multiply by 1000

To convert from pounds to kilograms multiply by .453592

To convert from kilograms to pounds multiply by 2.20462

Temperature Conversion

To convert from degree Fahrenheit to degree Celsius use

Tc=5/9 (Tf-32)

To convert from degree Celsius to degree Fahrenheit use

Tf=9/5 (Tc)+32

Crosby Quenched & Tempered® Fittings: Superior Quality & Reliability

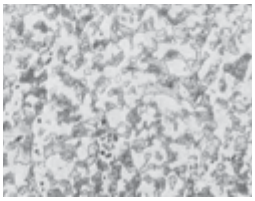

AS FORGED

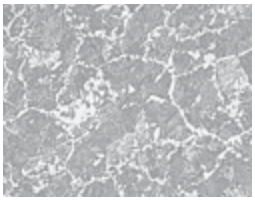

NORMALIZED

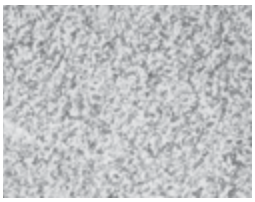

QUENCHED & TEMPERED

Unretouched Photomicrographs (100x) of fitting

Copyright © 2023 The Crosby Group LLC All Rights Reserved

the Crosby group

SAFETY.
RELIABILITY.
INNOVATION.

Trusted quality and unmatched value for more than 100 years.

thecrosbygroup.com

Crosby Group products distributed by

CÔNG TY CỔ PHẦN PHÁT TRIỂN KINH TẾ ĐÔNG NAM Á
ASEAN JSC.VN
ASEAN DEVELOPMENT JOINT STOCK COMPANY
ISO 9001:2015
Since 2006

9999585 R0122 15M