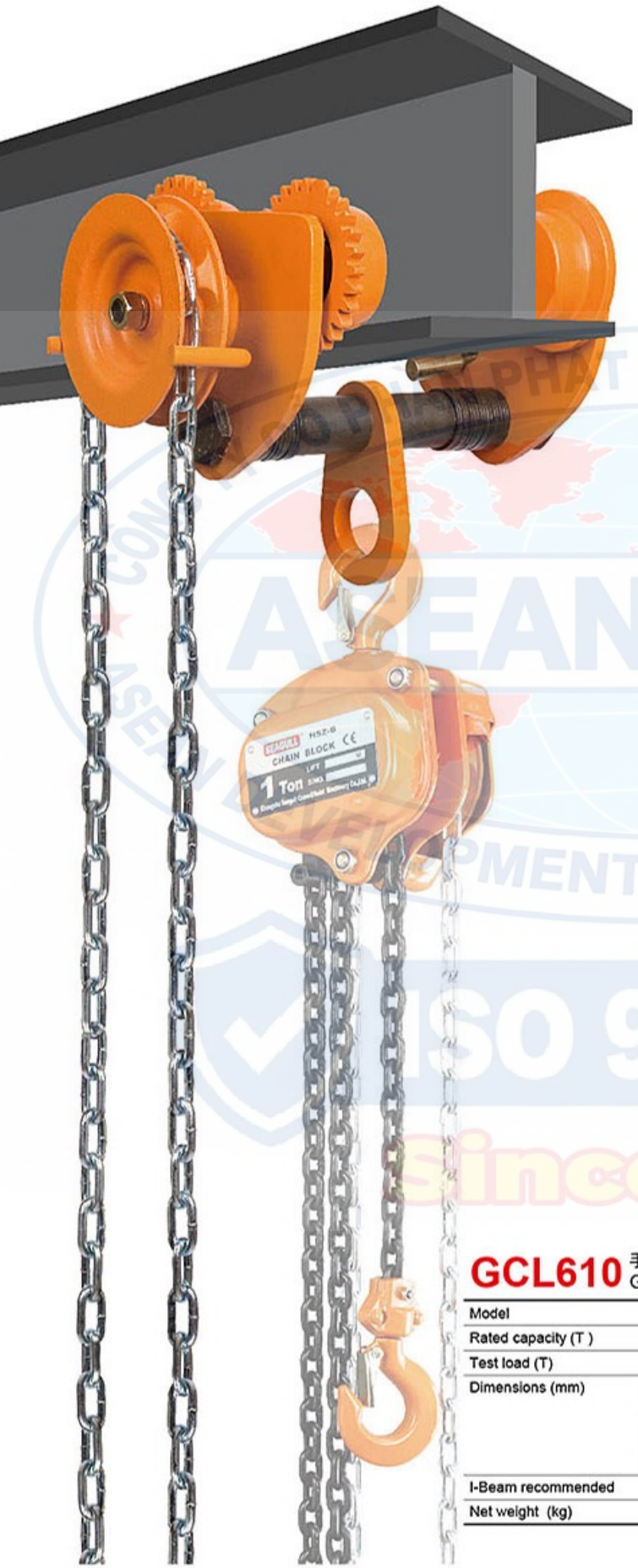

GEARED TROLLEY
手拉小车

GCL610

Features:

The manual trolley is heavy-duty side frames and fully machined wheel tread for a superior performance over a long life. Trolleys are equipped with Lifetime lubricated and precision ball bearings. Heavy rolled steel side frames extend beyond the wheels to provide these trolleys with superior strength, rigidity and added protection for the trackwheels. Units operate on universal wheel treads for use on flat or tapered beam flanges. Trolley wheels are fully machined from alloy cast iron and hardened for high strength and long life.

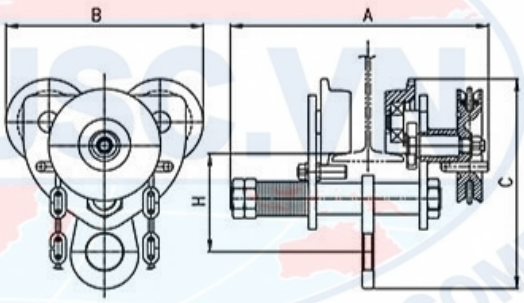



GCL610 手拉小车 GEARED TROLLEY

Model		0.5	1	1.5	2	3	5	10
Rated capacity (T)		0.5	1	1.5	2	3	5	10
Test load (T)		0.75	1.5	2.25	3	4.5	7.5	15
Dimensions (mm)	A	271	271	308	308	342	384	442
	B	172	206	231	240	279	318	380
	C	190	222	238.5	267	319	384	490
	H	108.5	122	130	132.5	181	219	275
I-Beam recommended		75-125	75-125	100-150	100-150	100-150	125-175	125-180
Net weight (kg)		8	12.5	15	16.5	23	37	68