

HAND WINCH
手动卷扬机

JC-C

Remarks: The rated capacity means the max. capacity when the winch to be winded the first layer of wire rope, and proportion decreased by adding numbers of layer of wire rope accordingly.

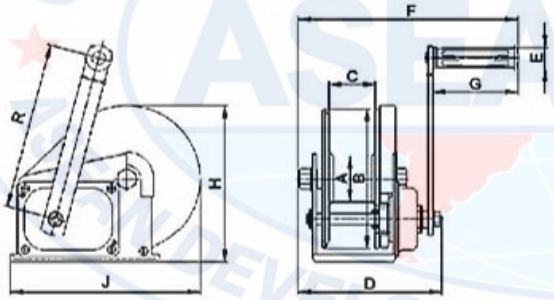



带钢丝绳，钩
with cable wire,hook



带尼龙绳，钩
with nylon rope,hook



不带绳，钩
no rope,hook



	Model	1200 lb	1800 lb	2600 lb
	Rated capacity (lb)	1200	1800	2600
	Test load (Kn)	8	12	17.5
	Transmission ratio	4.2:1	5:1	10:1
	Hand operated strength (N)	180	190	190
Dimensions (mm)	A	ф48	ф60	ф75
	B	ф134	ф180	ф180
	C	51	60	63
	D	157	190	209
	E	ф27	ф27	ф27
	F	273	288	307
	G	110	110	110
	H	156	203	216
	J	184	246	294
	R	208	319	319
	Net weight (no wire rope) (kg)	3.7	8.1	10.3