

RCW

OPEN RATCHET WRENCH (Straight Type)

▶ Features

- Optimal for tightening or removing flange nut of various pipe joints.
- Open and bite at the box wrench side.
- Use for final tightening.
- Ratchet mechanism included.

Item No.	Size (mm)						N.W. (g)
	Size name	L	D	D1	T	T1	
RCW10	10	154	21.0	17.0	10.0	5.5	55
RCW12	12	170	25.4	21.0	11.0	6.3	90
RCW13	13	177	27.5	23.0	11.0	6.7	110
RCW14	14	186	29.3	24.5	12.0	7.3	125
RCW17	17	223	36.2	29.5	12.5	8.2	210
RCW19	19	248	40.0	33.0	13.0	8.8	280
RCW22	22	298	45.7	37.5		9.5	390
RCW24	24	333	51.8	42.0	15.0	10.3	570
RCW27	27	343	56.5	47.0	15.5	10.7	700

RCW-F

OPEN RATCHET WRENCH (Flex Type)

▶ Features

- Optimal for tightening or removing flange nut of various pipe joints.
- Open and bite at the box wrench side.
- Use for final tightening.
- Ratchet mechanism included.

Item No.	Size (mm)						N.W. (g)
	Size name	L	D	D1	T	T1	
RCW10F	10	154	21.0	17.0	10.0	5.5	55
RCW12F	12	170	25.4	21.0	11.0	6.3	90
RCW13F	13	177	27.5	23.0	11.0	6.7	120
RCW14F	14	186	29.3	24.5	12.0	7.3	125
RCW17F	17	223	36.2	29.5	12.5	8.2	230
RCW19F	19	248	40.0	33.0	13.0	8.8	310
RCW22F	22	298	45.7	37.5		9.5	430
RCW24F	24	333	51.8	42.0	15.0	10.3	620
RCW27F	27	343	56.5	47.0	15.5	10.7	780

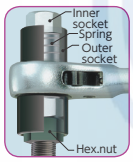

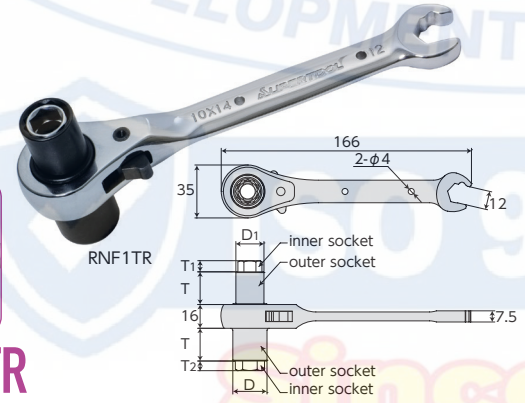

RNF-TR

5 SIZE RATCHET WRENCH PAT.

▶ Features

- When outer socket is used, inner socket is pushed up easily, and after the use, the inner socket returns to the original position by spring.
- The spanner end (12mm) also comes with a ratchet mechanism.
- Suitable for plumbing work, duct work, electric facility work, building construction and work on any kind of facilities.

Item No.	Size name (mm)		Size (mm)					N.W. (g)
	Inner socket	Outer socket	D	D1	T	T1	T2	
RNF0TR	8 10	13 14	18.9	18.2	19.5	7	6	250
RNF1TR	10 13	14 17	23	18.9	22	7.5	6.5	270

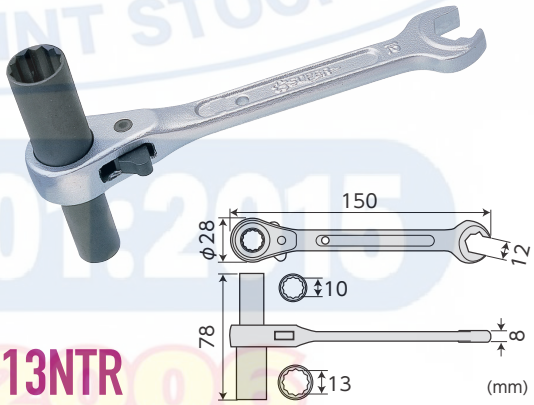

RN1013NTR

QUICK TURN WRENCH FOR PIPE SUSPENDER

▶ Features

- Long sockets with ratchet mechanism.
- The spanner end (12mm) also comes with a ratchet mechanism.

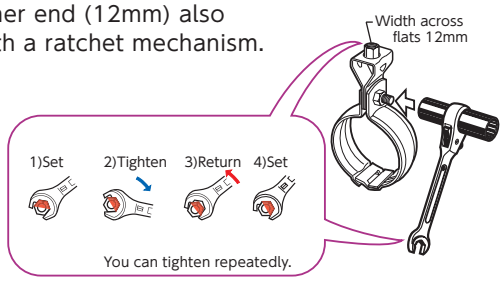

Item No.	10	13	N.W. (g)
RN1013NTR	M6·1/4	M8	200

●For all the appendix of the piping tools, please refer to P.283