GVC-E

LATERAL LIFTING CLAMP (Lock Handle Type with Universal Shackle)

Cam cross type, normal pitch Pad line type

▶ Features

- For lateral (horizontal) lifting of steel beams for structure (H beam, I beam, T beam, L beam, etc.) and flat steel bars.
- The universal shackle and the arc-shaped pad provide a stable lateral (horizontal) clamping force (universal shackle type).
- The spring-type tightening lock mechanism assures a positive initial clamp force (lock handle type).

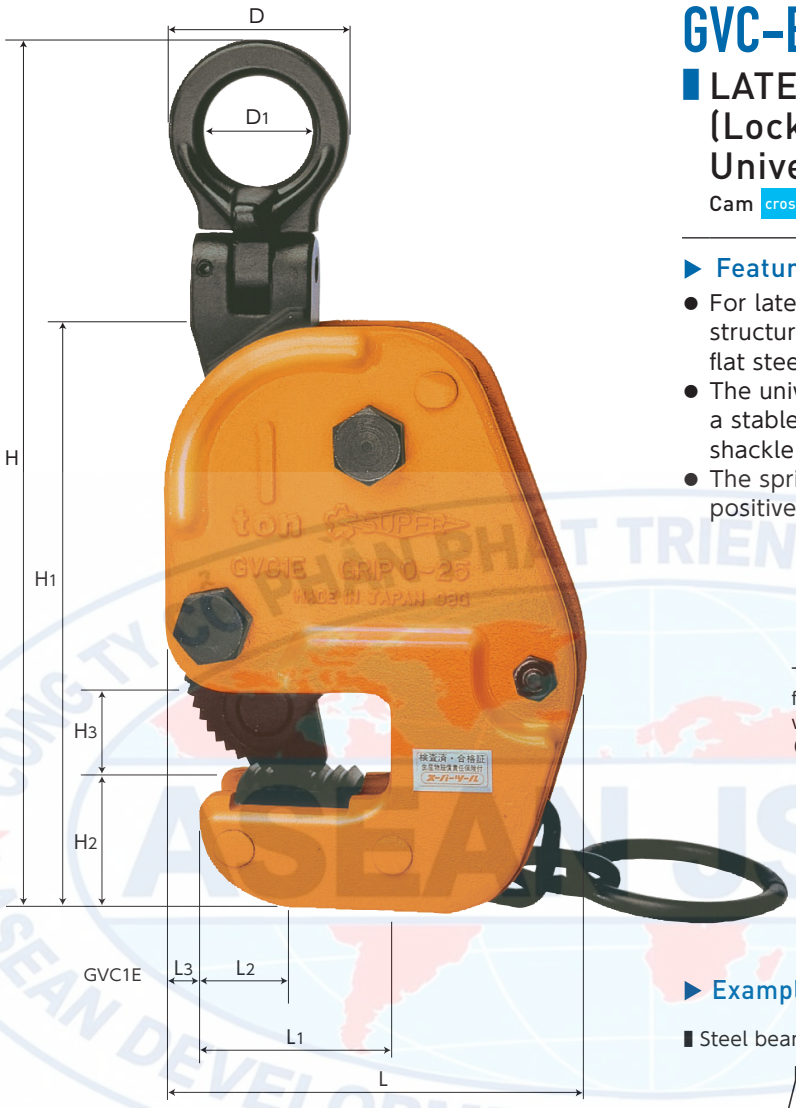

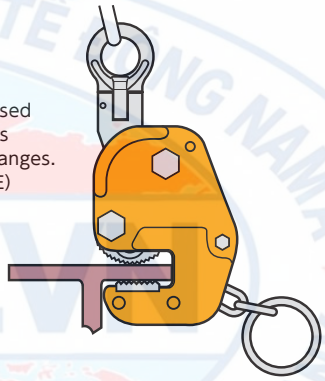

This clamp can be used for clamping I beams with 100mm wide flanges. (GVC0.35E,GVC0.5E)

▶ Example of use ⚠ Always lift a load at 2 or more points for safety.

▮ Steel beam lifting

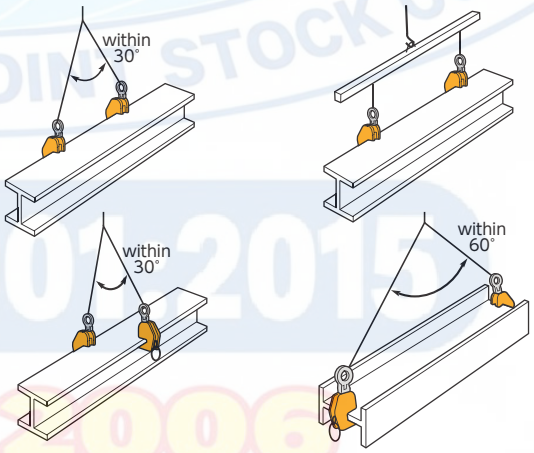

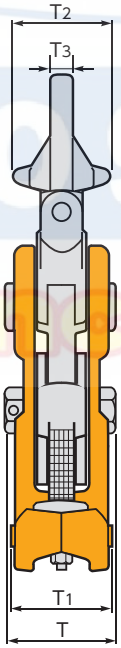

▮ Steel plate lifting

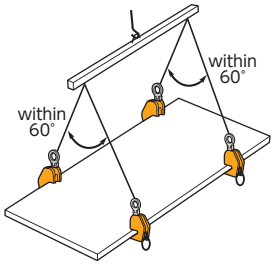

▮ Steel beam turning-over

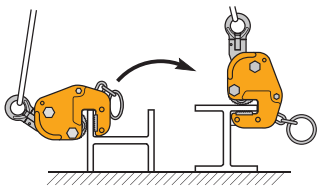

Cam : cross type, normal pitch (P=3.0)



Pad : line type



Item No.	Rated capacity (ton)	Clamp range (mm)	Size (mm)														N.W. (kg)
			L	L1	L2	L3	H(MAX)	H1	H2	H3	D	D1	T	T1	T2	T3	
GVC0.35E	0.35	0~16	87	42	21	6	191	120	26	19	45	26	51	41	39	8	1.7
GVC0.5E	0.5	0~20	103	47	20	6	229	145	34	23	52	30	55	45	45	10	2.6
GVC1E	1	0~25	130	62	26	10	276	183	40	28	60	35	64	52	53	12	4.5
GVC2E	2	5~35	163	70	27	12	343	222	50	38	76	45	79	63	67	14	9

★The product parts list and operation manual can be downloaded from our website.

●For all the appendix, please refer to P.284~286