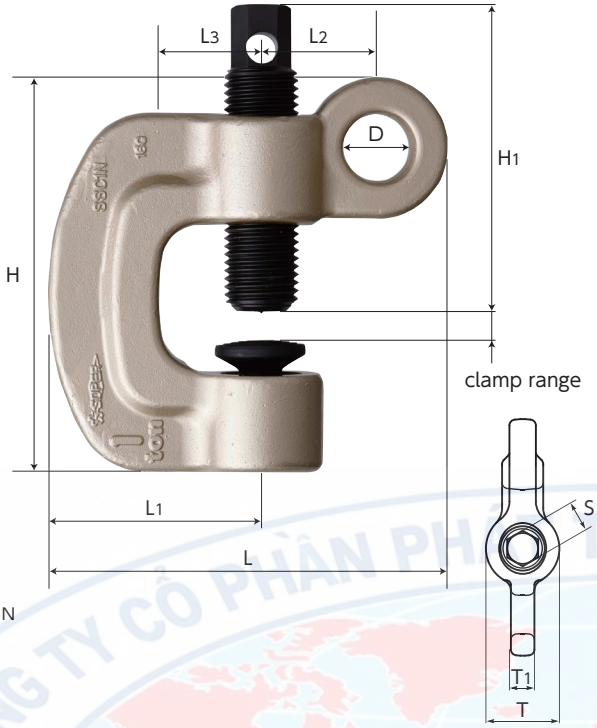

SSC1N

SSC-N

SCREW CAM CLAMP (Single Eye Type) PAT.

▶ Features

- Ideal clamp for lifting up and down, and especially suitable as lifting piece for chain blocks or hoists.
- When used in horizontal lifting, the screw is placed on top (operator's side), so the tightening operation can be done easily (when installing underneath a beam, the tightening can be done on the operator's side).
- The circular cam has a mechanism with a spring making it always return to its original position.

▶ Accessories

- 17x21 Double Size Ratchet Wrench (Short Type)

▶ Example of use

⚠ Always lift a load at 2 or more points for safety.

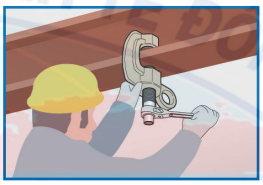

Item No.	Rated capacity (ton)	Clamp range (mm)	Size (mm)										N.W. (kg)
			L	L1	L2	L3	H	H1	D	T	T1	S	
SSC0.5N	0.5	0~25	129.5	68	39	30	122	89	22	46	16	21	1.8
SSC1N	1	0~40	161.0	88	45	40	156	121	26	50	18	21	3.2
SSC2N	2	0~40	186.0	100	53	40	170	121	32	60	28	21	5.0

Note : For the torque value of the screw tightening, operate tightening over 25N·m (approx. 250kgf·cm).

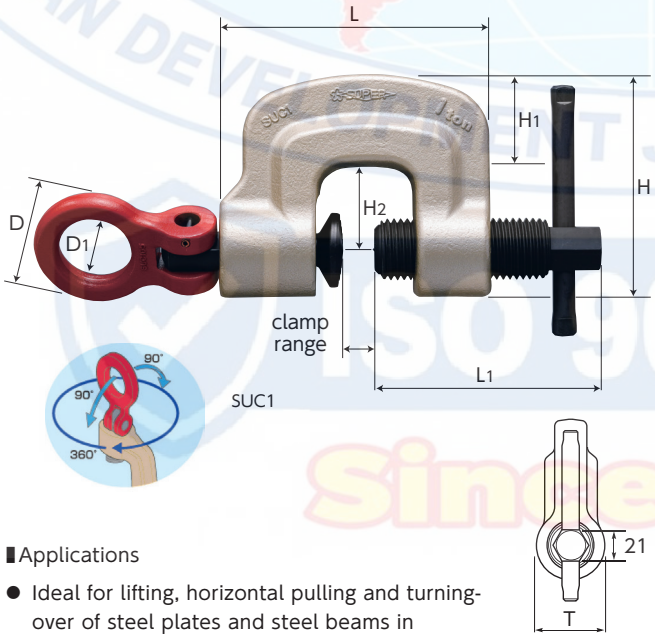

SUC1

SUC

SCREW CAM CLAMP (Universal Shackle Type) PAT.

▶ Features

- The shackle turns at 360° in all lifting or pulling directions, enabling a stable lifting angle and a wide range for pulling operations.
- The screw and the circular cam provide sure clamping force.
- The cam tilts and the clamping force increases in proportion to the load weight in the lateral direction.
- The circular cam has a mechanism with a spring making it always return to its original position.

▮Applications

- Ideal for lifting, horizontal pulling and turning-over of steel plates and steel beams in industries like civil engineering, construction, shipbuilding, can manufacturing industry.
- Also most suitable as light-weight and compact type for lifting down chain blocks or hoists as a jig, or horizontally pulling structural steel.

Item No.	Rated capacity (ton)	Clamp range (mm)	Size (mm)								N.W. (kg)
			L	L1	H	H1	H2	D	D1	T	
SUC0.5	0.5	0~25	119.5	89	91	38	30	60	35	46	2.4
SUC1	1	0~30	129.5	109	108	45	40				3.0
SUC1.6	1.6	0~30	132.5		110			75	45	50	3.7
SUC3.2	3.2	0~40	165	136	130	55	45	80	50	60	6.0

Note : For the torque value of the screw tightening, operate tightening over 25N·m (approx. 250kgf·cm).

★The product parts list and operation manual can be downloaded from our website.

●For all the appendix, please refer to P.284~286