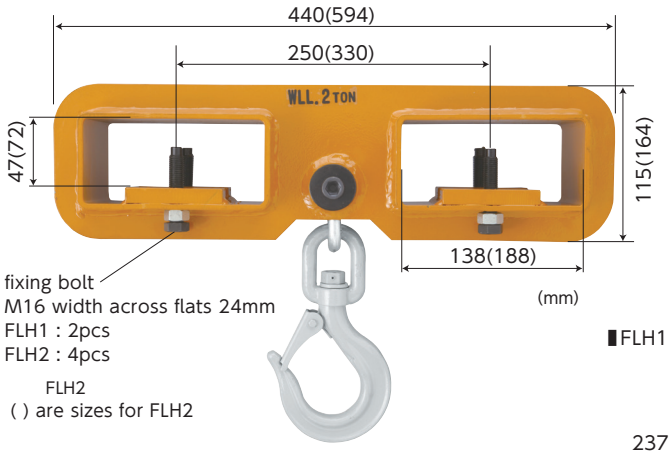

FLH

LIFTING HOOK FOR FORKLIFT

▶ Features

- Balance with hook dedicated to forklifts.
- Can be used immediately just by setting to the forklift jaws.
- Fixing can be done very simply by tightening the fixing bolts.
- The swivel hook with latch allows free hook direction and prevents vibrations.

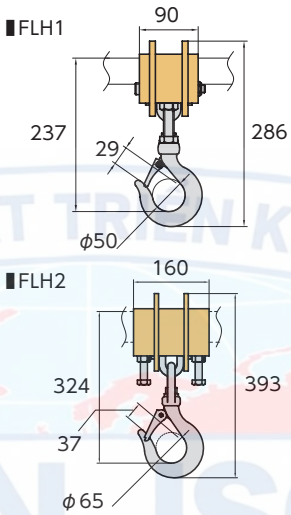



▶ Example of use



Item No.	Rated capacity (ton)	Applicable forklift claw size (mm)		N.W. (kg)
		Width	Thickness	
FLH1	1	70~120	15~40	12
FLH2	2	120~150	38~65	24

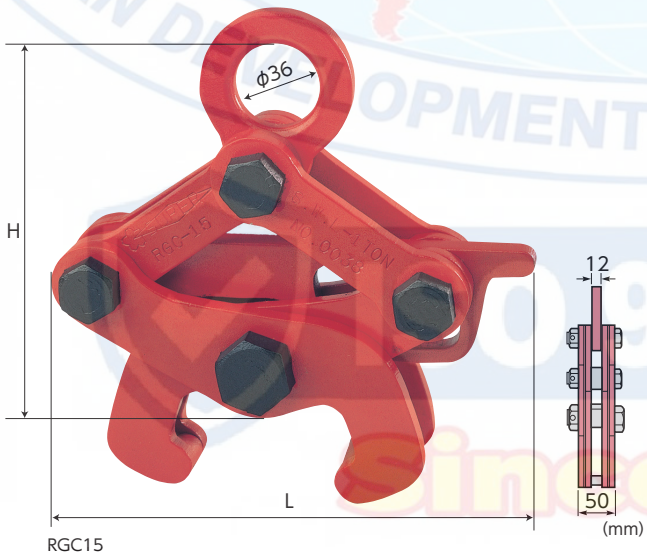

RGC

RAIL CLAMP

▶ Feature

- Clamp dedicated to various types of rail for railroads.

TIGHTENING AND RELEASING LOCK MECHANISM

▮Releasing lock mechanism

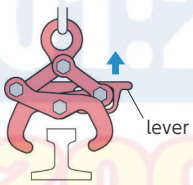

Position the clamp above the rail as shown in the drawing. Pull the shackle while raising the lever to tighten the clamp.

▮Tightening lock mechanism

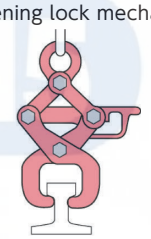

When the lever is released, the tightening lock is set automatically, and you can lift the rail as shown in the drawing.

⚠ Always lift a load at 2 or more points for safety.

Item No.	Rated capacity (ton)	Applicable rail (Nominal)	Application	Size (mm)		N.W. (kg)
				H	L	
RGC10	1	6kg rail 9kg rail 10kg rail	Rails for civil engineering trolley	198	205	5
RGC15	1	12kg rail 15kg rail 22kg rail		198	205	5
RGC30	1	30kg rail 37kg rail	Small to medium railroad rails	198	205	5

Item No.	Rated capacity (ton)	Applicable rail (Nominal)	Application	Size (mm)		N.W. (kg)
				H	L	
RGC50	1	40kgN rail 50kg rail 50kgN rail 60kg rail	Small to medium railroad rails Railway, subway and major railroad rails Shinkansen rails	198	205	5
RGC75	1	CR73K rail CR74K rail	Crane rails CR-73K (old size rails)	228	254	6
RGC100	1	CR100K rail CR101K rail	Crane rails CR-100K (old size rails)	234	264	6

★The product parts list and operation manual can be downloaded from our website.

●For all the appendix, please refer to P.284~286