

AMC-N • AMB-N

UNIVERSAL LIFTING CLAMP FOR CONCRETE MATERIAL Adjustable Clamp Range Type (Pad Type)

▶ Features

- Universal Clamp for lifting all kinds of concrete materials.
- Especially ideal for pedestrian road boundary blocks and small L shaped panels.
- By changing the pad position, you can adjust the clamp range to wide workpiece.
- By adjusting the shackle above the center of gravity of the workpiece, you can keep the balance of the workpiece.
- The spike design of the special rubber pads allows to grip firmly the load (can also be used as non-marring type).
- The open lock can be locked manually for smooth remove of the lifting piece.
- With the optional parts (sold separately), you can connect two clamps.

∗ Do not use with drop-lid type U shaped gutters. The rated capacity (kg) changes with the shackle position.

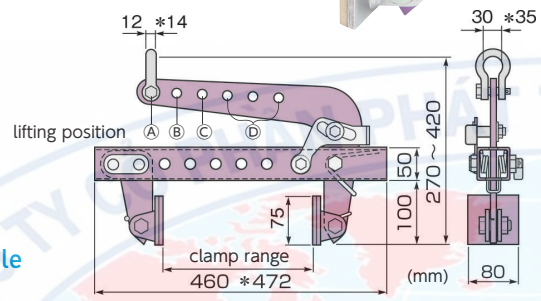

Note : ∗ are dimensions for AMC500N

▶ Example of use

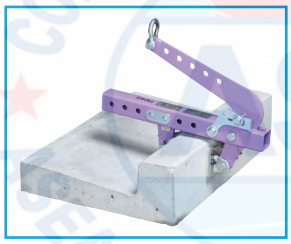

▮Optional parts (sold separately)

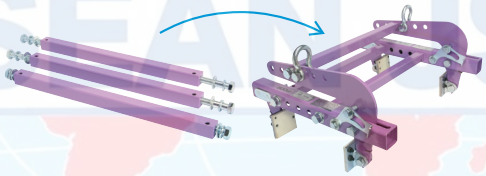

∗ The rated capacity of the connected clamps is equal to the sum of each clamp rated capacity.

Optional parts item No.
AMB250N
AMB500N

Item No.	Rated capacity (kg) by lifting position				Clamp range (mm)	N.W. (kg)
	Ⓐ	Ⓑ	Ⓒ	Ⓓ		
AMC250N	140	165	200	250	10~240	5.5
AMC500N	280	330	400	500	10~240	7.5



LSB2H

BALANCE (Adjustable Span Type, with Upper Wire Rope and Ring)

▶ Features

- Ideal for safe, well balanced lifting operations.
- When lifting or holding balance of a long workpiece, this balance can be used safely with lifting clamps.
- Adjustable span type with 8 steps from 450 to 800mm, adapted to long or large workpieces.

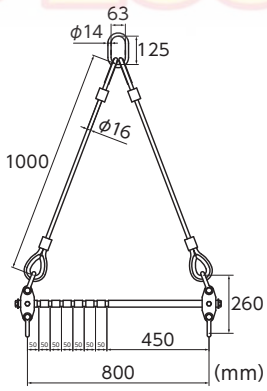

▶ Example of use

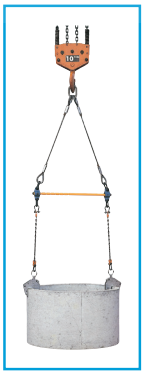

Item No.	Rated capacity (kg)	Adjustable span steps (mm)	N.W. (kg)
LSB2H	2000	450·500·550·600·650·700·750·800	20

★The product parts list and operation manual can be downloaded from our website.