BUC1000A • BUM1000A • BUF1000A

AUTOMATIC INTERNAL EXPANDING LIFTING CLAMP FOR U SHAPED GUTTER (Pad Type with Wire Rope and Ring)

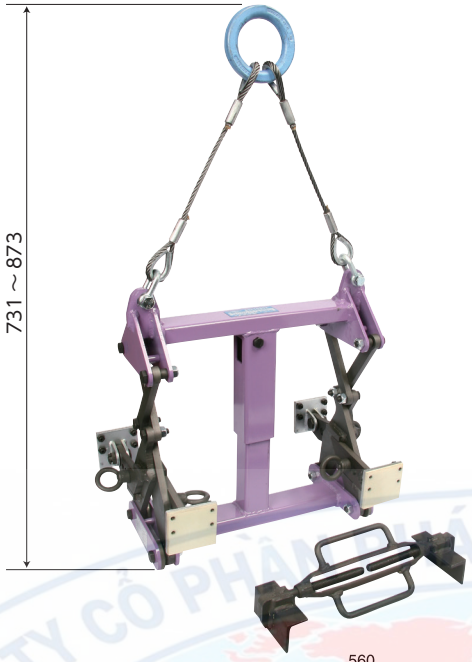

▶ Features

- Dedicated for lifting all kinds of concrete U shaped gutters (automatic setting and removing type).
- Including a holder for preventing the cracking of U shaped gutter (always use together with the main body).
- With the fully automated setting / removing mechanism, the repeated handling operations gets faster and easier, bringing higher productivity.
- The spike design of the special rubber pads allows to grip firmly the load (can also be used as non-marring type).
- The inside clamping avoids touching the alignment levelling strings, and makes unnecessary to leave a clearance space outside the workpiece.

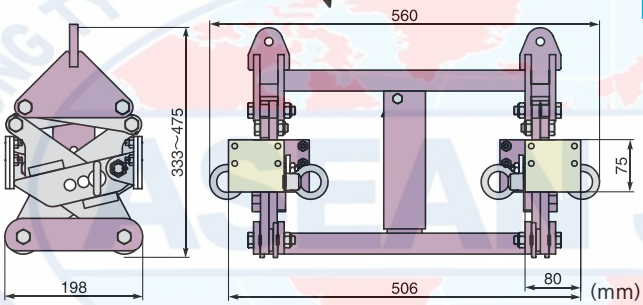

▶ Example of use

⚠ For long gutters, always use a balance and lift at 2 or more points for safety.



▮Master ring, wire rope

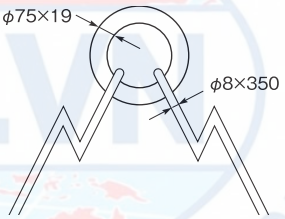

▮Cracking prevention holder

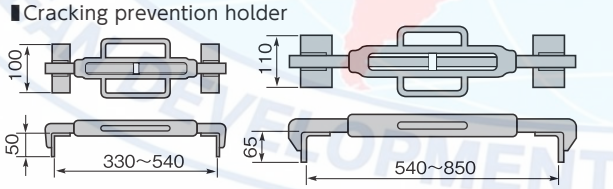

Crack prevention small　　Crack prevention large　(mm)

Item No.	Rated capacity (kg)	Clamp range (mm)	U shaped gutter size name	N.W. (kg)
BUC1000A	1000	①210~250	240·250	26
		②250~290	300	
		③290~330	—	

▮Automatic setting / removing mechanism

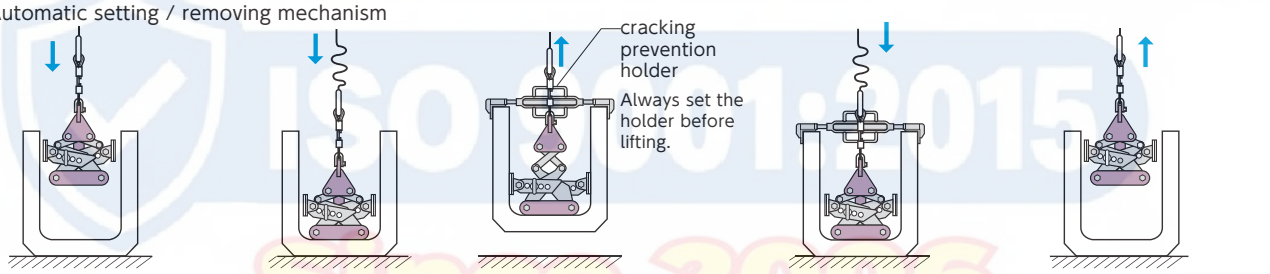

1)Land slowly the clamp in releasing lock position until the bottom of the gutter.

2)Hoist down until the wire rope is completely loosened.

3)When the load is lifted, the clamp gets automatically into tightening position.

4)Hoist down until the wire rope is completely loosened.

5)When the clamp is lifted again, it gets automatically into releasing lock position and the clamp alone is lifted.

▮BUM1000A middle parts set (sold separately)
(middle plate with pad, crack prevention large holder)



▮BUF1000A full parts set (sold separately)
(middle plate with pad, long plate with pad, crack prevention large holder, joint bar)



Item No.	Middle plate			Long plate		
	Clamp range (mm)	U shaped gutter size name	N.W. (kg)	Clamp range (mm)	U shaped gutter size name	N.W. (kg)
BUM1000A	①320~360	350·360	28	—	—	—
	②360~400	400		—	—	
	③400~440	450		—	—	
	④440~480	500		—	—	
BUF1000A	①320~360	350·360		①480~520	500	31
	②360~400	400		②520~560	600	
	③400~440	450		③560~600	—	
	④440~480	500		—	—	—

＊ The clamp range ①~④ can be changed by adjusting the position of the adjustment plate holes.

★The product parts list and operation manual can be downloaded from our website.