KBC500WH

BATCH LIFTING CLAMP FOR BANK BLOCK (with Wire Rope and Ring)

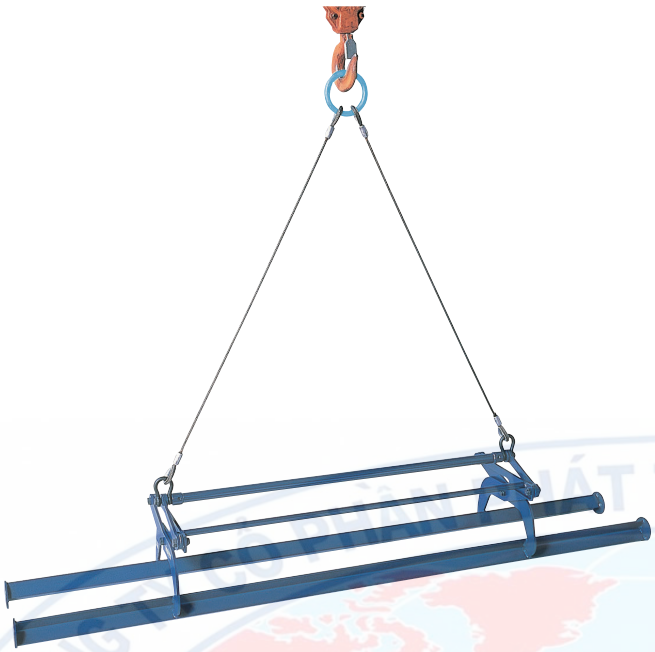

▶ Features

- Dedicated for lifting bank blocks with necks.
- Can lift together in one batch up to 7 bank blocks. Ideal for handling, loading and unloading operations.
- The automatic opening mechanism allows easy clamp removing operation.

▶ Example of use



Shape of applicable blocks
Bank blocks with necks.
Max. 7 pieces.

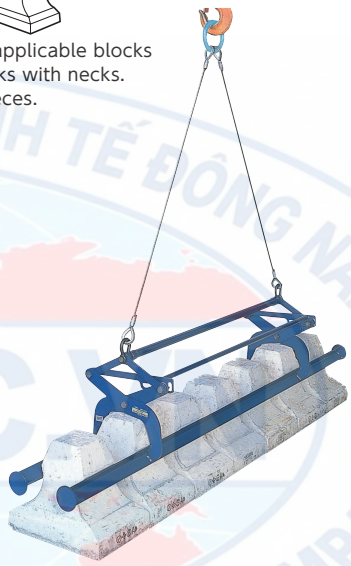

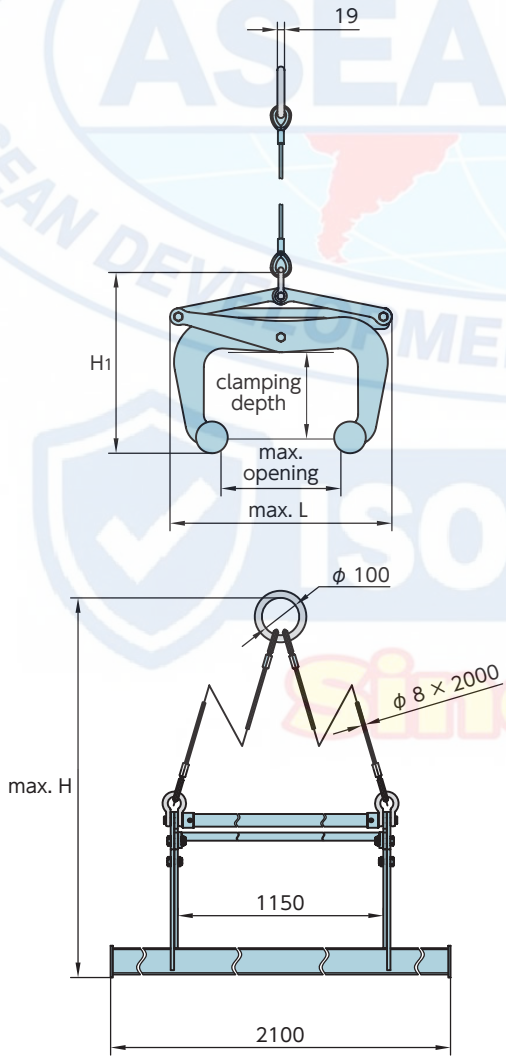

Automatic releasing mechanism

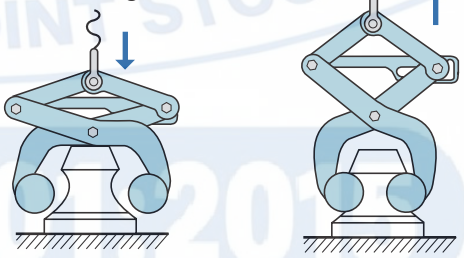

1)Set the stopper in release position, lower the clamp so that the legs of the tongs properly fit into the bank block neck.

2)When the legs are fully set, remove the stopper and lift the clamp so that the legs close and the bank block gets lifted.

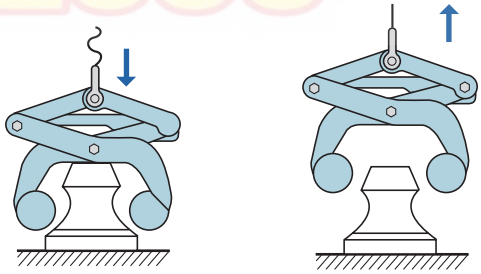

3)Move the load to the target place and land it until the wire rope is completely loosened.

4)The stopper gets locked automatically into the release position and then you can lift the clamp alone.

Item No.	Rated capacity (kg)	Clamp range (mm)	Size (mm)					N.W. (kg)
			(max. opening)	(clamping depth)	L (MAX)	H (MAX)	H1	
KBC500WH	500	60~270	300	230	600	2780	484~760	48

★The product parts list and operation manual can be downloaded from our website.