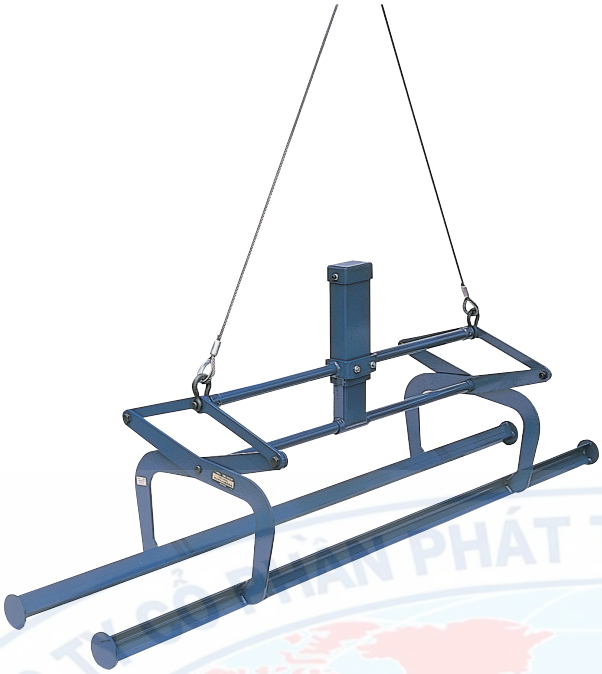

KBC500WA

AUTOMATIC BATCH LIFTING CLAMP FOR BANK BLOCK (with Wire Rope and Ring)

▶ Features

- Dedicated for lifting bank blocks with necks.
- Can lift together in one batch up to 7 bank blocks. Ideal for handling, loading and unloading operations.
- The automatic setting / removing mechanism allows operations with one operator. The workability is greatly improved compared to conventional manual clamp types.

▶ Example of use



Shape of applicable blocks
Bank blocks with necks.
Max. 7 pieces.



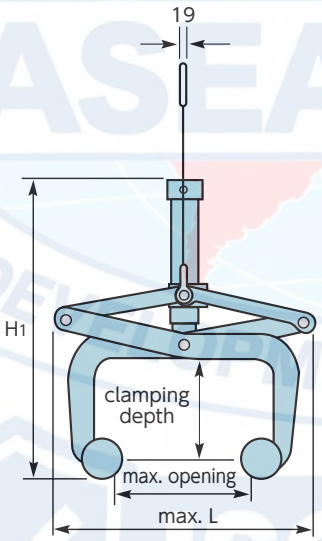

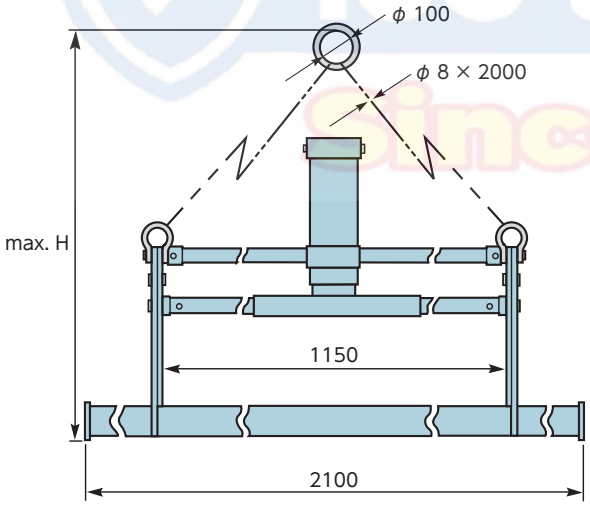

▮Automatic setting / removing mechanism

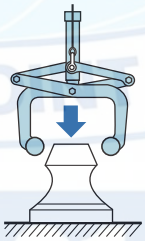

1)As a preparation before lifting, lift the clamp in release position.

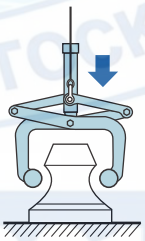

2)Lower the clamp slowly so that it stay aligned with the center of the block until the clamp main body and the guide pipes touch the block and keep lowering until the wire rope is completely loosened.

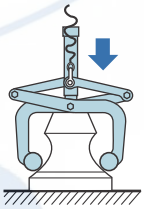

3)Stabilize the clamp horizontally on the block.

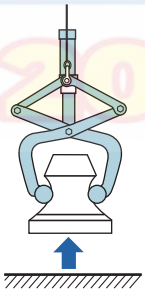

4)When the load is lifted, the clamp gets locked automatically into tightening position and grips firmly the bank block.

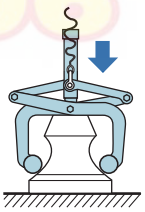

5)Move the load to the target place and land it until the wire rope is completely loosened.

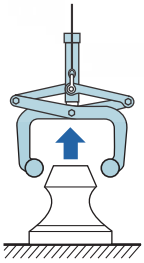

6)When the clamp is lifted, it gets locked automatically into release position so that you can move the clamp alone and switch smoothly to the next operation.

By repeating procedures 1)~5), transportation of bank blocks batches can be quickly operated just by moving laterally and hoisting up and down the crane.

Item No.	Rated capacity (kg)	Clamp range (mm)	Size (mm)					N.W. (kg)
			(max. opening)	(clamping depth)	L (MAX)	H (MAX)	H1	
KBC500WA	500	60~270	300	230	600	2810	700~1010	56

 ★The product parts list and operation manual can be downloaded from our website.