

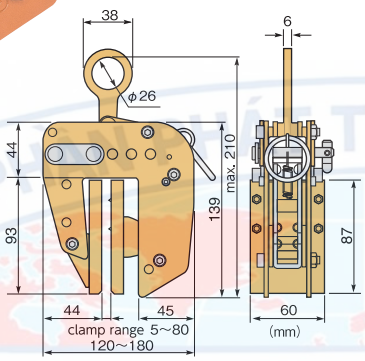

PTC100

LIFTING CLAMP FOR FORMWORK / PANEL (Ultra-light-weight and Compact Type)

▶ Features

- Ideal for lifting and installing formwork and wooden panels.
- The spring-type tightening lock mechanism assures a positive initial clamp force.
- The tightening lock can be released remotely, avoiding dangerous operations in high places.
- The urethane pad with spikes on one side ensures a firm grip, for even safer operation.
- The two pads come with urethane rubber to prevent scratches on the panel surface.

Remotely controllable opening mechanism included

Also usable for soundproof walls

Applicable loads : Siding boards, decoration panels for outer walls, external heat insulating wall materials, wooden panels, etc.
∗ Do not use for ALC panels, extruded cement panels.

▶ Accessories

- Rope for remote control (1.5m) included

▶ Example of use



⚠ Always use this clamp in pair with a balance.

Item No.	Rated capacity (kg)	Clamp range - 5 steps adjustment (mm)	N.W. (kg)
PTC100	100	5~20 20~35 35~50 50~65 65~80	1.8



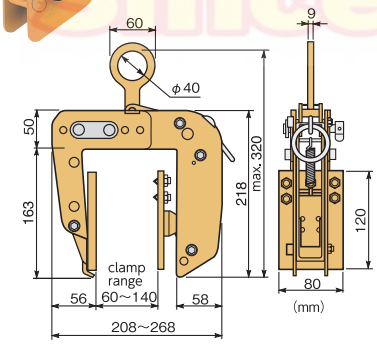

PTC150

LIFTING CLAMP FOR PANEL / BEAM (Wide Type)

▶ Features

- Ideal for lifting and installing wooden panels, 2 × 4 housing panels and for lifting and moving wooden beams.
- The tightening lock can be released remotely, avoiding dangerous operations in high places.

∗ Do not use for ALC panels, extruded cement panels.

Remotely controllable opening mechanism included

Also usable for soundproof walls

▶ Accessories

- Rope for remote control (1.5m) included

▶ Example of use

⚠ Always use this clamp in pair with a balance.

▮Panel lifting



▮Wooden beam lifting



Item No.	Rated capacity (kg)	Clamp range - 4 steps adjustment (mm)	N.W. (kg)
PTC150	150	60~ 80 80~100 100~120 120~140	3.6

 ★The product parts list and operation manual can be downloaded from our website.