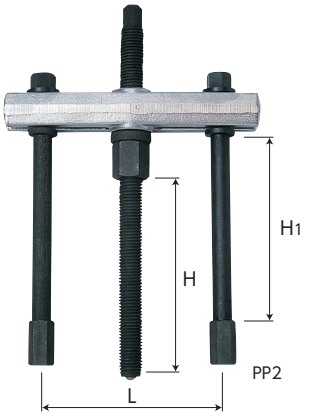

PP

PUSH PULLER (Heavy Duty Type for Professional Use)

▶ Feature

- Setting this push puller with a bearing separator allows even more applications.

Item No.	Size (mm)			Guaranteed load (kN)	Set N.W. (kg)
	L	H Max.	H1		
PP2	65~200	223	150	100	2.7
PP4	90~330	233	245	200	7

Parts

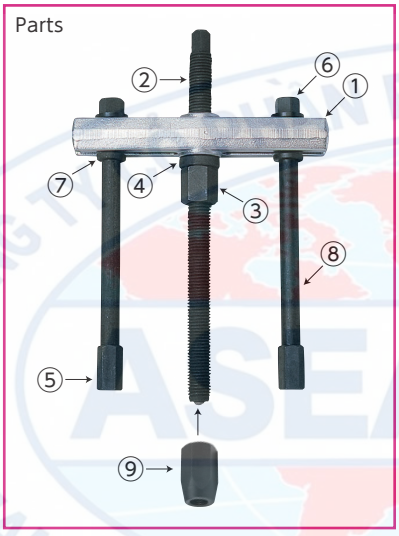

PPB • PPS • PPU • PPZ • PCU • PSU • PSZ • PPA • PSN • PPN

BEARING PUSH PULLER SET Parts



PPB2

Body (①)

Item No.
PPB2
PPB4



PPS2

Forcing screw (②)

Item No.	Size (mm)	
	Screw diameter (30° trapezoidal thread)	Full length
PPS2	TM20×2.5	305
PPS4	TM28×3	340



PPU2

Hex nut for forcing screw (③)

Item No.	Size (mm)	
	Screw diameter (30° trapezoidal thread)	Hex width across flats
PPU2	TM20×2.5	27
PPU4	TM28×3	36

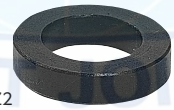

PPZ2

Washer for forcing screw (④)

Item No.
PPZ2
PPZ4

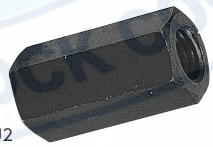

PCU2

Coupling nut (⑤)

Item No.	Size (mm)	
	Screw dia.	Hex width across flats
PCU2	M12	19
PCU4	M16	24

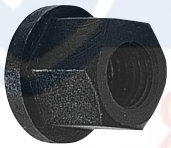

PSU2

Nut with washer for stud bolt (⑥)

Item No.	Size (mm)	
	Screw dia.	Hex width across flats
PSU2	M12	19
PSU4	M16	24

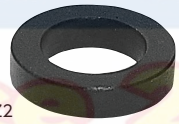

PSZ2

Washer for stud bolt (⑦)

Item No.
PSZ2
PSZ4

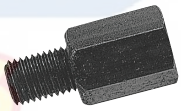

PPA1

Ring adaptor

Item No.	Applicable model	Size (mm)	
		Screw dia.	Hex width across flats
PPA1	for BS1·1S	M12×M10	19

* Required only when using a bearing separator.



PSN2150

Stud bolt (1 pc) (⑧)

Item No.	Screw diameter × length (mm)
PSN2125	M12×125
PSN2150	M12×150
PSN4115	M16×115
PSN4245	M16×245
PSN4420	M16×420



PPN2

Adaptor for forcing screw (⑨)

Item No.	Size (mm)	
	Forcing screw side dia. (30° trapezoidal thread screw)	Connection side dia. (metric coarse thread screw)
PPN2	TM20×2.5	M16
PPN4	TM28×3	M20